INVITATION TO BID

CITY OF JOHNSON CITY, TENNESSEE
PURCHASING DEPARTMENT
423/975-2716

Bid Name / Number	***RE-ROOF HARRIS PAVILION AT ROTARY PARK* / #5675**
Due Day / Date / Time	***Wednesday* / January 30, 2013 / 1:30 PM**
Bid Location / Mail Address	Johnson City Purchasing Department, Debbie Dillon-Director, 209 Water Street (37601), P O Box 2150 (37605), Johnson City, TN
Bid Contact / Telephone	Teresa Taylor (423) 483-5856; tgtaylor@johnsoncitytn.org or vharless@johnsoncitytn.org
Bid Issue Date	January 14, 2013
Project Location	Rotary Park, 1001 North Broadway Street, Johnson City, TN 37601
FOB	Destination, Johnson City, TN
Payment Terms	Net 30

Bidder is responsible for completing the remaining portion of this bid document

ITEM NO.	QTY	DESCRIPTION	UNIT PRICE	TOTAL
		Provide all labor, materials & equipment as necessary (except for those on attached list) for the re-roof of Harris Pavilion at Rotary Park as per the attached instructions, drawings, Truss shop drawings, and on-hand materials list which are an integral part of this bid.	$_____/lump sum	

Project timeline proposed: _____
Completion by April 1st is preferred. Award anticipated on February 22, 2013

BID SUBMITTALS:
CONTRACTORS BID ENVELOPE FORM.
BID BOND REQUIRED
COMPLETED INSURANCE CHECKLIST & GENERAL CONTRACT FORM.
COPY OF STATE CONTRACTOR'S LICENSE

Bidder's Check List Place a check mark ✓ by all areas to signify compliance.

_____Bid signed in ink by authorized company representative
_____Addenda initialed and returned with bid, if applicable
_____Bid prices, extensions and total verified as correct
_____Completed insurance checklist & General Contract Form

By signing this document, the undersigned hereby agrees to the prices and all other terms and conditions, including the attached Bid/RFP General Terms & Conditions and the City's Requirements for Bids, Requests for Proposals, and Contracts Between the City of Johnson City and Other Parties contained in this bid and associated documents relating to this bid and will furnish items as specified if this bid is accepted.

SUBMITTAL INSTRUCTIONS:
Place signed bid response in a sealed envelope plainly identified on the outside in the lower left corner with the Bid Name and Number. Vendor responsible for delivery to Johnson City Purchasing Dept., Debbie Dillon-Director, P. O. Box 2150 (37605), 209 Water Street (37601) Johnson City, TN on or before the bid opening date and time.

ELECTRONIC RESPONSES ARE NOT ACCEPTABLE AT THIS TIME

Firm Name_____

By_____
TYPED & SIGNED

Address_____

_____

Telephone_____

Fax_____

E-Mail_____

BID MUST BE SIGNED TO BE VALID

RE-ROOF HARRIS PAVILION AT ROTARY PARK
BIDDERS INSTRUCTIONS

1. SCOPE OF WORK

1.1 The Contractor shall provide all labor, materials, equipment, supervision and supplies as required to remove and repair roof, gables, ceiling deck & gutter system on Harris Pavilion at Rotary Park; 1001 North Broadway Street; Johnson City, TN 37601. This is consisting of the following specifications:

1.2 All security lights on roof area to be removed and disposed properly. To remove added weight from existing roof, all old shingles and felt paper are to be removed and disposed of properly. All gutter and down-spouts will be removed and set aside for re-installation later in project. Rotten and damaged fascia boards will be replaced. All rotten or damaged sheeting on existing roof will be replaced. Any structural damage to roof will be repaired. All rotten or damaged wood to underside of roof deck to be replaced.

1.3 Set new trusses (furnished by the City) on existing roof and brace properly. Install new sheeting, felt paper, and new shingles. Install a continuous ridge vent and, under gable ends of pavilion, diagonal braces are to be installed for additional support. Also under gable ends below deck ceiling, soffit will be installed acting as ceiling. Frame and sheet both gable ends of pavilion. Underside of roof deck, installation of triple beams on each side of pavilion will be installed to support the added weight of trusses. Extend chimney 36" above new roof line. Re-install gutters and downspouts at end of project. Extend roof vents through new roof.

1.4 J C Parks & Recreation has some building materials on hand that shall be used for this project. Attached is a materials list and Truss Manufacturer's specifications. All other materials needed will be the responsibility of the contractor.

2. GUARANTEE

Contractor will guarantee all work & materials for this project for a period of no less than one year (1) from the date of completion.

3. REFERENCES

Project references may be required. Past performance may be considered in the awarding of this project.

4. PROJECT TIMEFRAME

Contractor must list start and completion dates. Completion date for this project is requested by April 1st (Preferred)

5. JOBSITE CONDITIONS

Jobsite shall be kept clean and orderly. Any debris removal shall be disposed of in a legal manner.

6. LICENSES, FEES, PERMITS

The Contractor is responsible for furnishing the proper licenses, fees, and permits required by law to do business in the City of Johnson City in completion of the

requirements stated herein. All work shall be done in accordance with the latest building codes, state and federal laws relative to Baseball stadiums.

7. STATE CONTRACTORS LICENSE

Bidder must be a licensed contractor in the State of Tennessee, as required by the Contractor's Licensing Act of 1994, State of Tennessee. The attached "Contractors Envelope Form" must be completed and attached to the outermost bid submittal envelope**. A copy State Contractor's License shall be included with bid package**.

8. SITE INSPECTION

Vendors are required to visit the JOBSITE to familiarize themselves with the jobsite conditions, work and materials necessary to complete the project prior to submitting a bid. Contact Teresa Taylor at 423/483-5856.

9. INSURANCE

The attached Insurance Checklist (which includes a section for the Insurance agent to fill-out), Certificate of Insurance, and General Contract Form must be completed and returned with the bid package. Successful vendor shall provide certificate of insurance, as specified, prior to contract release by Purchasing.

10. BID SECURITIES

10.1 Bid Bond - Each bid shall be accompanied by a bid bond in the amount of not less than five percent (5%) of the amount bid. Bond shall be issued by a surety company licensed to do business in the State of Tennessee. This bond is required as a guarantee that, if the bid is accepted, a contract will be entered into and the performance thereof duly secured by an approved performance bond. If the successful bidder fails to execute required contracts, the bid security will be forfeited. Bid bonds submitted by unsuccessful vendors will be returned upon award of the contract. In lieu of a bond, cashier's checks are acceptable, personal checks are not.

10.2 The successful bidder will be required to furnish a Performance and Payment Bond in the amount of one hundred percent (100%) of the bid price. Bond shall be issued by a surety company licensed to do business in the State of Tennessee. Performance bonds must be filed with the purchasing department within ten (10) working days after the contract has been issued. In lieu of a bond, cashier's checks are acceptable, personal checks are not. An irrevocable letter of credit from a state or national bank or state or federal savings and loan association having its principal office in Tennessee may be accepted instead of a performance bond, subject to approval of the terms and conditions of said irrevocable letter of credit. In the event that the successful bidder fails to furnish a performance bond and execute a contract within the time period allowed, the bid deposit of the bidder shall be retained by the city as liquidated damages and not as a penalty.

11 CONTRACTOR PERFORMANCE

These specifications are not intended to be complete in every detail. Therefore, the Contractor is expected to perform all work in a professional workmanlike manner in accordance with all applicable City, State and Federal codes and regulations.

12 MEASURE AND PAYMENT

All payments shall be NET 45 days following receipt.

13 DRUG FREE WORKPLACE

All bidders must execute the enclosed Drug Free Workplace Affidavit to verify compliance with TCA 50-9-113 and return same with bid response. Failure to comply with this requirement will declare that bid non-responsive.

SECTION I – PURPOSE OF THE DRUG & ALCOHOL TESTING PROGRAM

The City of Johnson City recognizes its responsibility to provide safe and efficient operations for our employees, our citizens and the general public. Our commitment to provide safe and efficient operations is shown by the implementation of programs and procedures which ensure compliance with appropriate safety measures, as well as the letter and intent of all applicable laws and regulations. There is sufficient evidence to conclude that the use of illegal drug/alcohol; drug/alcohol dependence and drug/alcohol abuse seriously impairs an employee's performance and general physical and mental health. The illegal possession and use of drugs, alcohol and/or narcotics by employees of the City is a crime in this jurisdiction and is clearly unacceptable. Therefore, the City of Johnson City has adopted this written policy to ensure an employee's fitness for duty as a condition of employment; to ensure the drug tests and alcohol tests are conducted on safety-sensitive positions in the categories of: pre-employment, random testing, suspicion testing, and return-to-duty testing.

To comply with TCA Title 50 Chapter 9 Part 1, all bidders and/or those proposing to do service with the City must have a testing program of the same or better than the requirements of the City of Johnson City.

14. REQUIREMENTS FOR BIDS, REQUEST FOR PROPOSALS AND CONTRACTS AND THE GENERAL TERMS & CONDITIONS.

This bid and any response to it includes the City's "Requirements For Bids, Requests For Proposals, and Contracts, etc." and "General Terms and Conditions" attached hereto and set forth herein as if verbatim.

15. WITHDRAWAL OF BID DUE TO ERROR

If within 24 hours after Bids are opened any Bidder files a duly signed written notice with Owner and promptly thereafter demonstrates to the reasonable satisfaction of Owner that there was a material and substantial mistake in the preparation of its Bid, that Bidder may withdraw its Bid, and the Bid Security will be returned, Thereafter, if the work is rebid or negotiated, that Bidder will be disqualified from further bidding on the Work. This provision to withdraw a Bid without forfeiting the Bid security does not apply to Bidder's error in judgment in preparing the bid.

16. ON HAND MATERIALS LIST (PROVIDED BY CITY)

195 pieces of 3/4" plywood
Trusses: 106 ea Mono Truss, 8 ea Common Truss (Stamped shop drawings attached)
38 rolls of roofing felt
9 boxes of coil roofing nails
300 plywood clips
60 lb 16D nails
40 lb 8D nails
100 hurricane straps
34 sq shingles
Any other materials required are the responsibility of the Contractor.

MiTek USA, Inc.
14515 North Outer Forty Drive
Suite 300
Chesterfield, MO 63017-5746
314-434-1200

Re: 58370
ROTARY PARK

The truss drawing(s) referenced below have been prepared by MiTek USA, Inc. under my direct supervision based on the parameters provided by Automated Bldg Systems.

Pages or sheets covered by this seal: I19980357 thru I19980358

My license renewal date for the state of Tennessee is June 30, 2013.

Lumber design values are in accordance with ANSI/TPI 1 section 6.3
These truss designs rely on lumber values established by others.

PHILIP J. O'REGAN
REGISTERED ENGINEER
AGRICULTURE
COMMERCE
No. 109695
STATE OF TENNESSEE

January 9,2013

ORegan, Philip

The seal on these drawings indicate acceptance of professional engineering responsibility solely for the truss components shown. The suitability and use of this component for any particular building is the responsibility of the building designer, per ANSI/TPI 1.

Job	Truss	Truss Type	Qty	Ply	ROTARY PARK
58370	A1	MONO TRUSS	106	1	I19980357
					Job Reference (optional)

Automated Building Systems, Johnson City, TN 37601

7.350 s Sep 26 2012 MiTek Industries, Inc. Wed Jan 09 10:22:53 2013 Page 1
ID:m8F2YqS0wue8zfa1pjTIM4zDv9i-ILt4oojpodSNMjEGyyemWAilp_gR9cUWj1aM1nzx6qW

-1-4-0	4-4-13	8-6-0	15-4-4	22-6-0
1-4-0	4-4-13	4-1-3	6-10-4	7-1-12

Scale = 1:42.5

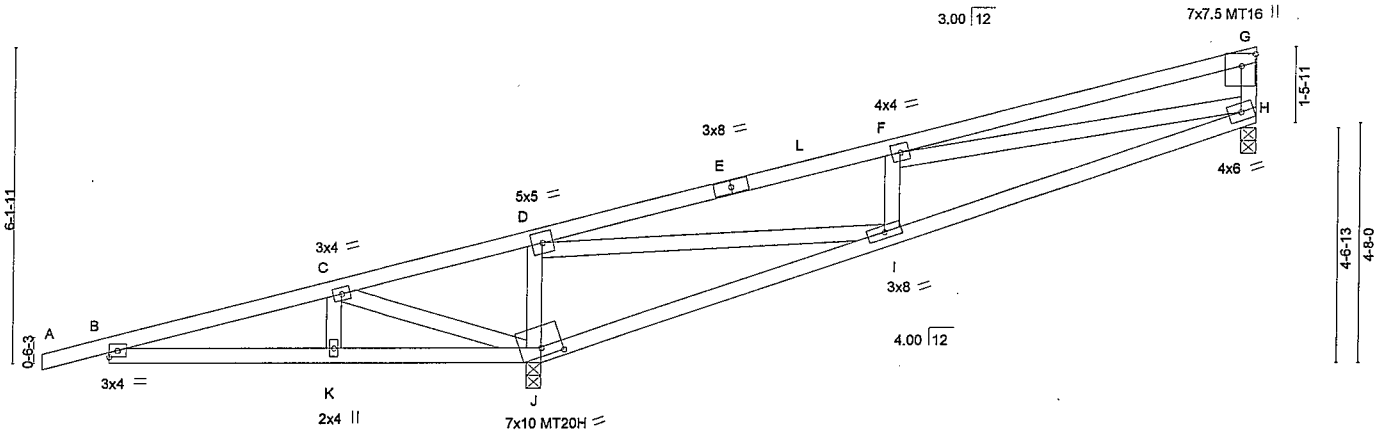

4-4-13	8-2-8	8-6-0	15-4-4	22-6-0
4-4-13	3-9-11	0-3-8	6-10-4	7-1-12

Plate Offsets (X,Y): [G:0-2-13,0-3-3], [J:0-5-0,0-2-0]

LOADING (psf)		SPACING	2-0-0	CSI		DEFL	in	(loc)	l/defl	L/d	PLATES	GRIP
TCLL	20.8	Plates Increase	1.15	TC	0.84	Vert(LL)	-0.05	I	>999	360	MT20	244/190
(Ground Snow=30.0)		Lumber Increase	1.15	BC	0.24	Vert(TL)	-0.11	H-I	>999	240	MT20H	187/143
TCDL	10.0	Rep Stress Incr	NO	WB	0.74	Horz(TL)	-0.02	H	n/a	n/a	MT16	171/147
BCLL	0.0	Code IRC2009/TPI2007		(Matrix)		Wind(LL)	0.03	I	>999	240	Weight: 106 lb	FT = 20%
BCDL	10.0											

LUMBER
TOP CHORD 2x4 SYP No.1
BOT CHORD 2x4 SYP No.1
WEBS 2x4 SP No.2

BRACING
TOP CHORD Structural wood sheathing directly applied or 5-8-12 oc purlins, except end verticals.
BOT CHORD Rigid ceiling directly applied or 5-0-15 oc bracing.

REACTIONS (lb/size) H=298/0-3-8 (min. 0-1-8), J=1608/0-3-8 (min. 0-2-0)
Max Horz J=295(LC 7)
Max Uplift H=-89(LC 6), J=-978(LC 5)
Max Grav H=468(LC 2), J=1684(LC 2)

FORCES (lb) - Max. Comp./Max. Ten. - All forces 250 (lb) or less except when shown.
TOP CHORD B-C=-727/897, C-D=-1216/1521, D-E=-599/143, E-L=-542/145, F-L=-499/160, F-G=-460/80
BOT CHORD B-K=-821/734, J-K=-821/734, I-J=-1599/1085, H-I=-198/587
WEBS C-J=-650/570, D-J=-857/476, D-I=-847/2027, F-I=-559/383, F-H=-307/254

NOTES
1) Wind: ASCE 7-05; 120mph (3-second gust); TCDL=6.0psf; BCDL=6.0psf; h=25ft; Cat. II; Exp B; enclosed; MWFRS (low-rise) gable end zone; cantilever left and right exposed ; end vertical left and right exposed; Lumber DOL=1.33 plate grip DOL=1.33
2) TCLL: ASCE 7-05; Pg=30.0 psf (ground snow); Ps=20.8 psf (roof snow); Category II; Exp B; Fully Exp.; Ct=1.1
3) Roof design snow load has been reduced to account for slope.
4) Unbalanced snow loads have been considered for this design.
5) This truss has been designed for greater of min roof live load of 20.0 psf or 2.00 times flat roof load of 20.8 psf on overhangs non-concurrent with other live loads.
6) All plates are MT20 plates unless otherwise indicated.
7) This truss has been designed for a 10.0 psf bottom chord live load nonconcurrent with any other live loads.
8) Provide mechanical connection (by others) of truss to bearing plate capable of withstanding 100 lb uplift at joint(s) H except (jt=lb) J=978.
9) Beveled plate or shim required to provide full bearing surface with truss chord at joint(s) H.

LOAD CASE(S) Standard

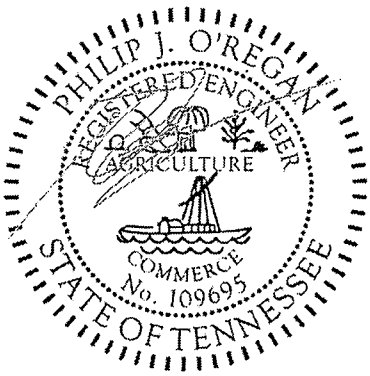

January 9,2013

⚠ *WARNING - Verify design parameters and READ NOTES ON THIS AND INCLUDED MITEK REFERENCE PAGE MII-7473 BEFORE USE.*
Design valid for use only with MiTek connectors. This design is based only upon parameters shown, and is for an individual building component. Applicability of design parameters and proper incorporation of component is responsibility of building designer - not truss designer. Bracing shown is for lateral support of individual web members only. Additional temporary bracing to insure stability during construction is the responsibility of the erector. Additional permanent bracing of the overall structure is the responsibility of the building designer. For general guidance regarding fabrication, quality control, storage, delivery, erection and bracing, consult **ANSI/TPI1 Quality Criteria, DSB-89 and BCSI Building Component Safety Information** available from Truss Plate Institute, 781 N. Lee Street, Suite 312, Alexandria, VA 22314.
If Southern Pine (SP or SPp) lumber is specified, the design values are those effective 06/01/2012 by ALSC or proposed by SPIB.

MiTek
14515 N. Outer Forty, Suite #300
Chesterfield, MO 63017

Job	Truss	Truss Type	Qty	Ply	ROTARY PARK
58370	B1	COMMON	8	1	I19980358 Job Reference (optional)

Automated Building Systems, Johnson City, TN 37601

7.350 s Sep 26 2012 MiTek Industries, Inc. Wed Jan 09 10:22:54 2013 Page 1
ID:m8F2YqS0wue8zfa1pjTIM4zDv9i-nXRT?8kSZwaEztpSWf9?3OFWUOtLu8IfyhKvZDzx6qV

1-4-0	7-4-13	16-8-15	22-0-0	27-3-1	36-7-3	44-0-0	45-4-0
1-4-0	7-4-13	9-4-1	5-3-1	5-3-1	9-4-1	7-4-13	1-4-0

Scale = 1:75.8

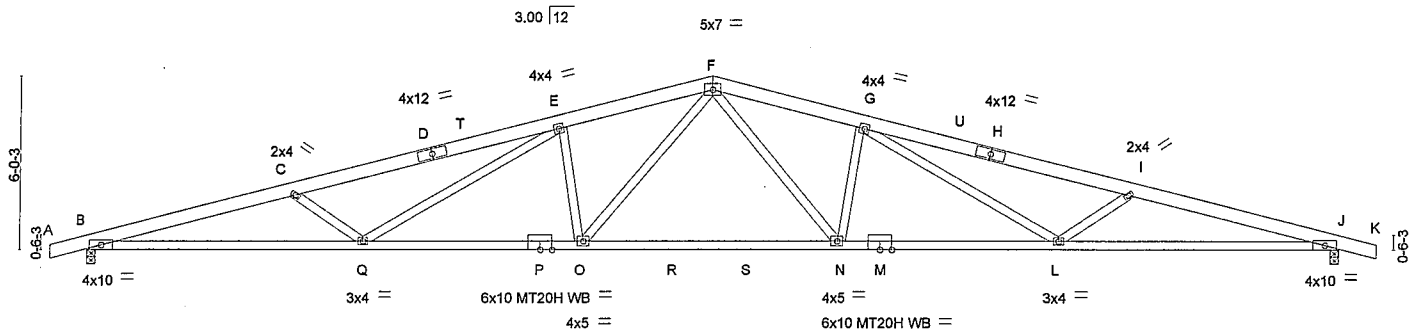

9-9-6	17-4-7	26-7-9	34-2-10	44-0-0
9-9-6	7-7-1	9-3-2	7-7-1	9-9-6

LOADING (psf)		SPACING	2-0-0	CSI		DEFL	in	(loc)	l/defl	L/d	PLATES	GRIP
TCLL	20.8	Plates Increase	1.15	TC	0.65	Vert(LL)	-0.63	N-O	>838	360	MT20	244/190
(Ground Snow=30.0)		Lumber Increase	1.15	BC	0.78	Vert(TL)	-1.43	N-O	>368	240	MT20H	187/143
TCDL	10.0	Rep Stress Incr	NO	WB	0.44	Horz(TL)	0.33	J	n/a	n/a		
BCLL	0.0 *	Code	IRC2009/TPI2007	(Matrix)		Wind(LL)	0.51	O	>999	240	Weight: 243 lb	FT = 20%
BCDL	10.0											

LUMBER
TOP CHORD 2x6 SYP No.1
BOT CHORD 2x4 SYP SS
WEBS 2x4 SP No.2

BRACING
TOP CHORD Structural wood sheathing directly applied or 2-10-9 oc purlins.
BOT CHORD Rigid ceiling directly applied or 4-11-5 oc bracing.

REACTIONS (lb/size) B=1926/0-3-8 (min. 0-2-4), J=1926/0-3-8 (min. 0-2-4)
Max Horz B=120(LC 5)
Max Uplift B=-675(LC 7), J=-675(LC 8)

FORCES (lb) - Max. Comp./Max. Ten. - All forces 250 (lb) or less except when shown.
TOP CHORD B-C=-5908/1877, C-D=-5493/1620, D-T=-5417/1621, E-T=-5398/1634, E-F=-4623/1424, F-G=-4623/1424, G-U=-5398/1635, H-U=-5417/1622, H-I=-5493/1621, I-J=-5908/1878
BOT CHORD B-Q=-1836/5663, P-Q=-1252/4554, O-P=-1252/4554, O-R=-870/3612, R-S=-870/3612, N-S=-870/3612, M-N=-1149/4554, L-M=-1149/4554, J-L=-1734/5663
WEBS C-Q=-510/431, E-Q=-284/851, E-O=-945/480, F-O=-485/1515, F-N=-485/1515, G-N=-945/480, G-L=-285/851, I-L=-510/431

NOTES
1) Wind: ASCE 7-05; 120mph (3-second gust); TCDL=6.0psf; BCDL=6.0psf; h=25ft; Cat. II; Exp B; enclosed; MWFRS (low-rise) gable end zone; cantilever left and right exposed ; end vertical left and right exposed; Lumber DOL=1.33 plate grip DOL=1.33
2) TCLL: ASCE 7-05; Pg=30.0 psf (ground snow); Ps=20.8 psf (roof snow); Category II; Exp B; Fully Exp.; Ct=1.1
3) Roof design snow load has been reduced to account for slope.
4) Unbalanced snow loads have been considered for this design.
5) This truss has been designed for greater of min roof live load of 20.0 psf or 2.00 times flat roof load of 20.8 psf on overhangs non-concurrent with other live loads.
6) All plates are MT20 plates unless otherwise indicated.
7) This truss has been designed for a 10.0 psf bottom chord live load nonconcurrent with any other live loads.
8) * This truss has been designed for a live load of 20.0psf on the bottom chord in all areas where a rectangle 3-6-0 tall by 2-0-0 wide will fit between the bottom chord and any other members, with BCDL = 10.0psf.
9) Provide mechanical connection (by others) of truss to bearing plate capable of withstanding 100 lb uplift at joint(s) except (jt=lb) B=675, J=675.

LOAD CASE(S) Standard

PHILIP J. O'REGAN
REGISTERED ENGINEER
AGRICULTURE
COMMERCE
No. 109695
STATE OF TENNESSEE

January 9,2013

WARNING - Verify design parameters and READ NOTES ON THIS AND INCLUDED MITEK REFERENCE PAGE MII-7473 BEFORE USE.
Design valid for use only with MiTek connectors. This design is based only upon parameters shown, and is for an individual building component. Applicability of design parameters and proper incorporation of component is responsibility of building designer - not truss designer. Bracing shown is for lateral support of individual web members only. Additional temporary bracing to insure stability during construction is the responsibility of the erector. Additional permanent bracing of the overall structure is the responsibility of the building designer. For general guidance regarding fabrication, quality control, storage, delivery, erection and bracing, consult ANSI/TPI1 Quality Criteria, DSB-89 and BCSI Building Component Safety Information available from Truss Plate Institute, 781 N. Lee Street, Suite 312, Alexandria, VA 22314.
If Southern Pine (SP or SPp) lumber is specified, the design values are those effective 06/01/2012 by ALSC or proposed by SPIB.

MiTek
14515 N. Outer Forty, Suite #300
Chesterfield, MO 63017

Symbols

PLATE LOCATION AND ORIENTATION

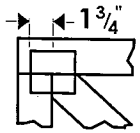

Center plate on joint unless x, y offsets are indicated. Dimensions are in ft-in-sixteenths. Apply plates to both sides of truss and fully embed teeth.

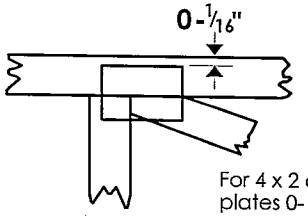

For 4 x 2 orientation, locate plates 0-1/16" from outside edge of truss.

This symbol indicates the required direction of slots in connector plates.

*** Plate location details available in MiTek 20/20 software or upon request.**

PLATE SIZE

4 x 4

The first dimension is the plate width measured perpendicular to slots. Second dimension is the length parallel to slots.

LATERAL BRACING LOCATION

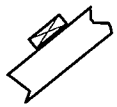

Indicated by symbol shown and/or by text in the bracing section of the output. Use T or I bracing if indicated.

BEARING

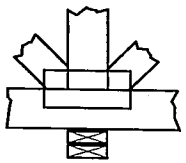

Indicates location where bearings (supports) occur. Icons vary but reaction section indicates joint number where bearings occur. Min size shown is for crushing only.

Industry Standards:

ANSI/TPI1: National Design Specification for Metal Plate Connected Wood Truss Construction.
DSB-89: Design Standard for Bracing.
BCSI: Building Component Safety Information, Guide to Good Practice for Handling, Installing & Bracing of Metal Plate Connected Wood Trusses.

Numbering System

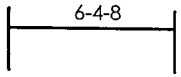

dimensions shown in ft-in-sixteenths (Drawings not to scale)

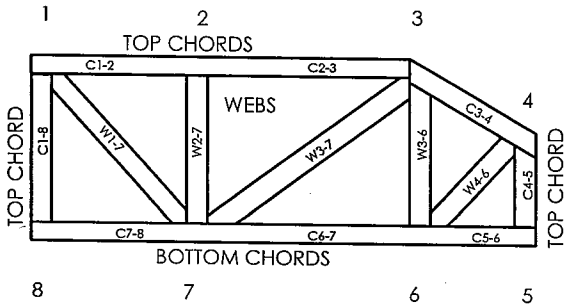

JOINTS ARE GENERALLY NUMBERED/LETTERED CLOCKWISE AROUND THE TRUSS STARTING AT THE JOINT FARTHEST TO THE LEFT.

CHORDS AND WEBS ARE IDENTIFIED BY END JOINT NUMBERS/LETTERS.

PRODUCT CODE APPROVALS

ICC-ES Reports:

ESR-1311, ESR-1352, ESR1988
ER-3907, ESR-2362, ESR-1397, ESR-3282

Southern Pine lumber designations are as follows:

SYP represents current/old values as published by AWC in the 2005/2012 NDS
SPp represents SPIB proposed values as provided in SPIB submittal to ALSC dated Sept 15, 2011
SP represents ALSC approved/new values with effective date of June 1, 2012 (2x4 No 2 and lower grades and smaller sizes), and all MSR/MEL grades

© 2012 MiTek® All Rights Reserved

MiTek Engineering Reference Sheet: MII-7473 rev. 09/04/2012

General Safety Notes

Failure to Follow Could Cause Property Damage or Personal Injury

1. Additional stability bracing for truss system, e.g. diagonal or X-bracing, is always required. See BCSI.
2. Truss bracing must be designed by an engineer. For wide truss spacing, individual lateral braces themselves may require bracing, or alternative Tor I bracing should be considered.
3. Never exceed the design loading shown and never stack materials on inadequately braced trusses.
4. Provide copies of this truss design to the building designer, erection supervisor, property owner and all other interested parties.
5. Cut members to bear tightly against each other.
6. Place plates on each face of truss at each joint and embed fully. Knots and wane at joint locations are regulated by ANSI/TPI 1.
7. Design assumes trusses will be suitably protected from the environment in accord with ANSI/TPI 1.
8. Unless otherwise noted, moisture content of lumber shall not exceed 19% at time of fabrication.
9. Unless expressly noted, this design is not applicable for use with fire retardant, preservative treated, or green lumber.
10. Camber is a non-structural consideration and is the responsibility of truss fabricator. General practice is to camber for dead load deflection.
11. Plate type, size, orientation and location dimensions indicated are minimum plating requirements.
12. Lumber used shall be of the species and size, and in all respects, equal to or better than that specified.
13. Top chords must be sheathed or purlins provided at spacing indicated on design.
14. Bottom chords require lateral bracing at 10 ft. spacing, or less, if no ceiling is installed, unless otherwise noted.
15. Connections not shown are the responsibility of others.
16. Do not cut or alter truss member or plate without prior approval of an engineer.
17. Install and load vertically unless indicated otherwise.
18. Use of green or treated lumber may pose unacceptable environmental, health or performance risks. Consult with project engineer before use.
19. Review all portions of this design (front, back, words and pictures) before use. Reviewing pictures alone is not sufficient.
20. Design assumes manufacture in accordance with ANSI/TPI 1 Quality Criteria.

DRUG FREE WORKPLACE

All vendors with five (5) or more employees must execute the attached Drug Free Workplace Affidavit to verify compliance with TCA 50-9-113 and return same with response. Failure to comply with this requirement will declare that submittal non-responsive.

City Of Johnson City, Tennessee - Policy No. HR-131
SECTION I – PURPOSE OF THE DRUG & ALCOHOL TESTING PROGRAM
The City of Johnson City recognizes its responsibility to provide safe and efficient operations for our employees, our citizens and the general public. Our commitment to provide safe and efficient operations is shown by the implementation of programs and procedures which ensure compliance with appropriate safety measures, as well as the letter and intent of all applicable laws and regulations. There is sufficient evidence to conclude that the use of illegal drug/alcohol; drug/alcohol dependence and drug/alcohol abuse seriously impairs an employee's performance and general physical and mental health. The illegal possession and use of drugs, alcohol and/or narcotics by employees of the City is a crime in this jurisdiction and is clearly unacceptable. Therefore, the City of Johnson City has adopted this written policy to ensure an employee's fitness for duty as a condition of employment; to ensure the drug tests and alcohol tests are conducted on safety-sensitive positions in the categories of: pre-employment, random testing, suspicion testing, and return-to-duty testing.

To comply with TCA Title 50 Chapter 9 Part 1, all bidders and/or proposers of service to the City must have a testing program of the same or better than the requirements of the City of Johnson City.

DRUG-FREE WORKPLACE AFFIDAVIT

State of _____

County of _____

I, _____, being duly sworn, depose, and say that:

1) I am a principal officer of _____, the firm that has submitted the attached or enclosed bid or proposal, my title being _____ of the firm; and

2) I have personal knowledge of the policies of the above-named firm with respect to the maintenance of a drug-free workplace; and

3) I certify that all provisions and requirements of the Tennessee Drug-Free Workplace Program, as established by Tennessee Code Annotated §§ 50-9-113 have been met and implemented.

(Signed) _____

(Title) _____

Subscribed and sworn to before me this _____ day of _____, _____.

_____

_____
Title

My Commission expires _____

Complete and return with response package

INSURANCE CHECKLIST

(Roof Replacement)

REQUIRED COVERAGE (marked by "x") **MINIMUM LIMITS**

__X__1. Worker's Compensation **(proprietor/partners/executive officers exclusion not allowed)** . . . . . Statutory limits of Tennessee and Employer's Liability . . . . . $100,000/accident, $100,000/disease, $500,000/disease policy limit
__X__2. Commercial General Liability **(including Premises/Operations)** . . . . . .$1,000,000 CSL BI/PD each occurrence, $1 Million annual aggregate
__X__3. Automobile Liability & Owned/Hired/Non-Owned Vehicles **. . . . . .** $500,000 BI/PD each accident, Uninsured Motorist
__X__4. Independent Contractors . . . . . $1,000,000 CSL BI/PD each occurrence, $1 Million annual aggregate
__X__5. Products/Completed Operations . . . . . $1,000,000 CSL BI/PD each occurrence, $1 Million annual aggregate
__X__6. Contractual Liability . . . . . $1,000,000 CSL BI/PD each occurrence, $1 Million annual aggregate
__X__7. Personal and Advertising Injury Liability . . . . . $1,000,000 each offense, $1 Million annual aggregate
__X__8. Umbrella Liability . . . . . $1 Million Bodily Injury, Property Damage and Personal Injury
_____9. Per Project Aggregate
10. Professional Liability
_____ a. Architects and Engineers . . . . . $1 Million per occurrence/claim
_____ b. Asbestos Removal Liability . . . . . .$2 Million per occurrence/claim
_____ c. Medical Malpractice . . . . . $1 Million per occurrence/claim
_____ d. Medical Professional Liability . . . . . $1 Million per occurrence/claim
_____11. Miscellaneous E & O . . . . . $1 Million per occurrence/claim
_____12. Motor Carrier Act End. (MCS-90) . . . . . $1 Million BI/PD each accident, Uninsured Motorist
_____13. Motor Cargo Insurance
_____14. Garage Liability . . . . . $1 Million Bodily Injury, Property Damage per occurrence
_____15. Garagekeepers Liability . . . . . .$500,000 Comprehensive, $500,000 Collision
_____16. Inland Marine-Bailee's Insurance . . . . . $_____
_____17. Moving and Rigging Floater . . . . . Endorsement to CGL
_____18. Dishonesty Bond . . . . . $_____
_____19. Builder's Risk/Installation Floater . . . . . Provide coverage in the full amount of contract
_____20. XCU Coverage . . . . . Endorsement to CGL
__X__21. Carrier Rating shall be Best's Rating of B++V or better or its equivalent
__X__22. Notice of cancellation, non-renewal or material change in coverage shall be provided to City at least **30 days** prior to action. Worker's Compensation and/or non-payment of premium - notification may be **10 days** prior to action.
__X__23. The City of Johnson City shall be named as Additional Insured on all policies except Worker's Compensation, Auto and Professional Liability. ***Per Acord 25 (2009/01), policies must be endorsed; please submit copy of endorsement.*** (Cert. Holder: City of Johnson City, Attn: Purchasing, P.O. Box 2150, Johnson City, TN 37605.)
__X__24. Certificate of Insurance shall show project number or other contract identifier used by the City.
_____25. OTHER INSURANCE REQUIRED:_____

INSURANCE AGENT'S STATEMENT:

I have reviewed the above requirements with the bidder named below. The bidder has coverage with this agency for all of the areas marked with the exception of the following numbers:

_____ _____ _____ _____ _____ _____ Comments:_____

Is Professional Liability excluded under General Liability? Yes_____ No_____
Is Contractual Liability excluded under Comm. General Liability? Yes_____ No_____
Is Independent Contractors excluded under Comm. General Liability? Yes_____ No_____

Carrier ratings: Insurer A_____; Insurer B_____; Insurer C_____; Insurer D_____

AGENCY NAME: _____ AUTHORIZED SIGNATURE: _____

Date: _____

CONTRACTOR'S STATEMENT:

I have reviewed the above requirements with my insurance agent(s) and, if awarded a contract, will provide all coverage marked.

CONTRACTOR'S NAME: _____ AUTHORIZED SIGNATURE: _____

Date: _____

Bid Number: **# 5675**

Bid or Project Name**: Reroof Harris Pavilion at Rotary Park**

This form and the General Contract Form must be signed and returned with the bid package. The Certificate of Insurance, as required, must be provided to Purchasing prior to contract award.

GENERAL CONTRACT FORM

The General Contract Form is included in every solicitation requiring insurance. The general requirements of the contract form are supplemented by items checked on the Insurance Checklist that identify specific requirements for the bid or project.

INSURANCE

Review this section carefully with your insurance agent or broker prior to submitting a bid or proposal. See Insurance Checklist (part of the Bid Forms) for specific coverage applicable to this contract. The term "Contract" as used in this section shall mean the Agreement covering the work that is entered into between the City of Johnson City, Tennessee and the Contractor.

1. General Insurance Requirements:

1.1 The Contractor shall not start work under this contract until the Contractor has obtained at its own expense all of the insurance called for hereunder and such insurance has been approved by the City; nor shall the Contractor allow any subcontractor to start work on any subcontract until all insurance required of the subcontractor has been so obtained and approved by the Contractor. Approval of insurance required of the Contractor will be granted only after submission to the Director of Purchasing of original, signed Certificate(s) of Insurance, General Contract Form, and Insurance Checklist or, alternately, at the City's request, certified copies of the required insurance policies.

1.2 No acceptance and/or approval of any insurance by the City shall be construed as relieving or excusing the Contractor, or the surety, or its bond, from any liability or obligation imposed upon either or both of them by the provisions of the Contract Documents.

1.3 The City of Johnson City (including its elected and appointed officials, agents, and employees) is to be named as an additional insured under all coverage except Worker's Compensation and Automobile Liability, and the Certificate of Insurance or the certified policy, if requested, must so state. Coverage afforded under this paragraph shall be primary as respects the City, its elected and appointed officials, agents and employees. The following definition of the term "City" applies to all policies issued under the contract:

> "The City of Johnson City, Tennessee together with all of its various departments, bureaus, and agencies, as well as any affiliated or subsidiary board, committee, or authority, including but not limited to the Johnson City Public School System."

1.4 The contractor shall provide insurance as specified in the Insurance Checklist contained in this document.

1.5 The Contractor covenants to save, defend, hold harmless and indemnify the City of Johnson City, Tennessee together with its various departments, elected or appointed officials, employees, officers, counsel, agents, and any and all other persons or entities acting on behalf of the same (collectively the City) from and against any and all claims of any sort based upon any theory of liability whatsoever, for any and all harm, loss, damage, injury, cost (including court cost and attorney fees) charges, or other liability of any nature whatsoever, however caused, resulting from or arising out of or in any way connected with the contractors performance or non-performance of the terms of the contract documents or its obligations under the contract based upon any theory of liability whatsoever, including claims brought by third persons, and further covenants to discharge all of the aforesaid persons and entities and forever hold them harmless from the same. The foregoing obligation to indemnify and defend shall continue in full force and effect after the aforesaid contractor completes all of the work required under the contract, until such time as the applicable statues of limitation or repose have expired.

1.6 The Contractor shall be responsible for the work performed under the Contract Documents and every part thereof, and for all materials, tools, equipment, appliances, and property of any description used in connection with the work. The Contractor assumes all risks for direct and indirect damage or injury to the property or persons used or employed on or in connection with the work contracted for, and of all damage or injury to any person or property wherever located, resulting from any action, omission, commission or operation under the Contract, or in connection in any way whatsoever with the contracted work, until final acceptance of the work by the City.

1.7 Insurance coverage required in these specifications shall be in force throughout the Contract Term. If the Contractor fails to provide acceptable evidence of current insurance within ten days of written notice at any time during the Contract Term, the City shall have absolute right to terminate the Contract without any further obligation to the Contractor and the Contractor shall be liable to the City for the entire additional cost of procuring performance by another vendor and the cost of performing the incomplete portion of the Contract at time of termination. Contractor is required to provide the City with notice of cancellation, non-renewal, or material change in coverage at least thirty (30) days prior to cancellation, non-renewal, or material change in coverage."

1.8 Contractual and other liability insurance provided under this Contract shall not contain a supervision, inspection or engineering services exclusion that would preclude the City from supervising or inspecting the project as to the end result. The Contractor shall assume all on-the-job responsibilities as to the control of persons directly employed by it and of the subcontractors and any persons employed by the subcontractor.

1.9 Nothing contained in the specifications shall be construed as creating any contractual relationship between any subcontractor and the City. The Contractor shall be as fully responsible to the City for acts and omissions of the subcontractors and of persons employed by them as it is for acts and omissions of persons directly employed by the Contractor.

1.10 Precaution shall be exercised by the Contractor at all times for the protection of persons (including employees) and property. All existing structures, utilities, roads, services, trees and shrubbery shall be protected against damage or interruption of

service at all times by the Contractor and its subcontractors during the term of the Contract, and the Contractor shall be held responsible for any damage to property occurring by reason of its operation on the property.

1.11 If a Contractor can not meet the insurance requirements contained in a bid, proposal, or project description, alternate insurance coverage may be considered. Written requests for consideration of alternate coverage must be received by the Director of Purchasing at least ten working days prior to the date set for receipt of bids or proposals. If the City denies the request for alternate coverage, the specified coverage will be required to be submitted. If the City permits alternate coverage, an amendment to the Insurance Requirement will be prepared and distributed prior to the time and date set for receipt of bids or proposals.

1.12 All required insurance coverage must be acquired from insurers authorized to do business in the State of Tennessee, and acceptable to the City. The insurers must also have policyholders' rating of "B++" or better, and a financial size of "Class V" or better in the latest edition of Best's Insurance Reports, unless the City grants specific approval for an exception in the same manner as described in 1.11 above.

1.13 The City may consider deductible amounts as part of its review of financial stability. The Contractor shall assume all deductibles.

2. <u>Contractor's Insurance – Occurrence Basis</u>:

2.1 The Contractor shall purchase the following insurance coverage, including the terms, provisions and limits shown in the Checklist:

- **Commercial General Liability** – The Commercial General Liability policy shall include any or all of the following as indicated on the Checklist:

  i. General aggregate limit is to apply per project;

  ii. Premises/Operations;

  iii. Action of Independent Contractors;

  iv. Contractual Liability including protection for the Contractor from claims arising out of liability assumed under this contract;

  v. Personal Injury Liability including coverage for offenses related to employment;

  vi. Explosion, Collapse, or Underground (XCU) hazards.

- **Business Automobile Liability** including coverage for any owned, hired, or non-owned motor vehicles, Uninsured Motorists insurance, and Automobile Contractual Liability.

- **Worker's Compensation** – statutory benefits as required by the State of Tennessee, or other laws as required by labor union agreements, including standard Other States coverage; Employers' Liability coverage.

3. Commercial General or other Liability Insurance – Claims-made Basis:

If Commercial General or other liability insurance purchased by the Contractor has been issued on a claims-made basis, the Contractor must comply with the following additional conditions. The limits of liability and the extensions to be included as described in the Checklist remain the same. The Contractor must either:

i. Agree to provide certificates of insurance evidencing the above coverage for a period of two years after final payment for the contract. Such certificates shall evidence a retroactive date, no later than the beginning of the Contractors or subcontractors' work under this contract, or

ii. Purchase an extended (minimum two years) reporting period endorsement for the policy or policies in force during the term of this contract and evidence the purchase of this extended reporting period endorsement by means of a certificate of insurance or a copy of the endorsement itself.

4. Alternative Coverage (Self Insurance)

Notwithstanding any of the above, the Contractor may satisfy its obligations under this section by means of self insurance for all or any part of the insurance required, provided that the alternative coverage is acceptable to the City.

5. Limits of Liability Coverage

Specific limits of liability coverage on the Insurance Checklist may be adjusted according to project risk if the adjustment is deemed appropriate and the amended amount is approved by the City Manager.

6. Verification of Compliance

I have read this General Contract Form and agree to all the terms and conditions contained therein.

Contractor's Name: _____

EIN or SSN: _____

Signed by: _____

Title: _____

Date: _____

This form and the Insurance Checklist must be completed and returned with Certificate of Insurance, as specified, prior to contract award.

STATE CONTRACTORS LICENSING INFORMATION
BID ENVELOPE FORM

THIS FORM MUST BE FIRMLY ATTACHED TO THE OUTSIDE OF THE ENVELOPE CONTAINING THE BID. NO BID WILL BE CONSIDERED IF THIS FORM IS INCOMPLETE OR NOT ATTACHED TO THE OUTERMOST BID ENVELOPE IF BID IS $25,000+

PART 1

ALL BIDDERS MUST COMPLETE

TO:	City of Johnson City, Tennessee **RE-ROOF HARRIS PAVILION AT ROTARY PARK** **ITB #5675**
DUE DATE & TIME:	**JANUARY 30, 2013 1:30 PM**
LOCATION:	OFFICE OF PURCHASING DIRECTOR, 209 WATER STREET JOHNSON CITY, TN 37601
NAME OF BIDDER:	
ADDRESS OF BIDDER:	
FEDERAL ID # OF BIDDER:	
LICENSE NO.:	#
LICENSE CLASSIFICATION OF BIDDER:	
EXPIRATION DATE:	
MONETARY LIMITS:	

PART 2

BIDDER MUST COMPLETE THIS SECTION IF BID INVOLVES: $25,000+ (1) ELECTRICAL WORK, (2) PLUMBING WORK, (3) HEATING,VENTILATION, AIR CONDITIONING, (4) GEOTHERMAL WORK OR $100,000+ (5) MASONRY.

IF NOT, ENTER NONE IN THE SPACES FOR ITEM (A) BELOW.

(1) ELECTRICAL	(2)PLUMBING	(3)HVAC	(4)GEOTHERMAL	(5)MASONRY
A) Name of licensed **Electrical** contractor:	A) Name of licensed **Plumbing** contractor:	A) Name of licensed HVAC contractor:	A) Name of licensed **Geothermal** contractor:	A) Name of licensed **Masonry** contractor:
B) License #:	B) License #:	B) License #:	B) License #:	B) License #:
C) License Classification and Limits:	C) License Classification and Limits:	C) License Classification and Limits:	C) License Classification and Limits:	C) License Classification and Limits:
D) License expiration date:	D) License expiration date:	D) License expiration date:	D) License expiration date:	D) License expiration date:

CITY OF JOHNSON CITY, TENNESSEE

BID/PROPOSAL
GENERAL TERMS AND CONDITIONS
(Read Carefully)

1. PREPARATION OF BIDS/RFP'S
Only bids submitted on forms furnished by the city will be considered. Bids on company letterhead or quotation sheets will be judged non-responsive. TELEPHONE OR FACSIMILE BIDS WILL NOT BE ACCEPTED. Electronic receipt of bids/proposals is acceptable for those posted at: ***https://purchasing.johnsoncitytn.org/bso***. **Paper bids shall be sealed in an envelope.** No bid received after closing time shall be considered. The official time for paper bids will be that of the date and time clock in the Purchasing Department. For electronic bids the official time is that posted on the website. Late bids will not be accepted. The City of Johnson City shall not be responsible for technical difficulties experienced by vendors trying to register or submit their bid/rfp response electronically less than one hour prior to the bid/rfp opening time. If not offering a bid/proposal response, the vendor is encouraged to complete the "Statement of Decline" form and return prior to solicitation opening.

2. SIGNATURE ON BIDS
When submitting a bid, other than electronically, the bid form must contain the full name and address of the company and be signed in Ink by a person authorized to bind that company to a contract. Submission of an electronic solicitation constitutes acceptance of all terms and conditions. Unsigned paper bids will not be considered, read or tabulated. They may not be signed during or after the bid opening, even if a representative is present.

3. PRICING
All pricing must appear in the spaces provided on the city's form (if applicable) and be in ink or typed. Changes or corrections by the bidder/proposer must be initialed in ink by the person signing. No corrections may be made in pencil. Unit prices will prevail in case of an extension error. The City will correct math computation errors (unit price & totals). No bid may be altered or amended after bid opening time. Obvious mistakes will be given special consideration upon receipt of written request and full disclosure or evidence regarding pricing error.

4. BID/RFP OPENINGS
Bids/RFP's (paper & electronic) will be read aloud at the specified date and time as stated in the document. All openings are public meetings. All bidders/proposers and interested persons are invited to attend. The City reserves the right to postpone any bid/rfp opening under circumstances warranting such action, including but not limited to instances when the City receives fewer than two responses.

5. EXAMINATION OF BIDS/RFP'S
Bids/RFP's and associated documents may be examined at the opening. They are closed for review and inspection during the evaluation period prior to award.

6. COOPERATIVE PURCHASING:
Bidders/Proposers are to indicate whether it is permissible for other governments in Tennessee to purchase these items or services at the same price. Freight charges can be adjusted to reflect differences in delivery costs.

7. BID TABULATIONS/RFP RESPONSES
Bid tabulations and RFP respondent's lists will be posted and available the next business day on our website: http://www.johnsoncitytn.org then select Purchasing Department, Current Bid/Notices.

8. MULTIPLE ITEM BIDS
The City will determine the successful bidder(s) either on the basis of the individual line items or the total of all items. ALL OR NONE bids must be clearly identified on the bid form and will be considered only if in the City's best interest.

9. BID/RFP EVALUATION
Bids/RFP's will be evaluated according to the criteria set forth in the document with the degree of importance determined by the City.

10. ACCEPTANCE, REJECTION AND POSTPONEMENT
Issuance of a bid/rfp does not commit the City to make an award. The City reserves the right to postpone or reject any or all bids/rfp's, to waive informalities and to accept the bid/rfp judged to be in the best interest of the City.

11. AWARD
An award, if made, shall be to the lowest responsible, responsive bidder(s) or best proposal meeting quality and performance standards as described in the solicitation documents and whose bid/rfp is determined to be in the best interest of the City.

12. AWARD PERIOD
The City shall have 60 days to issue a contract. Any contract past that period must be mutually agreed upon by both parties.

13. FOB POINT
All prices quoted shall be FOB delivered to the using department, City of Johnson City, TN unless otherwise stated in the solicitation document. Risk of loss and/or damage shall be upon the Seller until such time as the goods have been physically delivered and accepted by the City.

14. DISCOUNT AND PAYMENT
Payment terms are Net 30 following receipt of the material or service and a correct invoice unless otherwise stated in the solicitation document. Discounts for prompt payment will not be considered in the bid evaluation for award. Partial payment will be allowed only if addressed in the solicitation.

15. TAXES
The City is exempt from Federal excise tax, State, and city sales tax. Contractors are not exempt from the use tax on materials and supplies used in the production of an item or in the performance of a repair or construction contract. Tax exemption certificates will be furnished upon request.

16. TERM OF CONTRACT
Unless otherwise stated, the City reserves the right to purchase like items at the same contract price for a period of one year from the award date subject to agreement of both parties. The City may cancel any contract for cause following written notification of intent.

17. ORAL INSTRUCTIONS
No oral interpretations or instructions given by any city employee or any other person shall apply. Changes relative to any solicitation will be in writing to all known interested parties and posted on the City's website. These addendums will originate either from the Purchasing Department or the issuing Architect.

18. DELIVERY
Delivery/completion schedule must be clearly identified and realistically stated, as this may be a determining factor in the award.

19. SAFETY STANDARDS
All manufactured items and fabricated assemblies shall comply with applicable requirements of OSHA and any related standards thereto.

20. BRAND NAMES

By referencing a brand name or equal, the City intends to establish a minimum level of quality by which alternate offers can be judged. If an alternate is offered, the vendor must include complete descriptive literature and specifications that clearly describe the item and how it differs from the referenced item. Vendor reference to literature previously submitted will not satisfy this provision. Unless specified otherwise, it is understood that the referenced product will be furnished. The City alone will determine whether an alternate is equivalent and meets the standards of quality and performance for the City's use. A sample or demonstration may be required at the expense of the vendor.

21. EQUAL OPPORTUNITY

It is the policy of the City of Johnson City to ensure compliance with Title VI of the Civil Rights Act of 1964; 49 CFR, Part 21; related statutes and regulations to that end that no person shall be excluded from participation in or be denied benefits of, or be subjected to discrimination under any program or activity receiving Federal financial assistance or any other funding source on the grounds of race, color, sex, national origin, or ancestry. By virtue of submitting a response to this solicitation, vendors agree to comply with the same non-discrimination policy.

22. SAMPLES

Samples will be furnished at no charge to the City. They will remain in the Purchasing Department for testing and evaluation until an award is made. Vendors are responsible for picking up their samples within two (2) weeks after the award. Samples not collected after that time shall become the property of the City. Samples from the successful vendor will be held until delivery is received and accepted as being equal to the sample.

23. CONDITION STANDARDS

It is understood and agreed that any item offered or shipped as a result of this solicitation shall be new and unused and the manufacturer's latest model unless otherwise called for in the solicitation.

24. INSPECTION

All supplies or materials purchased as a result of this solicitation are subject to inspection and rejection by the City. Rejected materials will be returned at the vendor's expense.

25. PARTS AND SERVICE

The successful vendor must be able to provide adequate parts and service for all items awarded. Service location and ability to perform may be a consideration in the award.

26. WARRANTY

Unless otherwise specified by the City, all items shall be guaranteed for a minimum period of one (1) year against defects in material and workmanship.

27. LICENSES, FEES, PERMITS

The contractor is responsible for furnishing the proper licenses, fees, and permits required by law to do business with the City of Johnson City in completion of the project. All work shall be done in accordance with the latest building codes, state and federal laws relative to public works contracts.

28. INSURANCE

The contractor shall maintain, at his expense, such insurance as will protect him from claims under Worker's Compensation Act and from claims of damages because of bodily injury, including death and damage to the property of others and claims for damages which may arise during operations under this contract whether such operations be by himself or by any subcontractor of anyone directly or indirectly employed by either of them. Any required insurances shall be maintained for the term of the contract.

29. INDEMNIFICATION

The vendor shall guarantee and certify by submitting a response to this solicitation that if successful, they shall indemnify and defend the City against any and all claims or legal actions arising as a result of their performance of the contract, whether or not such claims relate to damages or alleged damages sustained by physical injury to contractors personnel, subcontractors, city employees or other persons, or against any lawsuits arising from alleged or actual patent infringements, and shall hold the City, its various departments, employees, and any and all persons or entities acting on its behalf harmless from the same.

30. DEFAULT

In case of contractor default or failure to provide material or service according to the solicitations, the City may cancel this contract and acquire from another source and may recover any excess cost by (1) invoice; (2) deduction from an unpaid balance due; (3) collection against the bid and/or performance bond; or (4) a combination of the aforementioned remedies or other remedies provided by law. All costs associated with default will be borne by the contractor. The City reserves the right to remove a company in default from the active vendor list for a time period to be determined by the Director of Purchasing.

31. PENALTIES

Vendors may be removed from our active vendor system for any of the following:

- Failure to respond to three consecutive solicitations
- Failure to meet delivery requirements
- Failure to furnish items as a result of a solicitation
- Failure to provide service or material as a result of the award
- Offers of gratuities or favors to any City employee

32. NON-COLLUSION AGREEMENT

By submitting this solicitation, the agent representing all officers, partners, owners, representatives, employees or interested parties of the vendor's firm certifies to the best of his/her knowledge and belief this bid/proposal to the City of Johnson City, Tennessee has not been prepared in collusion with any other seller, proprietor, or manufacturer of similar products or services. The agent also certifies that the prices, terms and conditions of said bid/proposal have been arrived at independently and have not been communicated by the submitter, nor by any of the aforementioned firm associate to any other seller, proprietor, or manufacturer of similar products or services and will not be communicated prior to the official opening of said solicitation. The agent further states that no official or employee of the City of Johnson City has promised any personal, financial or other beneficial interest, either directly or indirectly, in order to influence award of this solicitation.

REQUIREMENTS FOR BIDS, REQUESTS FOR PROPOSALS, AND CONTRACTS
BETWEEN THE CITY OF JOHNSON CITY
AND OTHER PARTIES

The City of Johnson City has established the following requirements for use in all bids and contracts between the City and any other person or entity. The following list is mandatory and modifies any bid, contract, or request for proposal, or conditions applicable to, signed by, or let by the City, notwithstanding anything contained in any particular conditions, contract, request for proposal, or bid to the contrary.

In general, the following provisions apply to all such contracts, bids, requests for proposals, contracts requiring bids, and bids containing contracts:

1. The City of Johnson City shall not answer to any contracting party for the furnishing of public records to a person requesting such in accordance with Tennessee law.
2. The City, while it may designate in writing a representative on a particular project, shall only be bound by a majority vote of the Board of Commissioners or by the limited authority delegated to the City Manager pursuant to City Ordinance. No personal representative of the City assigned to a particular project may bind it in excess of the dollar amounts granted to the City Manager by Ordinance, and no personal representative assigned to a particular project may bind the City for an amount equal to or less than the dollar amounts granted to the City Manager by Ordinance without the City Manager's approval.
3. The City shall not in any event waive any claims for damages including but not limited to consequential damages in any contract for any reason or purpose.
4. No decision of an architect, engineer, or personal representative of the City shall be final and binding on the City, unless the City so agrees in any dispute with any party including but not limited to an architect, a contractor, a subcontractor, an engineer, etc. If the City agrees to be bound pertaining to a dispute, then the monetary limits contained in the City's ordinances regarding the authority of the City Manager shall prevail, and any amounts exceeding the authority of the City Manager shall be referred to the Board of Commissioners for their consideration.
5. The City shall not participate in any mediation or arbitration regarding any agreement to which it is a party, and all matters left unresolved between the City and any other party, person, or entity shall be resolved in a court of competent jurisdiction in either Washington County, Tennessee, or in Federal District Court in Greeneville, Tennessee.
6. No party or other entity shall file a lien of any nature whatsoever against City property, real, personal, or mixed, no matter where that property is located. Should a party or entity contracting with the City or acting as a subcontractor or subsubcontractor file a lien against any property, real, personal, or mixed, owned by the City, then that party or entity shall take immediate steps at its own cost and expense to remove said lien, or the City shall take such steps as it deems necessary and hold the other party or entity liable for any costs and attorneys' fees associated with the lifting of said lien.
7. The City shall exercise its sole discretion before agreeing to any assignments of any contracts or subcontracts regarding any project in which the City is involved. No contract with the City shall be assignable without the City's sole, discretionary, absolute consent.
8. The City shall not be required to supply any information regarding its title to any property in which it has an interest for any purposes regarding the filing of liens.
9. The City shall not waive any claims it has in the making of final payment in any project in which it is involved. The City shall have the right to terminate any agreement to which this document is attached at any time in its sole discretion without cause. In the event the City terminates without cause any agreement to which this document is attached, then in such event the City shall be liable only for the actual work and costs that have accrued at or before the date of the City's termination. In no event shall the City be liable for lost profits, consequential damages or incidental damages in the event it terminates a contract without cause.
10. Except to the extent allowed by law, the City shall not indemnify and hold harmless any other party, entity, person, their agents, employees, or anyone else in the world for any reason whatsoever.
11. The City shall not waive the rights of subrogation of its insurers or itself for any purpose whatsoever, and the City shall not cause any such endorsements to be placed on any policies to which it is a party.
12. Unless the City elects otherwise, the City shall not provide any "builders' risk" or an "all-risk" or equivalent policy for any reason whatsoever for any project in which the City has an interest, and the contractor or other such party shall assume this responsibility. That builder's risk policy provided by the contractor or other such interested party shall name the City as an additional insured. The City shall not provide boiler and machinery insurance, but shall require such insurance as applicable, depending on the parameters of whatever project is involved. The cost of boiler and machinery insurance shall be borne by the appropriate contractor, subcontractor, or other interested party. The City shall not insure the interests of any other person or entity, nor shall the City add any other person or entity as an additional insured to any of its policies.

13. The City shall not waive any rights regarding the loss of use of the City's property.
14. As to acts or failures to act or any causes of action by any party to a contract, whether that party be the architect, owner, contractor, City, etc., a cause of action shall accrue according to Tennessee law. No contract provision shall shorten the statutes of limitations, statutes of repose, or the accrual of any causes of action which the City might have against another party or entity. No contract provision shall waive any warranties, express or implied, nor shall any contract limit the standard of care for any particular service or undertaking to that of the locality where those services or undertakings are performed.
15. Any interest to be paid by the City of Johnson City for late payments shall be at the rate of interest at which the City pays on its most recently issued bonds.
16. The City reserves to itself the right to approve the use of any tests, including but not limited to any borings, test pits, geotechnical work, environmental tests, and the like in its own sole discretion. All design professionals, consultants, subcontractors, or the like shall be duly licensed in the State of Tennessee, if licensure in the State of Tennessee is required for the work to be performed by such design professional, consultants, or subcontractors.
17. Notwithstanding any applicable choice of law or conflict of law provisions or decisions, the law of the State of Tennessee shall govern all contracts to which this document is attached.
18. The City of Johnson City shall not provide any legal advice, legal services, surveys, or procure the same for any other party.
19. Upon payment for services as rendered, all design documents and all instruments of service created by design professionals, including but not limited to architects, landscape architects, engineers, etc., shall become the property of the City of Johnson City, Tennessee. The City of Johnson City shall be allowed to use all design documents and instruments of service, including but not limited to bid drawings, shop drawings, reports, specifications, cost estimates, schematic designs, construction designs, and the like for future additions or alterations to the current project or for use in other projects. Any use of the aforementioned designs and construction documents shall be at the City's sole risk and without liability to the design professional. The design professional's name and seal will be removed from all such design documents prior to the City's use thereof.
20. No person or entity shall respond to a request for bid or request for proposal with any terms or conditions that might change, alter, amend, or differ with the specifications, terms, or conditions originally provided by the City in its initial request for bids or proposals.

October 5, 2009

STATEMENT OF BID/RFP DECLINE
City of Johnson City, Tennessee

NOTE: **If you do not intend to respond to this solicitation, complete and return this form on or before the stated deadline to Purchasing Department, P. O. Box 2150, Johnson City, TN 37605 or via facsimile 423/975-2712.**

We value your feedback and ask that you complete the following:

Bid/RFP No. **# _____**
Bid/RFP Name **_____**

We, the undersigned, decline to submit on the above bid/proposal for the following reason(s):

_____ **Insufficient time to adequately prepare a response**

_____ **Our company does not offer this product or service. Remove us from the vendor list**

_____ **Our schedule will not permit us to perform in a timely manner**

_____ **We are unable to meet bond requirements**

_____ **We are unable to meet insurance requirements**

_____ **We are unable to offer comparable product or service**

_____ **We are unable to meet specifications (explain below)**

_____
_____
_____
_____

We understand that if this statement is not completed and returned, our company may be deleted from the City's solicitation list for this commodity or service.

Company Name: _____
Address: _____
_____
Signature: _____
Telephone: _____
E-mail: _____
Date: _____