PROPOSAL CONTRACT

FOR THE CONSTRUCTION OF

Contract No. CJC100

PIN:	041039.00
County:	WASHINGTON
Federal Project No.:	IVHS-9447-(402)
State Project No.:	90952-1642-54
Local Agency ITB No.:	5636
Description Of Project:	JOHNSON CITY INTELLIGENT TRANSPORTATION SYSTEM (ITS) AND TRANSPORTATION MANAGEMENT CENTER (TMC)
Project Length:	16.2 MILES
Completion Time:	On or Before JANUARY 10, 2014

FOR REVIEW ONLY
NOT TO BE USED FOR BIDDING

By: _____

City, St.: _____

Surety: _____

TABLE OF CONTENTS

Instruction to Bidders .....

Supplemental Specifications to The Standard Specifications ..... Revision Date
Supplemental Specification to Section 100..... 08-06-12
Supplemental Specification to Section 200..... 08-06-12
Supplemental Specification to Section 300..... 01-05-10
Supplemental Specification to Section 400..... 02-13-12
Supplemental Specification to Section 500..... 12-13-10
Supplemental Specification to Section 600..... 06-25-12
Supplemental Specification to Section 700..... 12-13-10
Supplemental Specification to Section 800..... 05-05-10
Supplemental Specification to Section 900..... 02-13-12

The above Supplemental Specifications, revised as noted, are incorporated by reference for bidding purposes and will be printed with the Contract after awards. These Supplemental Specifications may be obtained from the Department at Suite 700, James K. Polk Bldg., Nashville, Tennessee or viewed on the Department's website at http://www.tdot.state.tn.us/construction.

Special Provisions.....Special Provision Number, Regarding: .....Date
Unbalanced Bid……..102B……03/01/06
Employing and Contracting with Illegal Immigrants……..102I……02/05/07
Buy America Requirements……..106A……06/20/11
Water Quality & Storm Water Permits……107FP……02/13/12
No Water Quality Permits Are Required For This Project
Specialty Items……108A
Highway Signs, Luminaires, & Traffic Signals…..……..……..…700SIG...……...02/03/07
Equal Employment Opportunity……1230……...03/01/06
Standard Federal Equal Employment Opportunity……..……1231...……...03/01/06
Notice Of Requirement for Affirmative Action to Ensure..……1232...……...03/01/06
Disadvantaged Business Enterprise Participation.……..……1246...……...11/10/08
DBE Contract Goals……..……1247...……...09/17/11
Required Contract Provisions (Federal-Aid Construction)……1273...……...03/10/94
Certification Regarding Debarment, Suspension, and Other
Responsibility Matters Primary and Lower Tier Covered Transaction…1275...……...03/01/06
Non-Discrimination in Employment……..……..……1290...……...03/01/06
Tennessee Department of Transportation Minimum Wage Scales For
Federal-Aid Construction and State Funded Construction……..……1320...……...01/11/12
§18.42 Retention and Access requirements for records
§18.36 Procurement
§18.26 Non-Federal Audits
City General Contract Form
ITB 5511 (additional instructions)
Insurance Checklist P-W Traffic – ITS
Supplemental Bid/Proposal General Terms And Conditions

Federal Wage Rates 01-11-12
State Wage Rates 12-15-11
Proposal.....
Bid Form .....
Proposal Certification.....
Proposal Bond .....
Proposal Guarantee.....
Contract .....
Contract Payment and Performance Bond .....

Other Technical Special Provisions.....
Technical Specifications:
Cover and Table of Contents
TSP 01 General Requirements
TSP 02 Conduit
TSP 03 Pull Boxes
TSP 04 Fiber Optic Infrastructure
TSP 05 Modem
TSP 06 Equipment Cabinets
TSP 07 Poles And Structures
TSP 08 CCTV Camera System
TSP 09 Netswitch
TSP 10 Electrical
TSP 11 Terminal Servers
TSP 12 Weather Equipment
TSP 13 TMC Hardware
TSP 14 Central Software General Specifications
TSP 15 TMC Videowall
TSP 16 LED Monitors
TSP 17 TMC
TSP 18 Project Acceptance

ATTENTION

It shall be the bidders' responsibility to confirm that the Contract Proposal contains all the documents indicated on the Table of Contents.

Should any omissions occur, the appropriate documents may be obtained from the Construction Division upon request.

CITY OF JOHNSON CITY

INSTRUCTIONS TO BIDDERS

BIDS TO BE RECEIVED

Sealed bids for the construction of the following projects will be received by the CITY of JOHNSON CITY, 601 E. MAIN STREET, JOHNSON CITY, TN until 11:00 AM and opened publicly at 209 Water Street, Johnson City , TN 37601, 11:00 AM . The reading of the bids will begin at 11:00 AM.

The proposed construction shall be performed in accordance with the most current version of the Standard Specifications for Road and Bridge Construction of the Tennessee Department of Transportation , and the Standard Roadway and Structures Drawings of the Tennessee Department of Transportation which are incorporated herein by reference and made a part hereof. In addition, only the Special Provisions contained within the applicable Contract Proposal will be considered binding. Any reference to any Special Provision not contained within the applicable Contract Proposal shall be disregarded. All questions related to the Contract Proposal, Plans, Specifications or Special Provisions shall be directed to the PURCHASING OFFICE (423-975-2716). Information received from other offices of the CITY strictly advisory.

MANDATORY PRE-BID MEETING

A representative from any Prime Contractor planning to bid on the project must be present and sign in to the roster at the Pre-Bid Meeting in order to have the Contractor's bid considered. If the Prime Contractor does not have a representative at the Pre-Bid Meeting, the Contractor's bid will not be considered. The Company's Name must be on the Pre-Bid roster to be considered.

The Pre-Bid Meeting will be held at 2:00 p.m. in the Administrative Conference Room at the Municipal and Safety Building (City Hall) at 601 East Main Street, Johnson City, Tennessee on November 16, 2012.

IMPORTANT NOTICE TO BIDDERS:

Prospective bidders should read the following instructions carefully before submitting their bids. Special attention is called to the regulations of the CITY that total bids, rather than unit prices, will be read. Proposals shall be rejected as being irregular if they fail to contain a unit price for each item listed. Extensions of the various items must be sub-totaled, carried forward, and shown as a grand total following the last proposal item. All entries must be in ink.

After a bidder has deposited a proposal with the CITY, he can withdraw it only on written request in accordance with Subsection 102.07 of the Tennessee Department of Transportation Standard Specifications.

Totals read at the opening of the bids are not guaranteed to be correct and no final award of the contract will be made until bids and extensions have been checked and re-checked.

On all projects which are financed in whole or in part by funds received through Federal agencies and/or the Tennessee Department of Transportation, the awarding of contracts by the CITY will be subject to approval by the Tennessee Department of Transportation. The CITY reserves the right to reject any bid proposal which is not acceptable to the parties as listed, although such bid proposal would otherwise qualify as the lowest and best bid under the Tennessee Department of Transportation Standard Specifications.

The CITY reserves the right to reject any or all Proposals, to waive technicalities or to advertise for new Proposals, if in the judgment of the awarding authority, the best interest of the CITY will be promoted thereby.

The CITY reserves the right to cancel the award of any Contract, at any time prior to execution of said Contract by all parties without any liability against the CITY.

The awarding of the contract or rejection of all proposals will be made within 30 days after the formal opening of the proposals. Upon award, a detailed letter of instructions will be forwarded along with appropriate documents to the low bidder.

The CITY hereby notifies all bidders, that it will affirmatively insure that in any contract entered into pursuant to this advertisement, disadvantaged business enterprises will be afforded full opportunity to submit bids in response to this invitation and will not be discriminated against on the basis of age, race, color, religion, national origin, sex or disability in consideration for an award.

The CITY is an equal opportunity affirmative action employer, drug-free, with policies of nondiscrimination on the basis of race, sex, religion, color, national or ethnic origin, age, disability, or military service.

PREQUALIFICATION OF BIDDERS:

Each prospective bidder and subcontractor will be required to file a document entitled "Prequalification Questionnaire." The foregoing shall be filed on a form provided by the Tennessee Department of Transportation. The form must be filled out completely, and the truth and accuracy of the information provided must be certified by a sworn affidavit signed by an officer, partner, owner or other authorized representative of the applicant who has authority to sign contracts or other legal documents on behalf of the applicant. A prospective bidder must be prequalified by and in good standing with the Tennessee Department of Transportation prior to the issuance of a proposal form. A prospective subcontractor must be prequalified by and in good standing with the Tennessee Department of Transportation prior to being approved as a subcontractor. Each prospective bidder or subcontractor shall notify the Tennessee Department of Transportation if there is any subsequent change in the name, organization or contact information provided.

Prospective bidders' "Prequalification Questionnaire" shall be filed with the Tennessee Department of Transportation at least fourteen (14) days prior to the date of opening bids on any letting in which the applicant intends to submit a bid to the CITY, or at least fourteen (14) days prior to the date on which the applicant requests approval as a subcontractor under a contract awarded by the CITY. Bidders intending to submit proposals consistently shall complete and submit the prequalification application annually; however, this document may be changed during such period upon submission of additional favorable reports or upon receipt by

the Tennessee Department of Transportation of substantiated evidence of unsatisfactory performance. The Tennessee Department of Transportation reserves the right to request additional information and documentation to clarify and/or verify any information submitted in an applicant's prequalification application.

The prequalification form can be found at the web address
http://www.tdot.state.tn.us/construction

A proposal to be used for non-bidding purposes may be issued to any interested party regardless of prequalification.

PROPOSAL BOND

Each proposal must be accompanied by a bidder's bond, or Cashier's Check, or Certified Check made payable to the CITY in an amount equaling not less than five percent (5%) of the amount bid. In the case of optional items in the proposals, the amount of the bidder's bond or check must be in an amount equaling not less than five percent (5%) of the total amount of the bid based on the high option.

If the bidder's bond is offered as guaranty, the bond must be on the form furnished by the CITY and made by a surety company, qualified and authorized to transact business in the State of Tennessee and must be acceptable to the CITY.

If a check is offered as guaranty, the check of the successful bidder will be cashable at the discretion of the CITY, pending the satisfactory execution and acceptance of the contract and the contract bond.

ISSUANCE OF BIDDING DOCUMENTS

This CITY and the Tennessee Department of Transportation are on a cash basis for sales of Plans, Proposal Contracts, Standard Specifications, Standard Drawings, Standard Drawing Books and Tabulations of Bids. Requests for documents must be accompanied by cash, check, money order, or they may be mailed to the buyer C.O.D.

A charge of $50.00 plus 0% sales tax, for in-state delivery, will be made for each Proposal Contract. This charge is applicable regardless of whether the Proposal is to be used for bidding or non-bidding purposes. Proposals will be obtainable until the time set for opening bids. The charge for Plans and/or Cross-sections will be as specified in the Notice to Contractors and this charge will be applicable before the letting and for three months after the letting. Plans ordered after the three month period will be furnished at $1.00 per sheet. Individual Plan sheets and individual Standard Drawings will be furnished at $1.00 per sheet. Tabulations of bids will be furnished at $1.00] per sheet. Tennessee Department of Transportation Standard Drawing Books will be furnished by the Tennessee Department of Transportation at $100.00 per book plus 9.25% sales tax, for in-state delivery. Tennessee Department of Transportation Standard Specifications for Road and Bridge Construction, dated March 1, 2006, will be furnished by the Tennessee Department of Transportation at $12.00 per book plus 9.25% sales tax, for in-state delivery. There will be a minimum charge of $2.00 on any purchase. All documents will be furnished without refund and transmitted at your risk.

When two or more contractors wish to bid together in a joint venture, each contractor will be required to make a written request for such a proposal to the CITY. This request shall be signed by an authorized signatory of each firm.

Requests for joint venture proposals may be made in person or by telephone. However, the proposal for said joint venture will not be issued until the request in writing, as set forth above, is received by the CITY.

REJECTION OF PROPOSALS

Proposals will be rejected as irregular if prior to the formal opening of the Proposal all of the following documents have not been signed: (1) the bidder shall sign by written signature the Proposal form, (2) the bidder shall sign by written signature the Proposal Certification form, (3) the bidder shall sign by written signature the Proposal Bond form or the Proposal Guarantee, whichever is applicable, (4) the Agent or Attorney-in-Fact representing a Surety Company shall sign by written signature the Proposal Bond, if applicable. In addition, Proposals will be rejected if any of the above signatures are a reproduced copy, such as, but not limited to a photostatic copy or a facsimile transmission. An original, dated and valid Power of Attorney for the Attorney-in-Fact must accompany the Proposal and the Contract. The accompanying Power of Attorney must be dated, and the date must be the exact same date as the date on the Proposal Bond. The Proposal and the Proposal Bond, including the attached Power of Attorney, shall be valid and binding for 60 days subsequent to the date of opening bids.

Proposals shall be completed on the forms as issued. Please review a part of Subsection 102.02 of the Tennessee Department of Transportation Standard Specifications stating: “All of the documents that are bound therein are part of the Proposal and shall not be detached.” Proposals shall not be taken apart. Proposals taken apart may be subject to rejection. Also, please review a part of Subsection 102.09 of the Tennessee Department of Transportation Standard Specifications stating: “Proposals will be rejected as being irregular if they are not prepared on the prescribed forms; if they show any omissions, alterations of form, additions, or conditions not called for, unauthorized alternate bids, or irregularities of any kind; or if they fail to contain a unit price for each item listed.” Proposals shall be completed on the forms as issued. Photostatic or facsimile copies of Proposal sheets may not be attached to the Proposal. Proposals containing forms not issued by the CITY may be subject to rejection.

ADDENDA

Addenda to the Proposal will be acknowledged by all bidders. Failure to acknowledge receipt of Addendum Letters is grounds for rejection.

RETAINAGE

Effective for all contracts, the CITY will not hold retainage. In addition, the Contractor will not be able to hold retainage from the subcontractor.

SUBCONTRACTS

Your special attention is called to Section 105 - Control of Work, and Section 108 - Prosecution and Progress of the Tennessee Department of Transportation Standard Specifications, concerning duties of the contractor and subletting of contracts.

CHANGED CONDITIONS

Your special attention is called to Section 104.02 of the Tennessee Department of Transportation Standard Specifications, concerning changed conditions on this contract.

_____

[CITY/COUNTY Officer]

The following information applies to Federal-Aid construction projects:

NOTICE TO ALL BIDDERS

To report bid rigging activities call:

1-800-424-9071

The U.S. Department of Transportation (DOT) operates the above toll-free "hotline" Monday through Friday, 8:00 a.m. to 5:00 p.m. eastern time. Anyone with knowledge of possible bid rigging, bidder collusion, or other fraudulent activities should use the "hotline" to report such activities.

The "hotline" is part of the DOT's continuing effort to identify and investigate highway construction contract fraud and abuse and is operated under the direction of the DOT Inspector General. All information will be treated confidentially and caller anonymity will be respected.

STATE OF TENNESSEE

(Rev. 05-05-10)
(Rev. 11-01-10)
(Rev. 12-13-10)
(Rev. 10-31-11)
(Rev. 06-25-12)
(Rev. 08-06-12)

March 1, 2006

Supplemental Specifications - Section 100

of the

Standard Specifications for Road and Bridge Construction

March 1, 2006

Subsection 101.13, Second paragraph, first sentence, **Delete** "Revisions and Additions."

Subsection 101, Add the following definition

> **"Amendment.** A revision to the electronic bid file which may include adjusting a quantity, adding, deleting, or revising a pay item(s).

Subsection 101.47, Second sentence, **Replace** "**Revisions and Additions**" with "**Supplemental Specifications**"

Subsection 101.57, Delete the entire paragraph and replace with the following

"A company authorized to guarantee a bidder's proposal and a contractor's performance and payment obligations under a contract and which is authorized to do business in the State of Tennessee."

Subsection 102.01, Replace the entire subsection with the following:

102.01-Prequalification Questionnaire and Competency of Bidders. Each prospective bidder and subcontractor will be required to file a document entitled "Prequalification Questionnaire." The foregoing shall be filed on a form provided by the Department. The form must be filled out completely, and the truth and accuracy of the information provided must be certified by a sworn affidavit signed by an officer, partner, owner or other authorized representative of the applicant who has authority to sign contracts or other legal documents on behalf of the applicant. A prospective bidder must be prequalified by and in good standing with the Department prior to the issuance of a proposal form; however this standing does not prohibit any person from requesting or obtaining a void proposal form for any purpose other than submitting a proposal to the Department. A prospective subcontractor must be prequalified by and in good standing with the Department prior to being approved as a subcontractor. Each prospective bidder or subcontractor shall notify the Department if there is any subsequent change in the name, organization or contact information provided.

Prospective bidders' "Prequalification Questionnaire" shall be filed with the Department at least fourteen (14) days prior to the date of opening bids on any letting in which the applicant

intends to submit a bid to the Department, or at least fourteen (14) days prior to the date on which the applicant requests approval as a subcontractor under a contract awarded by the Department. Bidders intending to submit proposals consistently shall complete and submit the prequalification application annually; however, this document may be changed during such period upon submission of additional favorable reports or upon receipt by the Department of substantiated evidence of unsatisfactory performance. The Department reserves the right to request additional information and documentation to clarify and/or verify any information submitted in an applicant's prequalification application.

Prospective subcontractors will be required to pre-qualify prior to approval of the subcontracts by the Department and must also submit a prequalification application annually.

The Department reserves the right to refuse to issue a proposal form when a bidder is in default or delinquent for any of the following reasons:

a) When a "Prequalification Questionnaire" has not been filed with and examined by the Department or when the bidder, in the opinion of the Commissioner, is not qualified.

b) Default of existing contract (s).

c) When a bidder has an existing incomplete contract (s) with the Department which is behind schedule to the extent that it may hinder or prevent prompt completion of any additional contract (s).

d) When a bidder has been suspended, debarred, or otherwise excluded under the Department's rules governing contractor debarment and suspension, Chapter 1680-5-1, or under applicable Federal rules governing the suspension and debarment of contractors.

Subsection 102.02 Contents of Proposal Forms, Revise entire subsection to the following:

102.02-Contents of Proposal Forms. Upon request, the Department will furnish the Bidder an electronic proposal form which will contain an "Instructions to Bidders" form, Supplemental Specifications, Special Provisions, and proposal guaranty form. The proposal form will state the location and description of the contemplated construction. The proposal form will state the time in which the Work must be completed, the amount of the Proposal Guaranty, and the date, time and place for the opening of Proposals. The Plans and Specifications are as much a part of the Proposal form as if they were bound therein. All of the documents that are bound therein are part of the Proposal.

The prospective bidder will be required to pay the Department the sum stated in the Instructions to Bidders for each electronic proposal form. Plans will be available for the sum stated in the notice to Contractors.

Subsection 102.03 Interpretation of Quantities in Bid Schedule, Revise entire subsection to the following:

102.03-Interpretation of Quantities in Bid Schedule. The quantities appearing on the electronic bidding file are approximate only and are prepared for the comparison of bids and award of Contract. The Department does not guarantee or assume any responsibility that quantities indicated on the Plans or given in the electronic bidding file will hold in the construction of the project and the Contractor shall not plead deception or misunderstanding because of variation from these quantities or of variation from the location, character or any other conditions pertaining thereto. Payment to the Contractor will be made only for the actual quantities of work performed and accepted, and materials furnished in accordance with the

Contract. The schedule of quantities of work to be done and materials to be furnished may be increased, decreased, or omitted as hereinafter provided under **Subsection 104.02.**

Subsection 102.05 Preparations of Proposals, Revise entire subsection to the following:

102.05-Preparation of Proposals. A document entitled "Instructions to Bidders" is bound into the electronic proposal form. The proposal form shall be electronically signed in exact accordance with these instructions using the electronic bidding file furnished by the Department. The proposal guaranty form shall be handled similarly. The completed electronic bidding file, inclusive of the proposal form as described in **Subsection 102.02** and the bid prices described below, shall then be submitted to the Department in exact accordance with the applicable part of these instructions.

The electronic bidding file contains the contract bid items and associated estimated quantities. The following stipulations shall apply to electronic bidding:

(a) It is the bidder's responsibility to compare the bid quantities indicated on the plans to those contained on the electronic bidding file to ensure they are the same. Any discrepancies are to be called to the Department's attention immediately.

(b) Any revisions to the Contract Proposal regarding bid items or quantities will be accompanied by an amendment to the electronic bidding file with the revision date indicated. The amended electronic bidding file is to be utilized in the formulation of the bid.

Some proposals may contain numerous alternates. The Contractor will be required to bid on only 1 alternate for each construction item unless otherwise specified. The proper procedure for entering alternate bids is to enter prices for the intended alternate item(s) of construction and leave the undesired alternate item(s) of construction blank. The electronic bidding program allows only for 1 alternate to be bid. If prices are entered for more than 1 alternate, the electronic bidding program will not tabulate the total. Instructions for electronic bidding are available from the Headquarters Construction office and the method of entering alternates is explained therein.

The electronic bidding program will perform all extensions of the estimated quantities and unit or lump sum prices, calculate the total bid and allow the printing of a complete set of bid item sheets with appropriate subtotals and grand total bid price.

Subsection 102.06 Delivery of Proposals, Revise entire subsection to the following**:**

102.06-Delivery of Proposals. Each Proposal must be submitted via the Internet using the electronic bidding program.

No proposal will be considered or accepted which has not been received by the Department previous to the hour of the date and at the place set forth for the opening thereof in the Advertisement or Instruction to Bidders.

Subsection 102.07 Withdrawal of Proposal, Revise entire subsection to the following:

102.07-Withdrawal of Proposal. Any Bidder may withdraw his Proposal through the electronic bidding program prior to the hour of bid opening as indicated in the Advertisement for Bids and in the Instruction to Bidders

Subsection 102.08 Public Opening of Proposals, Revise entire subsection to the following:

102.08-Public Opening of Proposals. Proposals will be opened and either read publicly or bid totals will be furnished and posted on the date, time, and place indicated in the Advertisement for Bids and Instruction to Bidders. Bidders, authorized Agents, and interested parties are invited to be present.

Subsection 102.09 Rejection of Proposals, Revise entire subsection to the following:

102.09-Rejection of Proposals. Proposals will not be rejected if they condition their consideration upon the elimination of other proposals submitted by the same bidder, provided that any selection of awards will be made by the Department. A Bidder may tie the acceptance or rejection of 2 or more of his proposals on the condition that either all of his proposals are accepted or that they are all rejected, in which case his bids must be the lowest responsible bid on each project before they will be considered.

Proposals may be rejected by the Commissioner if any of the unit prices contained therein are obviously unbalanced, either excessive or below the reasonable cost analysis value.

Proposals will be rejected as being irregular if they are not prepared on the prescribed forms; if they show any omissions, alterations of form, additions, or conditions not called for, unauthorized alternate bids, or irregularities of any kind; or if they fail to contain a unit price for each item listed. In the case of authorized alternate items, a unit price on only 1 of the alternates will be required, unless otherwise specified in the Contract.

Proposals will be rejected as irregular if they are not electronically signed by an authorized representative of the bidder. The electronic signature on the electronic bidding file serves as signatures for the Proposal form, Proposal Certification form and the Proposal Bond form, if applicable. If the bidder elects to submit the Proposal Guarantee, the Proposal Guarantee Form must be signed by written signature and in the possession of the Department prior to the formal opening of the Proposal. The Agent or Attorney-in-Fact representing a Surety Company shall electronically sign the electronic Proposal Bond, if applicable. An original, dated and valid Power of Attorney for the Attorney-in-Fact must accompany the Proposal and the Contract. The accompanying Power of Attorney must be dated, and the date must be the exact same date as the date on the Proposal Guaranty Bond. The Proposal and the Proposal Guarantee Bond, including the attached Power of Attorney shall be valid and binding for 60 days subsequent to the date of opening bids. As an alternative, Surety Companies may submit an original, unnumbered Power of Attorney suitable for photocopying to the Department. Surety Companies choosing this alternative will be required to furnish the Department with a letter on the company letterhead and signed by an officer of the company authorized to appoint Attorneys-in-fact. A draft copy of this letter is available from the Department upon request.

Proposals will be rejected as irregular when submitted by a Bidder who has not qualified as required by the Commissioner under the authority given him by Tennessee Code Annotated.

All prime Contractors, except mowing and litter removal Contractors, must be licensed with the Tennessee Department of Commerce and Insurance (TDCI), Board for Licensing Contractors (BLC). The Contractor must be licensed in the general classification (e.g. Heavy Construction (HC), Highway, Railroad, Airport Construction (HRA), Specialty (S), Municipal and Utility Construction (MU), or Electrical Contracting (CE)) for the type of work in the project which they will perform. A Proposal submitted by a Bidder will be considered for Award for twenty-one (21) days after the Proposals are opened. If the Bidder does not have a license with the TDCI, on or before twenty-one (21) days after Proposals are opened, the Bidder will be

considered non-responsive and their Proposal will be rejected as irregular. The next lowest responsible Bidder would then be considered for Award. If the next lowest responsible Bidder does not have a license on or before the twenty-one (21) days after the Proposals are opened, they also would be considered non-responsive, and the subsequent Bidder will then be considered.

Bidders that are domestic or foreign Corporations, Limited Liability Companies, Limited Partnerships, or Limited Liability Partnerships, must be in good standing with the Secretary of State (i.e. have a valid Certificate of Existence/Authorization). If a Bidder is not in good standing with the Secretary of State (i.e. have a valid Certificate of Existence/Authorization) on or before twenty-one (21) days after Proposals are opened then the Bidder will be considered non-responsive and their Proposal will be rejected.

Reasonable grounds for believing that any Bidder is interested in more than 1 Proposal on the same project or that there has been collusion among the Bidders will cause a rejection of all Proposals in which the Bidders involved are interested.

A Proposal will be rejected, at the discretion of the Commissioner, if a Bidder or any member of the firm, partnership, or corporation represented in his Proposal is related either by blood or marriage within the fourth degree, computing by the civil law, to any member of the Department, or if any member of the Department will have any financial interest in the Contract.

The right is reserved to reject a Proposal from a Bidder who has not paid or satisfactorily settled all legal debts due on former contracts in force at the time of the letting.

All Proposals will be rejected that do not contain the Proposal Guaranty of the character and amount indicated in the proposal form.

Until the execution and approval of the Contract by the Department, the right is reserved to reject any and all Proposals and to waive technical errors.

Subsection 103.01 Consideration of Proposals, Revise entire subsection to the following:

103.01-Consideration of Proposals. The Internet bid shall be recognized as the only official bid.

After the Proposals are opened and read, they will be compared based on the summation of the products of the unit bid prices and the approximate quantities. The results of such comparisons will be made available to the public.

The right is reserved to reject any or all Proposals, to waive technicalities or to advertise for new Proposals, if in the judgment of the awarding authority, the best interest of the Department will be promoted thereby.

Subsection 103.04, Award of Contract, add the following as the second paragraph:

TDOT will only award a contract to a contractor that is licensed with the State of Tennessee, except if the contract is for mowing or mowing and litter removal, Contractors for mowing or mowing and liter removal type contracts must be registered with the Secretary of State, if applicable, before a project will be awarded.

Section 104-SCOPE OF WORK, Add the following to the Table of Contents **"104.02-Alterations in Plans or in Character of Construction."**

Subsection 104.02, Significant Changes in the Character of Work, (4), **Revise** subsection to the following:

4. An adjustment of the contract terms in accordance with number 2 above will be made only if the Engineer orders, in writing, an alteration in the work or in the quantities that significantly change the character of work. The term "significant change" shall be construed to apply only to the following circumstances:

   (a) When the character of the work as altered differs materially in kind or nature from that involved or included in the original proposed construction or

   (b) When a major item of work is increased or decreased by more than 25 percent of the original contract quantity (adjustments shall apply only to that portion in excess of 125 percent of original contract quantity, or in case of a decrease, to the actual quantity performed).

The above provides for adjustments resulting from formal change orders by the Engineer, in writing. Either party may initiate an adjustment and both must be in agreement before the work is performed.

Subsection 104.03 Remove and replace entire subsection to the following:

104.03-Extra Work. When unforeseen work results for any reason and is not handled as prescribed elsewhere herein, the Engineer and the Contractor will attempt to agree on equitable prices. When such prices are agreed upon, a Change Order will be executed, and a Construction Change will be issued by the Engineer. When equitable prices are not agreed upon mutually, the Engineer may issue a written order that the Extra Work be completed on a force account basis and paid for as provided in **Subsection 109.04**.

When the Change Order process is initiated, the Contractor shall be required to submit to the Project Supervisor detailed breakdowns for Materials, Labor, Equipment, Profit and Overhead. Profit and Overhead shall not exceed 15% of the subtotal of Materials, Labor and Equipment. When the Change Order is initiated for subcontractor items, the Prime Contractor's administrative cost shall not exceed 5% of the subcontractor's total (materials, labor, equipment, profit & overhead).

The requirement for detailed cost breakdowns may be waived when a Bid Item History exists for the proposed item(s), and the contractor's requested price is within 10% of the Regional, 3 year historic cost for that item. In any case, the Department reserves the right to request detailed information from the Contractor for any Change Order request.

Subsection 104.04 Maintenance of Traffic, Delete "with 30,000 or greater Average Daily Traffic or any interstate routes," from the third paragraph. **Change** " three (3)" to "seven (7)" in the third paragraph. **Delete** "(these restrictions apply to state routes with 30,000 or greater Average Daily Traffic or any interstate route):" from the fifth paragraph. **Add** "without the written consent of the Engineer." to the end of the fifth paragraph. **Delete** "In addition, any state routes less than 30,000 ADT shall have no lane closures, or any lane restrictions of any type will be allowed on Good Friday, Labor Day, Memorial Day, July 4th , and the working day immediately preceding and including the holidays of Thanksgiving, and Christmas Day without the written consent of the Engineer." from the sixth paragraph.

Subsection 104.06 First sentence, **Replace** the word "sectiot", **should read** "section"

Subsection104.11. Revise entire subsection to the following:

104.11-Final Cleanup. Before final acceptance of the Work, the entire rights-of-way, all material pits, all waste areas, all areas and access roads used by the Contractor, all streams in or over which he has worked, and all ground occupied by the Contractor, in connection with the Work, shall be cleaned of all forms, falsework, temporary structures, temporary erosion control measures, excess materials, equipment, rubbish, and waste, and all parts of the work shall be left in a neat and presentable condition. The entire right-of-way, all material pits, all waste areas, all areas and access roads used by the Contractor shall be final stabilized per the TN NPDES Construction General Permit criteria or per the agreed upon Reclamation Plan. Final cleanup shall include the mowing of the rights-of-way as required. If the project was graded under a previous Contract, final cleanup will be performed within the construction limits of work being performed and other areas disturbed or otherwise requiring cleanup due to the Contractor's operations. No rubbish, waste or debris shall be deposited on or in sight of the rights-of-way. All damage to private and public property shall be replaced, repaired, or settled for.

Subsection 104.12 Add the following to Section 104 of the Standard Specifications.

104.12- Value Engineering Change Proposal (VECP). The Contractor may request a modification to the plans, the specifications or other contract requirements based on a Value Engineering Change Proposal (VECP) submitted to the Department specifying a cost reduction change. This will not apply to a proposal unless it is identified as a VECP at the time of its submittal.

Value Engineering Change Proposals (VECP) are those which would require a change in the contract and would result in an immediate net savings to the Department without impairing essential functions and characteristics of the project, including but not limited to the service life, reliability, economy of operation, maintenance and safety features. VECP's that propose a total savings of less than $25,000 (twenty-five thousand dollars) will normally not be considered unless there are other non-monetary savings to be realized.

The Contractor may submit for review a "VECP Concept" provided that it contains enough information to clearly define the work involved and the benefits to be realized. The "VECP Concept" shall state all applicable design criteria that will be used in the VECP design. Written notification by the Department that the review has been completed and that the "VECP Concept" appears to be favorable merely indicates that the engineering and plan development may continue for submittal of the VECP proposal and is not authorization for any construction work to begin. Should the final design not reflect the expected benefits, the Department may reject the "VECP Concept" and the VECP without recourse by the Contractor.

The following information, as a minimum, shall be submitted with each proposal to the Engineer, allowing adequate time for Department analysis and processing without interference with project schedules:

(a) A description of the difference between the existing contract requirements and the proposed change, and the comparative advantages and disadvantages of each.

(b) An itemized list of the contract changes required if the VECP is accepted, and any recommendation as to how to make each such change.

(c) A separate detailed cost estimate for (1) the affected portions of the existing contract requirements and (2) the VECP.

(d) A prediction of any effects the proposed change will have on other Department costs, such as costs of maintenance and operation.

(e) A statement of the time by which a supplemental agreement must be issued in order to obtain the proposed cost reduction for the project, noting any effect on the contract completion time or delivery schedule.

(f) The date(s) of any known previous or concurrent submissions of the same proposal and any previous actions by the Department.

(g) The contract items of work affected by the proposed change, including any quantity changes.

Proposed construction changes in pavement design, right of way, relocation of bridges, etc. or changes in the environmental impact statement will not normally be considered as an acceptable VECP. The Department may determine at any point during the evaluation process that the VECP is not cost effective and summarily reject the VECP.

While a VECP is being considered by the Department, the contractor shall continue to perform the work in accordance with the requirements of the contract. The Department has no obligation but to review the VECP and shall not be liable for failure to accept or act upon any VECP or for any delays to the work due to the submitted proposal. The Department shall be the sole judge of the acceptance or rejection of a VECP, either wholly or in part. If an agreement has not been reached by the date that the contractor's VECP specifies that a decision should be made, or such other date as the contractor may have specified in writing, the VECP shall be deemed rejected.

The Contractor shall have no claim against the Department for additional costs or delays resulting from the rejection of a VECP, including but not limited to, "VECP Concept" acceptance, engineering and development costs, loss of anticipated profits, and increased material or labor costs.

The Department will not accept a VECP that is similar to a change in the plans or specifications under consideration by the Department for the project at the time the proposal is submitted; nor will the Department accept a proposal based upon, or similar to, standard specifications, general use special provisions or standard drawings adopted by the Department after the advertisement for the contract. The Department reserves the right to make such changes without compensation to the Contractor under the provisions of Subsections 104.02 and 104.03 of the standard specifications.

The Department will determine the estimated net savings from the adoption of all or any part of the VECP. In determining the estimated net savings, the Department may disregard the contract bid prices if, in the judgment of the Department, such prices do not represent a fair measure of the value of the work to be performed or to be deleted.

In the event the Department accepts the VECP the contractor thereby grants to the Department all rights to adoption of the proposal for general use on other contracts without obligation or compensation of any kind.

Acceptance of a VECP will be by supplemental agreement incorporating the changes necessary to permit the VECP, or any part of it, to be put into effect. The supplemental agreement shall also set forth the estimated net savings to the Department and further provide that the contractor be paid 50 percent of the actual net savings.

The cost to the contractor to develop and implement the VECP and any design (including redesign by a Tennessee licensed engineer, preparation of new reproducible plans, etc. and any other information requested by the Department to facilitate its review) shall be incidental to the contractor and shall in no way affect the VECP payment herein before specified. The cost to the Department to review the VECP shall be incidental to the Department and shall not affect the VECP payment.

The actual net savings will be determined when the work in the VECP and Supplemental Agreement is completed. If upon completion of the work proposed in the VECP it is determined that the supplemental agreement did not adequately address a change in quantities for other pay items that were either increased or decreased substantially as a result of the change proposal, those additional costs or savings shall be included in the actual net savings determination. A single payment will be made to the contractor representing fifty percent (50%) of the actual net savings once all items are considered.

If the completed VECP results in an increase in cost such that there is no net savings, those costs above the original contract costs as proposed in the VECP and supplemental agreement will be reimbursed at a rate of fifty percent (50%).

The preparation of the VECP, its acceptance and performance of the work shall not extend the contract completion time unless the supplemental agreement provides an extension.

Subsection 105.02 Add the following as the first paragraph:

All contractors and subcontractors directly engaged in the erection or removal of falsework, temporary structures, structural steel, precast prestressed or mild steel reinforced concrete bridge beams or girders over active highway traffic lanes, on any route, railroad or any stream deemed navigable to commercial or pleasure water craft, shall be required to submit an erection plan prepared and stamped by a Tennessee registered engineer. Falsework (steel stay-in-place forms, overhang jacks, etc.) for bridge deck construction shall be installed in accordance with the manufacturer's recommendation and will not require a submittal. See also Subsection 602.41, 602.42, and 604.06.

Subsection 105.09 Construction Stakes, Revise the 12th paragraph to the following:

All staking shall be performed by qualified engineering or surveying personnel who are trained, experienced and skilled in construction layout and staking of the type required under the contract and who are acceptable to the Engineer. The personnel shall perform this staking under the direct supervision of a Tennessee licensed Professional Engineer or a Tennessee Registered Land Surveyor experienced in the direction of such work and acceptable to the Engineer.

Subsection 105.10. Revise entire Subsection to the following:

105.10-Authority and Duties of Inspectors. Inspectors employed by or contracted with the Department will be authorized to inspect all work done and all materials furnished. Such inspection may extend to any part or to all of the Work and to the preparation, fabrication, or manufacture of materials to be used including offsite waste and/or borrow areas. The Inspectors will have the authority to reject defective material and to suspend any construction that is being improperly done, subject to final decision by the Engineer. Inspectors will not be authorized to revoke, alter, enlarge, or relax the provisions of the Specifications, nor will they be authorized to approve or accept any portion of the completed project, or to issue instructions contrary to the

Plans and Specifications. At the request of the Contractor, instructions from an Inspector may be had in writing on important items.

Subsection 105.11. Revise entire subsection to the following:

105.11-Inspection of Work. All materials and each part or detail of the Work shall be subject to inspection by the Engineer, or his representative including waste and /or borrow areas. He shall be given free access to all parts of the Work at all times and shall be furnished all information, facilities, and assistance by the Contractor as may be required to make complete and detailed inspection. Any work done or materials used without supervision or inspection by an authorized Department representative may be ordered removed and replaced at the Contractor's expense unless the Department representative failed to inspect after having been given reasonable notice in writing that such portion of the Work was to be performed.

At any time before acceptance of the Work, the Contractor shall remove or uncover such portion thereof as may be directed. If examination discloses that the Work is acceptable under the terms of the Contract, the Contractor shall return it to the original condition, and the cost of exposing the Work for examination and of returning it to the original condition shall be paid for as Extra Work. If the Work exposed and examined does not prove acceptable, the cost of uncovering, or removing, of replacing all of the material involved, in full accordance with the Specifications and Plans, and of restoring the Work, shall all be at the expense of the Contractor. When any unit of government or political subdivision or any railroad corporation is to pay a portion of the cost of the Work covered by the Contract, its respective representatives shall have the right to inspect the Work. Such inspection shall in no sense make any unit of government or political subdivision or any railroad corporation a party to the Contract, and shall in no way interfere with the rights of either party hereunder.

Upon failure on the part of the Contractor to comply forthwith with any order of the Engineer made under the provisions of this Subsection, the Engineer will have authority to cause unacceptable work to be remedied or removed and to deduct the costs from any monies due the Contractor. In the event that monies due or to become due the Contractor are not sufficient to defray the costs of such repairs or replacements, then the Department will hold the Contractor's Surety liable for the costs incurred. Any Construction performed by the Department under these provisions will not waive any provisions of the Contract nor relieve the Contractor in any way the responsibility for the construction performed by him.

Subsection 105.13. Revise entire Subsection to the following:

105.13-Completion of Specific Sections of a Project. The Department may accept a section or sections of a project before the entire project is completed. Such section(s) shall be of reasonable length, as determined by the Engineer, and shall be completed in full accordance with the Plans, Specifications and all other applicable provisions of the Contract. When such sectiot (s) is fully completed, the Engineer, after final inspection, will accept the section(s) and the Contractor will be relieved of any further work in connection therewith or any cost of maintenance thereof.

The Department may require a specific section or sections of a project to be completed prior to the completion of the entire project. Such section(s) shall be completed in full accordance with the Plans, Specifications and all other applicable provisions of the Contract. All provisions

of the above paragraph regarding final inspection, acceptance, further work and maintenance shall apply.

After any offsite waste and/or borrow area (s) are no longer needed, the contractor shall ensure that the disturbed area is stabilized per the TN NPDES Construction General Permit criteria or per the agreed upon Reclamation Plan. After the area has reached final stabilization, the contractor shall request a meeting with the Engineer to perform a final inspection. Once the area is deemed acceptable, the contractor is responsible for terminating any Contractor obtained permits.

The acceptance of a section or sections of a project shall in no way void or alter any of the terms of the Contract.

Subsection 105.15. Revise entire Subsection to the following:

105.15-Acceptance. Upon due notice from the Contractor of presumptive completion of the entire project, the Engineer will make an inspection. If all construction provided for and contemplated by the Contract is found to be completed to his satisfaction, then that inspection shall constitute the final inspection and the Engineer will make the final acceptance and notify the Contractor in writing of his acceptance as of the date of the final inspection.

If, however, the inspection discloses any work, in whole or in part, as being unsatisfactory, the Engineer will give the Contractor the necessary instructions for correction of same, and the Contractor shall immediately comply with and execute such instructions. Upon correction of the Work, another inspection will be made which shall constitute the final inspection, provided the Work has been satisfactorily completed. In such event, the Engineer will make the final acceptance and notify the Contractor in writing of this acceptance as of the date of final inspection.

If exclusive offsite waste and/or borrow area(s) were used as part of the project, the Contractor must provide the Engineer proof of permit termination for all waste and/or borrow area(s) before the Engineer can start the process for final acceptance of the project. If the Contractor wishes to continue use of the waste and/or borrow area(s), the contractor shall provide the Engineer with a letter indicating the intended use and updated documentation.

Subsection 105.18 Method of Measurement, Remove and Replace Payment Schedule Table with the following:

PAYMENT SCHEDULE

Estimate Number or Percent of Total Contract Amount of Previous Estimate	Total Percent of Construction Stakes, Lines, and Grades Lump Sum Bid Item
Estimate # 1	20%
Estimate # 2	40%
10%	50%
20%	60%
40%	70%
60%	80%
80%	100%

Subsection 106.04, Fourth paragraph, **Insert** the word "notarized" in the first sentence, as follows

"A notarized Certificate of Compliance…"

Section 107-Legal Relations And Responsibility, Left out "**107.02-Load Restrictions on Projects Under Construction."**

Subsection 107.02 Load Restrictions, Revise entire Subsection to the following:

107.02-Load Restrictions.

(a). Delivery of Materials. The gross weight of trucks delivering material to construction projects shall be governed by State Law as set forth in Tennessee Code and Federal Law. All delivery trucks shall conspicuously display the tare weight, the allowable gross weight for State Highways, and the allowable gross weight for the Interstate System on the side of each truck. The Bridge Formula shall be used to determine allowable Interstate System gross weights as defined in the Federal Highways Administration's publication, *Bridge Formula Weights.*

The operation of equipment of such weight, or so loaded, as to cause damage to structures, the roadway, or to any other type of construction will not be permitted. Hauling of materials over the base course or surface course under construction shall be limited as directed. No loads will be permitted on a concrete pavement, base, or structure before the expiration of the curing period. The Contractor shall be responsible for all damages done by equipment used in construction of the project.

In such cases where it is necessary to haul material over a structure, other than structures with posted load limitations, the Contractor shall be required to limit the gross loads to the weights listed below. The loads posted for structures with weight limitations shall not be exceeded unless adequate shoring is provided and written permission is granted by the Department's Division of Structures.

Maximum axle load .....32,000 lbs.
.....(14,515 kg.)
Maximum load per axle on tandem axles ....24,000 lbs
.....(10,886 kg.)
Maximum total load.....90,000 lbs.
.....(40,824 kg.)

The contractor will be further required to place approved temporary guides on the bridge floor, as directed by the Engineer, in order to position the wheel loads as nearly as possible directly over the bridge girders. He shall keep the bridge floor clean so as to reduce impact forces. The maximum speed permitted will be 15 miles(25 kilometers) per hour.

Upon completion of hauling over the bridge, the Contractor will be required to clean the bridge floor, curbs and rail in a manner acceptable to the Engineer.

(b). Construction Loads. Construction loads include all material, component, equipment, and personnel loads applied to the structure other than those which are a consequence of permanent elements of the structure in their final state of construction. All construction loads not essential to the active construction work shall be prohibited from placement on the structure. Construction loads on bridges applied anytime subsequent to the placement of girders shall not exceed 50 pounds per square foot based on a uniform distribution of load. Loads characterized as non-uniform in nature shall be reconciled either by analysis equating load to an effective uniform load or employment of timbers or other means approved by Engineer to distribute construction loads. Length of load distribution may be taken as the bridge beam spacing (or slab span between walls for concrete culverts) occurring at the location of load application. The Contractor will be responsible for submitting to the Engineer all analysis and supplementary support details required to effect proper construction load distribution. Contractor is advised that if concrete is mounded ahead of the screed machine during placement of the deck, that any portion extending above the screed elevation is considered a construction load in applying the provisions of this section. Construction loads shall be placed as optimally as reasonable to minimize loads on the structure. When the area occupied by construction loads in any structure span exceeds 25% of the area of that span the Contractor shall be required to submit a diagram detailing the location, character, sequence and weight of all construction loads applied to the structure to TDOT Division of Structures for approval. This submittal shall be executed a minimum of 30 days in advance of the planned operation. These provisions supplement those of Subsection 604.28.

Subsection 107.06 Federal Aid Provisions (b). Revise Subsection b to the following:

All waste and borrow areas outside the project right-of-way must be in compliance with Section 106 of the National Historic Preservation Act. The Contractor must furnish the TDOT Engineer and the Environmental Division with an Archaeological Clearance certified by the State Historic Preservation Office on all non-commercial material sources requiring excavation and/or fill.

Regardless of prior certification, if prehistoric remains or human burial sites are encountered at any time during construction, such operations shall be suspended and the Engineer and the State Historic Preservation Office shall be notified immediately.

All waste and borrow areas from outside the project right-of-way must comply with Section 7 of the Endangered Species Act. The contractor must furnish the TDOT Engineer and the Environmental Division with Threatened and Endangered Species Clearance from the Tennessee Wildlife Resource Agency and the U.S. Fish and Wildlife Service on all waste and borrow sites located outside project right-of-way.

The Archaeological Clearance certification, and the Threatened and Endangered Species Clearance from the Tennessee Wildlife Resource Agency and the U.S. Fish and Wildlife Service, must be furnished to the TDOT Engineer and the Environmental Division Permits Section, 30 days prior to work being started on all waste/borrow sites outside of the project right-of-way.

Subsection 107.20 No Waiver of Legal Rights, Delete and replace with the following:
107.20-No Waiver of Legal Rights. The Department shall not be precluded or estopped by any measurement, estimate, or certificate made either before or after the completion of the Work or

by final acceptance of the Work according to **Subsection 105.15** from showing the true amount and character of the Work performed and materials furnished by the Contractor, nor from showing that any such measurement, estimate, or certificate is untrue or is incorrectly made, nor from showing that the Work or materials do not in fact conform to the Contract. The Department shall not be precluded or estopped, notwithstanding any such measurement, estimate, certificate and payment, or acceptance in accordance therewith, from recovering from the Contractor or his Sureties, or both, such overpayment or damages as it may sustain or damages due to the Contractor's failure to comply with the terms of the Contract. The Department shall retain and apply monies owed to the Contractor under any Department Contract, or claim and recover by process of law such sums, in order to correct any error or make good any defects in the Work or materials.

Neither the acceptance by the Department, or any representative of the Department, nor any payment for or acceptance of the whole or any part of the Work, nor any extension of time, nor any possession taken by the Department, shall operate as a waiver of any portion of the Contract or of any power herein reserved, or of any right to damages. A waiver by the Department of any breach of the Contract shall not be held to be a waiver of any other or subsequent breach.

Subsection 108.06- Determination of Time for Completion, Replace entire subsection with the following:

108.06-Determination of Time for Completion. The Contractor shall complete the Work in full accordance with **Subsections 104.01** and **105.03** within the number of working days or calendar days or by the completion date stipulated in the Proposal. If a number of working days govern in connection with a specific Contract, the Engineer will apprise the Contractor, monthly, of the number of accumulated working days charged against him. Protest by the Contractor, in such connection, shall be filed within five working days of receipt of the information. The Engineer will review such protest and the supporting information and will render decision either affirming or correcting the accumulated number of working days previously reported.

When the contract time is on a calendar day basis, it shall consist of the number of calendar days stated in the Contract counting from the effective date of the Engineer's order to commence work, including all Sundays, holidays and non-work days. All calendar days elapsing between the effective dates of any orders of the Engineer to suspend work and to resume work for suspensions not the fault of the Contractor shall be excluded.

When the Contract completion date is a fixed calendar date, all work on the project shall be completed on or before that date.

If satisfactory fulfillment of the Contract requires performance of work in greater quantities than those set forth in the proposal, the contract time allowed for performance may be proportionally increased for major items only, as defined in section 101.64, if the Engineer determines that the increase in quantities for the major items has affected the completion of the project. If the contract requires a mandatory Critical Path Method (CPM), or contains an incentive clause, or a bonus clause for early completion, the Engineer shall not proportionately increase the working time. The Engineer will determine if the added work or increased quantities impact the submitted critical path workflow and will adjust the working time accordingly, but the incentive clause date or the bonus clause date will not be adjusted unless otherwise allowed in the Contract.

If the Contractor finds it impossible for reasons beyond his control to complete the Work within the contract time as specified or as extended in accordance with the provisions of this

Subsection, he may, at any time prior to the expiration of the contract time specified or as extended, make a written request to the Engineer for an extension of time setting forth therein the reasons which he believes will justify the granting of his request. The Contractor's plea that insufficient time was specified is not a valid reason for extension of time. If the Engineer finds that the Work was delayed because of conditions beyond the control and without the fault of the Contractor, he may extend the time for completion by a properly executed Supplemental Agreement in such amount as the conditions justify. The extended time for completion shall then be in full force and effect the same as though it were the original time for completion except incentive clause date or the bonus clause date will not be adjusted unless otherwise allowed in the Contract.

Final acceptance will be made by the Engineer as prescribed in Subsection 105.15 and in accordance with the following:

State Funded Projects:

Upon presumptive completion of the project and due notice from the Contractor, the Engineer will make an inspection. If all items of work are completed to his satisfaction, the Engineer will accept the project and stop time charges as of the date of the inspection. However, if the inspection reveals that some items of work remain to be completed, the Engineer will direct the Contractor to complete these items and continue charging time until all work has been satisfactorily completed, regardless of the number of inspections required prior to project acceptance.

Federal-Aid Projects:

The procedure for Federal-aid projects will be the same as noted above for wholly State funded projects except that time charges will be suspended during the time interval between presumptive acceptance by the Engineer and the date of inspection by the Federal Highway Administration (FHWA). Should the FHWA Engineer find any work unsatisfactory, time charges will be resumed the day after the inspection during which such determination is made until correction of such work.

In the event further inspections by FHWA are required, the procedure described herein will be repeated until final acceptance of the project.

Subsection 108.07-Failure to Complete Work on Time, Remove entire subsection and **replaced** with the following:

108.07-Failure to Complete the Work on Time. For each calendar day over and above the stipulated completion date on which any portion of the Work remains incomplete, a sum of money shall be deducted from monies due the Contractor, not as a penalty but as liquidated damages. The amounts to be deducted shall be as set forth below.

Original Contract Amount			Daily Charge
$0	-	$500,000	$170.00
>500,000	-	1,000,000	$420.00
>1,000,000	-	2,000,000	$740.00
>2,000,000	-	10,000,000	$1,000.00
>10,000,000	-	20,000,000	$1,600.00
>20,000,000			$1,800.00

Permitting the Contractor to continue and finish the Work or any part of it after the time fixed for its completion, or after the date to which the time for completion may have been extended, will in no way operate as a waiver on the part of the Department of any of its rights under the Contract.

Subsection 108.08(a) Default, Replace the first sentence with the following:

The Department reserves the right to terminate, by a written Contract Termination Notice, any Contract, of which these Specifications are a part, if the Contractor:

Subsection 108.08(b) Without Fault, Replace the first sentence to the following:

The Department may, by a written Contract Termination Notice, with the approval of the Federal Highway Administration where applicable, terminate any Contract or a portion thereof after determining that for reasons beyond the control of the Contractor, the work contracted for cannot be completed. Such reasons for termination may include, but need not necessarily be limited to one of the following:

Subsection 108.08(c) New, Insert (c) Convenience with the following paragraphs.

(c) Convenience

The Department may, by a written Contract Termination Notice, with the approval of the Federal Highway Administration where applicable, terminate any contract, or any portion thereof for the Department's convenience, when the Engineer determines that, a termination is in the best interest of the Department.

A termination of the contract for convenience may be directed at any time after the Department has made a determination to award a contract. Such reasons for termination may include, but are not limited to:

1. Insufficient funds by the Department due to extenuating circumstances;

2. Orders from duly constituted authorities relating to energy conservation;
3. Restraining orders or injunctions obtained by third party citizen action resulting from federal or state environmental protection laws or where acts or omissions or persons or agencies whether or not the Contractor primarily caused the issuance of such order or injunction;
4. Occurrence of an environmental situation of a significant nature that would require extensive and time-consuming delays in the work for the purposes of identification, evaluation, and possibly mitigation;
5. Occurrence of a previously undiscovered error in the bid documents;
6. Any other circumstances determined by the Department to be in the best interest of the Department and/or public.

In addition to the general reservation of the right to terminate for convenience under this section, the bidding documents may provide for a termination of the contract for convenience under this section upon the occurrence or non-occurrence of a specified event after bid opening.

Under any of the above circumstances for termination, the Engineer will deliver to the Contractor and the Surety a written Contract Termination Notice for reasons that will be set forth therein. The Notice shall specify the extent to which performance of work is terminated under the Contract and the effective date of termination. Unless otherwise directed by the Engineer, upon receipt of a Contract Termination Notice, the Contractor, or his Surety, shall immediately:

1. Stop work as directed in the Notice.
2. Place no further orders or subcontracts for materials, services or facilities except as approved by the Engineer to complete work not terminated.
3. Terminate all orders and subcontracts for the terminated work.
4. Deliver to the Engineer completed or partially completed plans, drawings, information and other property required to be furnished under the contract.
5. Take any action that the Engineer directs to protect and preserve contract-related property that is in the possession of the contractor in which the Department has or may acquire an interest.
6. Provide all other information included in this section and/or as requested by the Engineer.
7. Complete all work not terminated.

If the Contract or any portion thereof is terminated before completion of all items of work in the contract; payment will be made for the actual number of units of items of work completed at the contract unit prices and as mutually agreed for items or work partially completed. No claim for loss of overhead or anticipated profits, including anticipated earnings on usage of owned equipment, and impact, delay, or other direct or indirect costs resulting from this termination, will be compensated as part of any settlement. Items that are eliminated in their entirety by the termination, will be paid according to **subsection 109.05**.

Completed or partially completed work will be paid for at the contract unit prices of the actual number of units or items of contract work completed prior to the effective date of the termination, or on a force account basis, as determined by the Engineer.

Reimbursement for organization of the Work (when not otherwise included in the contract) and moving equipment to and from the job will be considered where the volume of work completed is too small to compensate the Contractor for these expenses under the contract unit prices, the intent being that an equitable settlement will be made with the Contractor. The Department may consider reimbursing the Contractor for actual work done and actual costs incurred by the Contractor before notification. It may include only such cost items as mobilization, subcontractor costs not otherwise paid for, actual idle equipment costs only for any time the work is stopped in advance of the termination date, and guaranteed payments for private land usage as part of the original contract (when not otherwise included in the contract). Any claim request for additional costs, not covered in this section or elsewhere in the contract, shall be submitted within 60 calendar days of the effective termination date.

Acceptable materials, obtained by the Contractor for the Work, that have been inspected, tested, and accepted by the Engineer, and that are not incorporated in the Work, may, at the option of the Engineer, be purchased from the Contractor. The Contractor shall submit the proof of actual cost, as shown by receipted bills and actual cost records. The Engineer, as shown by actual cost records, may designate all actual costs for delivery at such points of delivery to be added to this cost. If the Engineer and the Contractor do not agree to purchase such materials, the Department may reimburse the Contractor for any reasonable restocking fees and handling costs incurred by the Contractor in returning said materials to the vendor. In the event that only portions of the contract work are eliminated, the Department may stop delivery and payment for materials made unnecessary.

Termination of a Contract or a portion thereof shall not relieve the Contractor of his responsibilities for the completed Work, nor shall it relieve his Surety of its obligation for and concerning any just claims arising out of the Work performed.

Subsection 109.02 Add the following to the end of Subsection 109.02:

The prime contractor must pay each subcontractor for work performed under its subcontract no later than 30 days from the date the prime contractor receives payment for the work from the Department. The prime contractor must pay each material supplier for materials supplied to the project no later than 30 days from the date the prime contractor receives payment for the material from the Department. In addition, all subcontractors, at all tiers, must make payment no later than 30 days to each subcontractor and material supplier for work and/or material provided for the project once they receive payment from the prime contractor or subcontractor. The prime contractor shall provide monthly payment certification to the Department entitled "Prompt Payment Certification Form". An officer of the prime contractor shall sign the "Prompt Payment Certification Form". The Department will withhold estimate payments if information is not submitted. The Department will withhold estimate payments for subcontracted items if subcontractors, at any tier, or materials suppliers are not paid. Also, all required certifications must be in the field office and accepted before such work is deemed satisfactorily completed. Any delay or postponement of payment from the above referenced time frame will result in accrual of interest as provided under TCA, Section 12-4-707(b).

The prime contractor, or subcontractors, at any tier, shall not withhold any retainage from progress payments made to their subcontractors.

The contractor shall also document on the "Prompt Payment Certification Form" the actual amount paid to any certified Disadvantaged Business Enterprise (DBE) or certified Small Business Enterprise (SBE) during the estimate period certification is being made.

Subsection 109.04-Methods of Payment for Extra Work, (a) Labor, Add "for profit and overhead" to the end of the second sentence.

Subsection 109.04-Methods of Payment for Extra Work, (c) Materials, Add "for profit and overhead" to the end of the sentence.

Subsection 109.04-Methods of Payment for Extra Work, (d) Equipment, Revise to the following:

(d) Equipment

Equipment used for Force Account work shall be of the size, type and number necessary to perform the required work in an economic and expeditious manner.

The Contractor shall submit for approval a list of all contractor owned equipment or equipment rented from another contractor (i.e. an entity not in the commercial rental business), including the manufacturer, make, model, year of manufacture, type of fuel, and other necessary information to determine proper hourly payment rate. The hourly rate shall not exceed the Monthly rate less the regional adjustment and age adjustment, as published in "*The Rental Rate Blue Book for Construction Equipment*" published by Equipment Watch, Prism Business Media, divided by 176. The contractor shall also submit for approval the hourly operating cost for all equipment. The hourly operating cost shall include all costs and labor for routine maintenance and servicing, including but not limited to fuel, lubrication, filters, blades, belts, pumps, lines, hoses, teeth, tires, tracks, etc.. The hourly operating costs shall not exceed the rates published in "The Rental Rate Blue Book for Construction Equipment". The rental rates will be paid for the actual time that the equipment is in operation. The weekly, daily or hourly premium equipment rates shown in the Blue Book shall not be used.

Contractor owned equipment or equipment rented from another contractor that has been approved for force account work that remains idle or on standby will be paid at a rate of 50% of the hourly rate calculated above. Idle equipment shall not be paid for more than 8 hours in a day or 40 hours in a week or on days of inclement weather when no other work is taking place. Equipment that is inoperable will not be paid idle time. The Department will determine if it will be more cost effective to pay idle time on approved equipment or for multiple mobilizations.

For equipment being used to complete force account work for part of the day and idle for a part of a day, the total hours that can be charged will be 8 hours, unless the equipment is in operation for more than 8 hours. Idle time will not be paid for any equipment which operates more than 8 hours in a day

Equipment that is rented or leased from a commercial rental company will be paid for at actual invoice price, provided the prices are fair and reasonable but not to exceed the monthly rate published in "The Rental Rate Blue Book for Construction Equipment". The Department will pay a mark up of 15% for all rented/leased equipment for profit and overhead. The contractor shall also submit for approval the hourly operating cost for all rented/leased equipment if the rent/lease agreement does

not include these expenses. The mark up will not apply to hourly operating costs. Rented or leased equipment will not be subject to payment for idle time. The Department will determine if it will be more cost effective to leave the equipment on site idle paying invoice price or pay for multiple mobilizations.

Subsection 109.04-Methods of Payment for Extra Work, (e) Transporting Equipment, Revise to the following:

(e) Transporting Equipment

When it is necessary to bring approved equipment to the project site, the contractor will be reimbursed for these costs and the costs to return it to its original location. The cost to return shall not be more than the cost to deliver. If a piece of equipment is delivered to the project site and used for other contract pay items then return costs will not be reimbursed.

If the equipment is transported by the contractor, then payment will be by hourly rate as calculated in 109.04 (d) for other equipment. If the equipment is transported by common carrier, then payment will be the actual invoiced amount with no markup.

Subsection 109.04-Methods of Payment for Extra Work, (f) Subcontracting and Professional Services, Revise to the following:

(f) Subcontracting and Professional Services.

The contractor will be paid an administrative fee of 5% for all approved force account work completed by subcontractors and for approved special services associated with the force account work. Invoices shall be submitted for all subcontracted and professional services rendered.

Subsection 109.04-Methods of Payment for Extra Work, (g) Miscellaneous, Revise to the following:

(g) Miscellaneous.

No additional allowance will be made for general superintendence (Superintendent), time keepers, the use of small tools, or other costs for which no special allowance is herein provided.

Subsection 109.04-Methods of Payment for Extra Work, (h) Compensation, Revise to the following:

(h) Compensation.

The Contractor's representative and the Engineer shall compare records of the cost of work done as ordered on a force account basis at the end of each day's work.

Subsection 109.04-Methods of Payment for Extra Work, (I) Statements, Revise to the following:

(i) Statements.

No payment will be made for work performed on a force account basis until the Contractor has furnished the Engineer with duplicate certified itemized statements of the cost of such force account work detailed as follows:

1. Name, classification, date, daily hours, total hours, rate, and extension for each laborer and foreman.
2. Designation, dates, daily hours, total hours, rental rate, and extension for each unit of machinery and equipment.
3. Quantities of materials, prices, and extensions.
4. Transportation of materials.
5. Cost of property damage, liability and workmen's compensation insurance premiums, unemployment insurance contributions and social security tax.

Statements shall be accompanied and supported by receipted invoices for all materials used, including transportation charges. However, if materials used on the force account work are not specifically purchased for such work but are taken from the Contractor's stock, then in lieu of the invoices, the Contractor shall furnish an affidavit certifying that such materials were taken from his stock, that the quantity claimed was actually used, and that the price and transportation claimed represent the actual cost to the Contractor.

Subsection 109.06, Remove and Replace the entire subsection with the following:

When requested in writing by the Contractor and approved by the Engineer, partial payment of non-perishable materials that will be permanently incorporated into the project may be made. These materials must be stockpiled in an approved manner on or near the project site or in special cases at an off-site location because of fabrication. These off-site locations should be limited to special cases where the material cannot be readily stockpiled at the project site such as steel structure components, prefabricated bridge components, etc. Material stored at an off-site location shall be clearly marked with the project information. A map noting the location shall be provided to the Project Supervisor. The material stockpiled on the project site shall be stored in an approved manner so that the quality of the material is not compromised. No payment will be made prior to inspection and documentation by a TDOT representative. Material, whether stored on-site or off-site, shall be readily identifiable in order to reference the quantity and assigned project.

Materials that may be included in partial payments: aggregates (stored on project, not at quarry), reinforcing steel, bridge piling, structural steel (fabricated units or steel delivered to fabricator if designated for particular project), precast concrete structures, traffic signal equipment, electrical equipment, fencing materials, sign materials, guardrail, and others as approved by the Project Supervisor.

Materials that may not be included in partial payments: Living or perishable plant materials, seed, fuel, used materials, form lumber, falsework, temporary erosion items, and other temporary items that will not become part of the completed work.

The payment for stockpile materials is initiated by the Contractor with a request to the Project Supervisor. The request shall be made in writing and shall contain the following information:

1. Request for stockpile payment that includes the following information:
   a. Contract and Project Numbers
   b. Item Number and Description as stated in the Contract Proposal

   c. Quantity and Unit of measure
   d. Conversion factor, if applicable
2. Written statement of assurance that material will be used on the specific project
3. Written consent of Prime Contractor's surety
4. Copy of certified paid invoice (in order to certify, a representative of the supplier must mark the invoice as paid in full, sign and date)
5. If the certified paid invoice is unavailable, a stockpile payment may be conditionally approved with receipt of the Surety's consent and a copy of the unpaid invoice. However, the contractor must submit the certified paid invoice within 30 days following the date of the progress payment for which the stockpiled material was paid. If the certified paid invoice is not submitted, the stockpile payment will be deducted from the following progress payment. In addition, any further requests for stockpile payment of that item must be accompanied by a certified paid invoice, or stockpile payment will not be paid.
6. Material certifications/Test reports for the material.

Partial payment will only be considered for an invoice or accumulation of invoices totaling $5,000.00 for each eligible pay item. Individual invoices shall not total less than $2,500.00. Invoices may include tax and freight. Partial payment shall not exceed 100% of the invoice amount or 75% of the contract unit price, whichever is less.

Stockpile payments shall not exceed the contract amount, unless the contract amount is increased by an approved change order. Payments will not be made for items that will be incorporated permanently into the project within 30 days from request of stockpile payment.

The Contractor shall assume full responsibility for the stockpiled materials from the elements and against loss or damage by any cause. In the event any of these stockpiled materials become lost, stolen, impaired or damaged after partial payment has been made, the monetary value of the lost, stolen, impaired or damaged material as may have been paid for in a current estimate will be deducted from the next estimate, and no further payment will be made until such material has been satisfactorily replaced in accordance with specification requirements.

The department will not withhold retainage from the Contractor. No monthly estimate or partial payment will be made when the total value of the work done since the last previous monthly estimate amounts to less than $1000.00.

After the first partial payment, the Department reserves the right to withhold any subsequent partial payments until it has been completely satisfied by the Contractor that his labor, material, and equipment costs and any claims for other reasons are paid on a current basis. Should any defective construction or material be discovered, or should a reasonable doubt arise as to the satisfactory quality of any part of the construction completed prior to final acceptance and payment, there will be deducted from the first estimate rendered after the discovery of such defective or questioned construction, and if necessary, from subsequent estimates, an amount sufficient to insure the replacement of such work by the Contractor or by others as may prove necessary.

Subsection 109.08 New, insert the following:

109.08-Payment of Costs Owed to the Department.

The Contractor, without prejudice to the terms of the Department Contract, shall be liable to the Department for any or all of the following: fraud or such gross mistakes as may amount to fraud, the Department's rights under any warranty or guarantee, or any latent defects in the work.

The Department reserves the right to set off against any amount otherwise due the Contractor or his Sureties, or both, under this Contract or under any other contract or arrangement, including payment obligations under **Section 109.04** of these Specifications, that the Contractor or his Sureties, or both, has with the Department, the following:

1. any costs that the Department has incurred due to noncompliance with this contract by the Contractor or his Sureties, or both, and
2. any other amounts that are due and payable from the Contractor or his Sureties, or both, to the Department

STATE OF TENNESSEE

Rev. 10-20-07
Rev. 03-23-09
Rev. 05-5-2010
Rev. 08-06-2012

March 1, 2006

Supplemental Specifications - Section 200

of the

Standard Specifications for Road and Bridge Construction

Subsection 201.03-Clearing and Grubbing. Replace the entire subsection with the following:

201.03-Clearing and Grubbing. The Engineer or Contractor when required will establish rights-of-way lines and construction lines, and the Engineer will designate all trees, shrubs, plants, and other objects to remain. The rights-of-way necessary for construction, as directed by the Engineer, shall be cleared of all dead trees, stumps, brush, projecting roots, hedge, weeds, pole stubs, logs, and other objectionable material. All trees, stumps, roots, pole stubs, brush, hedge, and other protruding obstructions within the area bounded by lines 5 ft. (1.5 m) outside the construction lines shall be completely grubbed except sound undisturbed stumps and roots which will be a minimum of 5 ft. (1.5 m) below subgrade or slope of embankment may be allowed to remain in place provided undercutting or other corrective measures, or topsoil stripping is not stipulated in the Plans or directed by the Engineer and providing stumps do not extend more than 6 in. (15 cm) above the ground surface. This work shall be done in advance of excavation and embankment operations.

Before construction activities begin, two types of areas must be marked within the project site. First, the limits of disturbance (clearing limits) must be clearly marked using staking or another acceptable visible marking method. Second, any environmentally sensitive areas such as streams, wetlands, buffers and ARAP boundaries that are included in the project boundaries must be marked with highly visible markers. Highly visible markers must be readily visible to project personnel including equipment operators.

Clearing and grubbing operations shall be avoided in areas designated to remain undisturbed as specified in the project's Stormwater Pollution Prevention Plan and any other applicable environmental permits. For clearing and grubbing activities associated with borrow pits or waste areas furnished by the Contractor, the borrow pits or waste areas must be approved in advance by the Project Supervisor, the Environmental Coordinator, and the Environmental Division and operated and maintained in accordance with the Procedures for Providing Offsite Waste and Borrow on TDOT Construction Projects Manual.

When embankments are to be constructed in swampy areas, and undercutting or other corrective measures are not stipulated in the Plans or directed by the Engineer for these areas, undisturbed trees and stumps may be cut off at not more than 6 in. (15 cm) above the ground surface or low water level and the stump and root mass remain in place, if approved by the Engineer.

Unless marked for removal by the Engineer, living trees more than 5 ft. (1.5 m) outside the construction lines of the road are to be undisturbed, and are to be protected by the Contractor during construction of the project. Cut or scarred surfaces of trees or shrubs shall be treated with a paint prepared especially for tree surgery.

Clearing of hedge, weeds, pole stubs, logs, and other objectionable material inside the rights-of-way but outside the construction lines shall be completed to the ground surface.

Low hanging branches and unsound or unsightly branches on trees or shrubs designated to remain shall be removed as directed. Branches of trees extending over the roadbed shall be trimmed to give a clear height of 20 ft. (6 m) above the roadbed surface. All trimming shall be done by skilled workmen and in accordance with good tree surgery practices.

Trees more than 5 ft. (1.5 m) outside the construction lines and marked for removal by the Engineer shall be cut off within 6 in. (15 cm) of the ground surface. All stumps more than 5 ft. (1.5 m) outside the construction lines shall be trimmed to within 6 in. (15 cm) of the ground surface.

Wood debris that is chipped on site shall be properly disposed of so that does not become part of embankment. Within the areas where embankments are to be constructed, all depressions resulting from grubbing operations shall be backfilled with suitable excavation material and compacted in accordance with the provisions of Section 205 to natural ground elevation before embankment construction is started.

Depressions in excavation areas which are below finished subgrade elevation resulting from grubbing operations shall be backfilled with suitable material and compacted to finished subgrade in accordance with the provisions of Section 205 during the excavation operations.

Backfilling shall be completed a satisfactory distance ahead of embankment construction operations.

All slopes of cuts, embankments, ditches, channels, waterways and all structures both old and new, shall be cleared of all brush, hedges, weeds, heavy vegetation, and other objectionable material; and shall be maintained in a neat and satisfactory condition until the project is accepted.

Areas approved as borrow pits by the Engineer shall be cleared and grubbed of all trees, stumps, brush and heavy vegetation. Areas designated for obtaining construction material other than borrow material shall be cleared and grubbed of trees, stumps, brush and vegetation, and in addition shall be stripped of overburden laying above the material to be obtained. This work shall be completed well in advance of the removal of borrow or construction materials. Any offsite borrow areas must also be in accordance with the Procedures for Providing Offsite Waste and Borrow on TDOT Construction Projects Manual

Areas within the limits of all drainage structures shall be cleared of all objectionable material to within 3 in. (75 mm) of the ground surface. Such areas shall extend the full length of the structures, as measured along the center-line of the highway, and to the rights-of-way lines along lines parallel to the centerline of the inlet and outlet channel or drainage of the structure. These areas shall also include the entire area of all easements obtained for drainage purposes.

Subsection 201.04- Disposal of Debris. Replace second paragraph with the following:

When permitted by the Engineer, perishable materials and debris may be removed from the rights-of-way and disposed of at locations off the project, outside the limits of view from the project during all seasons as long as the work is in accordance with the Procedures for Providing Offsite Waste and Borrow on TDOT Construction Projects Manual. The cost involved shall be

included in the bid cost for the project. In addition the material shall be disposed of in accordance with all applicable laws and ordinances regarding solid wastes as per Tennessee Department of Environment and Conservation requirements.

Subsection 201.05-Method of Measurement. Add the following to the end of the first paragraph.

"When the bid schedule contains an item for Clearing and Grubbing on a lump sum basis, no measurement of area will be made."

Subsection 201.06-Basis of Payments. Revise entire subsection to the following:

"Payment for Clearing and Grubbing shall be made at the contract unit price per lump sum and shall be full compensation for completing the Clearing and Grubbing as outlined on the Plans and in these Specifications."

Payment for Clearing and Grubbing (Borrow Pits) at the contract unit price per acre (hectare) shall be full compensation for completing the Clearing and Grubbing of Department furnished borrow pits as outlined in the Plans and in these Specifications. These borrow areas will be furnished in accordance with the Procedures for Providing Offsite Waste and Borrow on TDOT Construction Projects Manual.

Subsection 202.03-General. Replace the last sentence of the first paragraph with the following:

Material disposed of on private property shall be disposed of in accordance with the Procedures for Providing Offsite Waste and Borrow on TDOT Construction Projects Manual.

Subsection 202.04- Removal of Bridges, Culverts, and Other Drainage Structures. Replace the entire subsection with the following:

202.04-Removal of Bridges, Culverts, and Other Drainage Structures. Bridges, culverts and other drainage structures in use by traffic shall not be removed until satisfactory arrangements have been made to accommodate traffic. All bridge, culvert and drainage structure removal from streams must comply with any terms and conditions specified in applicable environmental permits, including the TN Construction General Permit. The Contractor will use highly visible markers to clearly mark permit boundaries and disturbed area limits.

Unless otherwise specified or directed, such portions of the substructures of bridges located in a stream shall be removed to 1 ft. (30 cm) below the adjacent ground level or natural stream bottom or the lowest scour elevation shown on the contract plans if shown to uncover the existing portion of the substructure. An exception to the above rule may occur if such portions of the substructure of a bridge are located in a stream or wetland, and then it shall be subject to the requirements set out in the permit form of the applicable State and Federal agencies approving the location and plans and authorizing the construction of the bridge. Where such portions of existing structures lie wholly or in part within the limits for a new structure, they shall be removed as necessary to accommodate the construction of the proposed structure.

Steel bridges, precast or precast prestressed bridges and wood bridges designated to become the property of the Department shall be carefully dismantled without unnecessary damage. All such material shall be stored as specified in **Subsection 202.03.**

The removal of bridge decks shall be governed by the following:

1. Where bridge decks are to be wholly removed, but the girders are to remain in service;

   A. If the contractor elects to employ concrete saws to aid in the removal of the concrete deck, sawing transverse, the depth of the cut may not exceed the following :

      - Decks supported by steel beams or girders, 3-in. (75mm.)
      - Decks supported by prestressed concrete beams, 3-in. (75mm.)
      - Decks of cast-in-place hollow box or t-beam bridges, 1-in. (25mm.)

   B. The remainder of the slab depth under the cuts must be completed using pneumatically or electrically operated chipping hammers, not exceeding 60 lbs. (27.2 kgs.) in weight.

   C. Longitudinal saw cuts may be full depth, but no closer than –

      - Decks supported by steel beams or girders, within 1-in. (25 mm) of the widest top flanges.
      - Decks supported by prestressed beams, within 1 in. (25 mm) of the top flange.
      - Decks of hollow boxes or t-beam bridges, within 1-in. (25 mm) of the web, unless otherwise noted on the contract plans.

2. Where only the slab overhangs are to be removed, and if the contractor elects to employ concrete saws to aid in the removal of overhangs, only the top 1-in. (25 mm) of the slab may be saw cut. Pneumatically or electrically operated chipping hammers, not exceeding 60 lbs. (27.2 kgs.) in weight may be used to remove the remainder of the concrete. Care shall be taken not to damage transverse slab reinforcing bars.

3 Where bridge decks are to be removed as part of complete bridge demolition and the contractor elects to employ concrete saws in the removal of the deck, the depth of the cuts may not exceed the following:

   A. Decks supported by steel beams or girders, the plans depth of slab minus 1-in. (25 mm).
   B. Decks of hollow box or t-beam bridges; if not otherwise shown on the contract plans, the contractor shall submit a plan to the engineer for approval.

The use of hoe rams, pneumatic shears, pavement breakers, or other heavy equipment to remove slabs, where girders or adjacent slab portions are to remain, is strictly prohibited.

Blasting or other operations necessary for the removal of an existing structure or obstruction, which may damage new construction, shall be completed prior to placing the new work, or adequate precautions shall be taken to prevent such damage.

Subsection 203.01 Description. Add the following as the last paragraph to this Subsection:

The Contractor must address both natural and created steep slope areas as required in the TN Construction General Permit. Steep slope requirements for erosion prevention and sediment controls and stabilization shall be in accordance with the TN Construction General Permit and any other applicable environmental permits.

Subsection 203.02-Classification. Replace the entire subsection with the following:

(a) Road and Drainage Excavation (Unclassified).

All excavation performed under this Section, including portland cement concrete located above subgrade elevation, other than Borrow Excavation, Channel Excavation, and Undercutting, will be considered unclassified excavation regardless of the nature of the material excavated.

(b) Borrow Excavation.

Borrow Excavation shall consist of material required for the construction of embankments or other portions of the work and shall be obtained from approved sources outside the right-of way limits in accordance with the Procedures for Providing Offsite Waste and Borrow on TDOT Construction Projects Manual, unless otherwise designated in the Plans. However, any material, other than Borrow Excavation (Unclassified), as may be found in the excavation that meets the specifications of the designated borrow material may be used in the project in accordance with the conditions prescribed in **Subsection 104.10**. However, if the flattening of certain cut slopes on projects graded under previous contracts is desirable and approved in writing by the Engineer, the Contractor will be permitted to use this material for borrow provided the material is satisfactory and in accordance with plans approved by the Engineer, and provided he complies with the requirements of **Subsection 203.04** regarding borrow areas. Borrow material shall not be obtained from wetland areas, unless otherwise noted on the Plans and approved by applicable environmental permits

Borrow shall be classified as Borrow Excavation (Solid Rock), Borrow Excavation (Graded Solid Rock), Borrow Excavation (Unclassified), or Borrow Excavation (Select Material). Borrow Excavation (Solid Rock) shall consist of the removal and satisfactory placement of non-degradable rock which cannot be economically excavated by the proper use of a power shovel or without the use of explosives. Borrow Excavation (Unclassified) shall consist of the removal and satisfactory placement of all approved material encompassed under the classification of Borrow Excavation (Solid Rock) and all other approved material.

Borrow Excavation (Graded Solid Rock) shall consist of the removal and satisfactory placement of sound, non-degradable rock with a maximum size of 3 ft. (1 m). At least 50 percent of the rock shall be uniformly distributed between 1 ft. (30 cm) and 3 ft. (1 m) in diameter and no greater than 10 percent shall be less than 2 in. (50 mm) in diameter. The material shall be roughly equi-dimensional in shape. Thin, slabby material will not be accepted. The Contractor shall be required to process the material with an acceptable mechanical screening process that produces the required gradation. When the material is subjected to five alternations of the sodium sulfate soundness test (AASHTO T 104), the weighted percentage of loss shall be not more than 12. The material shall be approved by the Engineer before use.

Borrow Material other than solid rock shall be AASHTO M 145, classification A-6 or better if reasonably available. If classification A-6 is not reasonably available, the borrow shall be no worse than the predominant soil type in the roadway excavation based on AASHTO classification.

Borrow Excavation (Select Material) for special construction purposes shall meet the requirements set forth in the Contract.

Material obtained from an approved borrow source off the right-of-way as provided in this Subsection shall not be utilized to produce processed aggregate as described in Section 903. In no case shall material excavated from an offsite borrow source be utilized in base or other paving courses above the elevation of the subgrade.

Unless otherwise designated in the Contract, the Contractor shall make his own arrangements for obtaining borrow material in accordance with the Procedures for Providing Offsite Waste and Borrow on TDOT Construction Projects Manual.

(c) Channel Excavation (Unclassified).

This item shall consist of the removal and satisfactory disposal of all material, regardless of its nature and the manner in which it may be removed, that is excavated for channel changes in widening, deepening, and straightening existing channels or constructing new ones, which have a width at the bottom of more than 14 ft. (4 m) as indicated on the Plans. All other similar excavation with a bottom width 14 ft. (4 m) or less, as shown on the Plans, shall be paid for as Road and Drainage Excavation (Unclassified).). Any channel excavation that includes an existing stream or a proposed stream relocation must be constructed as specified in the applicable environmental permits.

(d) Undercutting.

This item shall consist of removing and disposing of unsatisfactory materials below grade in cut sections, from areas upon which embankments are to be placed, and may also include material excavated below the Foundation elevation for pipe, box culverts and box bridges as described in **Subsection 204.12**. Undercutting does not include the stripping, stockpiling and placing of topsoil, described in **Subsection 203.06**, nor does it include step-benching in the preparation of embankment areas on hillsides. Disposal of undercutting material off rights-of-way shall be conducted in accordance with the Procedures for Providing Offsite Waste and Borrow on TDOT Construction Projects Manual.

Subsection 203.04 General. Replace the entire subsection with the following:

203.04-General. Prior to beginning excavation, grading, and embankment operations in any area, all necessary Clearing and Grubbing, Removal of Structures and Obstructions and placement of Erosion Control Devices in that area shall have been performed in accordance with **Section 201, Section 202** and **Section 209**, respectively, of these Specifications.

Excavation materials shall be removed in such a manner that the slopes may be neatly trimmed to the lines given. The Engineer may change the slopes shown on the original cross sections, depress raised medians or islands, raise depressed medians or islands or daylight cuts to increase or decrease the quantity of Road and Drainage Excavation (Unclassified) provided the material can be excavated without blasting and these changes are set in the slope stakes prior to commencement of excavation of the affected slopes, medians or islands. Any additional material

thus obtained shall be paid for at the contract unit price bid for Road and Drainage Excavation (Unclassified).

Excavation required to correct slides, regardless of its location relative to the theoretical slope line, or excavation required to prevent potential slides including blasting, and the dressing, reshaping or flattening of the affected slopes as directed by the Engineer, shall be paid for under the Item for Road and Drainage Excavation (Additional Material) in accordance with **Subsection 203.10**. If it becomes necessary to flatten a slope to correct a slide or prevent a potential slide after the cut has been started but not completed, payment under Road and Drainage Excavation (Additional Material) will be limited to material removed between the original staked slope line and the newly established slope line above the elevation to which the cut has been made. All other material will be paid for at the contract unit price of Road and Drainage Excavation (Unclassified). Seeding, sod and other incidental items required to repair the slide area will be paid for at the contract unit price bid for the respective items.

If more material is required to complete the embankments after all cuts have been brought to grade and all Road and Drainage Excavation (Unclassified) has been removed from within the balance, additional materials shall be obtained from within the rights-of-way by flattening, widening or daylighting cut slopes, and by depressing raised medians or islands at locations designated and as directed by the Engineer provided:

(a) The cost of this material is more economical than borrow excavation.

(b) The material is available within the adjusted balance where the shortage exists or the material may be hauled outside the limits of adjusted balance if the cost of the material is more economical than borrow when the additional cost of overhaul is considered.

(c) The material can be excavated without blasting.

(d) There is a minimum of 20 ft. (6 m) between the top of the existing slope and the top of the new slope and minimum of 5 ft. (1.5 m) between the top of the new slope and Rights-of-Way Line or Control Access fence. The 20 ft. (6 m) minimum will not apply when the existing slope is 4:1 or flatter or to overlapping or near overlapping slopes in medians or between parallel roads or ramps. The 20 ft. (6 m) minimum may be reduced at the written request of the Contractor.

This additional material is to be paid for under the item for Road and Drainage Excavation (Additional Material) in accordance with **Subsection 203.10**.

When additional material is paid for under the item for Road and Drainage Excavation(Additional Material) and additional clearing and grubbing is required, the additional clearing and grubbing will be measured and paid for by the acre (hectare), provided the item for Adjusted Clearing and Grubbing is in the Contract, or as negotiated. No additional payment will be made for extra handling of stockpiled topsoil made necessary by the use of the item for Road and Drainage Excavation (Additional Material).

The roadbed through rock cuts shall be constructed to the grading line shown on the Plans, with an allowable working tolerance of plus 1 to minus 3 in. (plus 25 to minus 75 mm). The portions of the roadway that are less than 3 in. (75 mm) below grade shall be brought to grade with spalls or other suitable granular material that is available from the excavation within the

balance. If such excavation is not available, the Engineer may direct the Contractor to use approved base material for capping. Payment for furnishing and placing said base material will be made at the contract unit price bid per ton (metric ton) for the applicable Item in **Subsection 303.14**. When base material is not a bid item in the Contract, the material shall be furnished under the provisions of **Subsection 104.03**. If the roadbed is excavated in excess of 3 in. (75 mm) below the grading line shown on the Plans, the Contractor will be required to furnish and place at his own expense sufficient amounts of spalls or base material to bring the roadbed to a line 3 in. (75 mm) below the grading line.

Where sodding is indicated on the Plans to be placed on rock cuts, the rock shall be removed to 1 ft. (30 cm) below the grading line and backfilled to grade with earthen material prior to placing the sod. Measurement and payment of this work will be made under Items for Roadway and Drainage Excavation (Unclassified) and Sodding (New Sod).

All suitable materials removed from the excavation areas shall be used in the construction of embankments, intersecting road approaches, and in such other places as directed. Embankment construction shall be performed in accordance with the provisions of **Section 205** of these Specifications.

When boulder formations occur, the roadbed in the excavation area shall be scarified and all boulders removed to a depth of 12 in. (30 cm) below grade. The cavities thus formed shall be backfilled with suitable material and compacted.

All rock cuts shall be presplit at the outside limits of the cut areas. Presplitting shall consist of forming a plane of split rock prior to any primary blasting. The plane shall be formed for the entire depth of the cut or to a predetermined bench level. Presplitting shall be accomplished by drilling holes of appropriate size to the desired depth along the outside limits of the cut area, loading such holes with appropriate charges of explosives, stemming with minus 3/8 in. (9.5 mm) clean stone chips to the collar of the holes and detonating simultaneously. The initial horizontal spacing of holes and vertical spacing of charges and blasting cord for simultaneous detonation shall be as recommended by a reliable powder company. Adjustments of horizontal hole spacing and vertical spacing of charges shall be made as necessary to obtain a relatively smooth shear plane. Sand, gravel, clay, or dirt will not be permitted for stemming. In drilling holes for presplitting, the drills shall be plumbed for vertical slopes or set on the required slope when other than vertical slopes are specified, and all holes shall be drilled in the same plane. Presplitting will not be required on slopes flatter than 1 to 1. After presplitting is done, the drilling of primary blast holes shall be kept at least 3 ft. (1 m) or more from the presplit face. Presplitting of rock cuts under bridge sites shall be in accordance with the provisions of this Subsection and hole spacing shall be as specified under **Subsection 204.08**. Blasting records shall be made available on request by the Engineer. Blasting shall not be permitted within 300 ft. (100 m) of any Structure or concrete until at least 72 hours have elapsed after placement of the concrete. The Contractor will be responsible and replace and/or repair any and all damages at no expense to the Department.

All loose rock on cut slopes shall be removed immediately. Excavation material shall not be wasted, deposited or disposed of outside the construction lines unless directed by the Engineer. All excavation material wasted, deposited or disposed of outside the construction lines must be in accordance with the Procedures for Providing Offsite Waste and Borrow on TDOT Construction Projects Manual. Obliteration of old roadways shall include all grading operations necessary to incorporate the old roadway into the new roadway and surroundings in order to provide a pleasing appearance from the new roadway.

Removal of concrete pavement, base, parking strip, sidewalk, curb and gutter, etc. will be paid for under the classifications as prescribed in **Subsections 202.06 and 203.02(a).** Roadway obliteration will be paid for as Road and Drainage Excavation (Unclassified).

When the Contractor's excavating operations encounter remains of prehistoric people's dwelling sites or artifacts of historical or archaeological significance, the operations shall be temporarily discontinued. The Engineer will contact archaeological authorities to determine the disposition thereof.

The Engineer shall designate as unsuitable those soils that cannot be properly compacted in embankments. All unsuitable soil shall be disposed of as directed at no additional cost.

When the location of unstable soil is shown on the Plans, its removal and replacement shall be as shown.

The Contractor shall notify the Engineer sufficiently in advance of opening any borrow area so that, after stripping, cross section elevations and measurements of the ground surface may be taken, and so that the borrow material can be tested before being used. The borrow area shall be approved in accordance with the Procedures for Providing Offsite Waste and Borrow on TDOT Construction Projects Manual. At least 14 days' time shall be allowed for testing borrow materials or other material from roadside pits that is proposed for construction purposes.

Unless otherwise permitted, borrow material shall not be placed until after the roadway excavation has been placed in the embankments. If the Contractor places more borrow than is required and thereby causes a waste of excavation, the amount of such waste will be deducted from the borrow volume as measured in the borrow area. The Contractor shall not excavate beyond the dimensions and elevations established.

When the Contractor elects to remove highway fencing to obtain borrow materials, the fencing shall be replaced with new fence at the Contractor's expense. The Contractor shall be responsible for the confinement of livestock when a portion of the fence is removed.

Borrow pits shall be approved in accordance with the Procedures for Providing Offsite Waste and Borrow on TDOT Construction Projects Manual and excavated in such a manner that they will be self-draining where possible and practicable, and shall be of a shape that can be easily cross sectioned.

When the Contractor's excavation operations are completed the area shall have a neat appearance. All borrow areas, except those portions which are under water in the case of pits which are not self-draining, shall be covered with topsoil and stabilized in accordance with the Procedures for Providing Offsite Waste and Borrow on TDOT Construction Projects Manual.

Furnishing and placing of topsoil and seeding (with mulch) shall be performed in accordance with the provisions of **Subsection 203.06** and **Section 801**, respectively.

Furnishing and placing topsoil and stabilization of borrow areas, as specified above, shall be included in the bid cost for the project as specified in the Procedures for Providing Offsite Waste and Borrow on TDOT Construction Projects Manual.

The Contractor's attention is called to **Sections 53-801 through 53-809** of the **Tennessee Code, Annotated**, the provisions of which apply to borrow pits 1 acre (4047 m^2) or more in size that are not self-draining. Full information regarding the requirements to be complied with and the necessary permits which the property owner must secure for the construction of a pond, lake, borrow pits, etc., one acre or larger which is not constructed to drain, will be supplied upon application to the Tennessee Department of Environment and Conservation.

All existing roads within the right-of-way and not in the graded area that are to be abandoned shall be scarified, obliterated, top-soiled, and seeded. Scarifying and obliterating the pavement

will not be measured and paid for directly, but the cost will be included in the cost of other items. Topsoil will be measured and paid as outlined in **Section 203.09** and **203.10.** Seeding, in accordance with **Section 801** of these Specifications, will be measured and paid for under the item for Seeding.

When additional material is paid for under the item for Road and Drainage Excavation(Additional Material) and additional clearing and grubbing is required, the additional clearing and grubbing will be measured and paid for by the acre (hectare), provided the item for Adjusted Clearing and Grubbing is in the Contract, or as negotiated. No additional payment will be made for extra handling of stockpiled topsoil made necessary by the use of the item for Road and Drainage Excavation (Additional Material).

Subsection 203.05-Undercutting. Add the following as the last sentence of the first paragraph:

If undercutting material is to be disposed of off rights-of-way, disposal shall be conducted in accordance with the Procedures for Providing Offsite Waste and Borrow on TDOT Construction Projects Manual, and the site to be used for disposal must be approved in advance by the Project Supervisor, Environmental Coordinator, and the Environmental Division.

Subsection 203.06-Stripping, Stockpiling and Placing Topsoil. Revise the first paragraph to the following:

203.06-Stripping, Stockpiling and Placing Topsoil. The Engineer will designate areas between slope stake points in both cut and fill from which the existing topsoil shall be stripped and stockpiled. The quantity of topsoil to be stripped shall be sufficient to provide, over all areas to be seeded, a depth of 2 to 3 in. (50 to 75 mm) of the material. If the quantity of topsoil available in such areas is insufficient, the Contractor shall make up the deficiency with topsoil from an approved borrow area in accordance with the Procedures for Providing Offsite Waste and Borrow on TDOT Construction Projects Manual. The quantity of topsoil from such a source shall be measured by cross sectioning the area before and after removal.

Subsection 203.07-Disposal of Excess or Unsuitable Material. Revise the entire subsection to the following:

203.07-Disposal of Excess or Unsuitable Material. Excess excavation material shall be used to raise, widen or flatten the slopes of embankments; to fade embankments into cuts; or be placed in such other locations and for such purposes as the Engineer may direct.

Specific instructions will be given by the Engineer regarding the disposal of surplus material. Excess or unsuitable material placed within the rights-of-way limits shall be placed and compacted in accordance with **Subsection 205.04**. Foundation preparation for and drainage through these waste areas shall be equivalent to that provided for the adjacent roadway embankment.

If no suitable place can be found to dispose of excess or unsuitable material within the limits of the rights-of-way, the Engineer may direct the Contractor to provide a suitable site off the rights-of-way at no additional cost in accordance with the Procedures for Providing Offsite Waste and Borrow on TDOT Construction Projects Manual.

Furnishing and placing topsoil and seeding waste areas inside the Rights-of-Way shall be measured and paid for at the contract unit prices bid for the respective items. Furnishing and

placing topsoil and seeding on waste areas outside the Rights-of-Way in accordance with the above provisions will not be paid for directly, and the costs thereof shall be included in the unit price bid for other items of construction.

When waste material is placed off the rights-of-way which, in the judgment of the Engineer, are so removed from the rights-of-way as to not constitute a potential threat to the stability of the project, the contractor should follow the requirements outlined in the Procedures for Providing Offsite Waste and Borrow on TDOT Construction Projects Manual to ensure the waste area is properly designed, regulated, and implemented.

Subsection 203.09-Method of Measurement. Delete the next to the last paragraph which begins with, "Overhaul of Road and Drainage Excavation".

Subsection 203.10-Basis of Payment. Delete the last paragraph.

Subsection 204.02-Classification (g) Bedding Material for Support for Pipe Culverts. **Add** the following sentence to (g):

"Payment for Type "A" or Type "B" backfill including bedding material will be included in the unit price of the pipe unless otherwise specified in the plans."

Subsection 204.06 Add the following before section (a)

> "The contractor shall submit for approval a proposed mix design in accordance with **Subsection 604.03."**

Subsection 204.06 (a), second paragraph, **Delete** the first sentence and replace with the following:

"The above Specification Limits may be adjusted by the Engineer to obtain the consistency required for satisfactory flow."

Subsection 204.08-Excavation (a) and (c). Replace Subsection (a) and (c) with the following:

(a) Bridges, Box Culverts and Other Major Structures.

Before excavation is started the Engineer or Contractor when required, will set stakes locating and outlining the structure and cross section for excavation computations. The Contractor will also use highly visible markers to mark disturbed area and undisturbed area limits. Highly visible markers must be readily visible to project personnel including equipment operators. No excavation shall be started prior to that time.

All structure excavation shall be cut to the lines and elevations indicated on the Plans, or as directed by the Engineer. Working variations outside the neat lines will be permitted; however, only that excavation outlined under **Subsection 204.12** will be measured for payment.

No excavated materials shall be deposited or disposed of outside the construction lines unless directed and approved by the Engineer in accordance with the Procedures for Providing Offsite Waste and Borrow on TDOT Construction Projects Manual.

When solid rock is encountered in roadway cut sections and channel sections under bridges, presplitting operations shall be performed in accordance with the provisions of **Subsection 203.04**. Hole spacing along bridge abutment sites shall not exceed 12 in. (30 cm). Where overshooting of rock, beyond the cut sections shown on the bridge plans

cause modification of bridge abutments or span lengths, such modifications shall be made at the contractor's expense.

Inclined surfaces of rock used as foundation shall be excavated either level or in steps. When necessary, as determined by the Engineer, to obtain good bond, the surface of rock foundation shall be roughened, or suitable anchors installed. Over-excavations that require re-design, or increased bridge length and/or quantities, or supplemental retaining walls or other earth retaining structures shall be paid at the expense of the Contractor.

Existing concrete foundations, boulders, or ledge streaks of rock projecting into the bottom of the excavation shall be removed to a depth of 6 in. (15 cm) below foundation elevation, and the space backfilled with approved material and thoroughly compacted.

Excavation below bridge foundation elevations as given shall be done only upon direction of the Engineer. All materials moved without such authority shall be replaced by the Contractor without compensation by constructing a sub-footing of the same materials as the footing of the structure unit and 6 in. (15 cm) wider on every side.

(c) Utilization of Excavated Materials.

All suitable excavated material shall be utilized as backfill or embankment. Excess or unsuitable material shall be disposed of in such a manner as not to obstruct the stream or otherwise impair the efficiency or appearance of the structure. No excavated material shall be deposited at any time in such a manner as to endanger a partly finished structure.

The Contractor shall handle and deposit excavated materials in such a manner as to furnish proper protection to materials which will be incorporated in the structure.

In streams, the disposal of material will be subject to the laws of the U.S. Government and requirements set out in the TN Construction General Permit and any other applicable environmental permits.

Subsection 204.09-Protection of Excavation. Replace the entire subsection with the following:

204.09-Protection of Excavation. The Contractor will be held responsible for protecting his excavation and shall take every precaution to maintain the excavation intact.

Cofferdams or cribs, used in the preparation and protection of the foundation, in general, shall be carried well below the bottom of the footings, shall be substantially braced in all directions; and shall be of such construction as will permit them to be pumped and maintained free of water until the construction therein has been completed. All dewatering of work areas of must comply with the requirements of the TN Construction General Permit and shall not cause a water quality violation. Unless otherwise specifically indicated on the Plans, the interior dimensions of the cofferdam will be such as to give sufficient clearance to provide for the construction and inspection of forms; and to provide for the handling and pumping of leakage outside of the footing area. Cofferdams or cribs which tilt or move out of position during the process of sinking shall be righted or enlarged in order to provide the necessary clearance.

Cofferdams or cribs shall be so constructed as to protect the foundation and the construction therein against damage from a rise in the stream.

Timber, or bracing of a cofferdam or crib may extend into or through the substructure only with the written permission of the Engineer, obtained before the construction of the cofferdam or

crib has been started. In addition, the cofferdams for structure widening shall not be braced off of the existing structure.

The Contractor shall submit drawings, prepared by and stamped by a Professional Engineer licensed in Tennessee, showing details of his proposed cofferdam, or crib construction to the Engineer, prior to starting any work. The type and clearance of cofferdams, or cribs, insofar as they affect the finished structure or part thereof, will be subject to the approval of the Engineer but the design and successful construction shall be the responsibility of the Contractor. Work in a stream shall not begin until applicable permits from state and federal agencies have been obtained. Coffer dam construction shall be in accordance with the requirements of the permit(s).

Cofferdams or cribs, with all falsework, sheeting, bracing, etc. shall be removed by the Contractor after the completion of the sub-structure therein, unless otherwise directed. The removal shall be affected in such a manner as not to disturb nor mar the completed work.

If the foundation excavation has become disturbed or distorted, it shall be cleaned out and restored to satisfactory condition at the Contractor's expense.

Subsection 204.10-Foundation Preparation. Replace the entire subsection with the following:

204.10-Foundation Preparation.

(a) Bridges, Box Culverts, and Other Major Structures.

The preparation of foundations for bridges, box culverts and other major structures, in addition to the stipulations set out in **Subsections 204.08** and **204.09**, shall be in accordance with the following:

When the foundation has been completed to foundation elevation as given, the Engineer shall be notified and the construction therein withheld pending his inspection and approval of the foundation.

When directed by the Engineer, unless piles are indicated, the Contractor shall test each foundation in the presence of the Engineer, by sinking not less than 3 holes, or more than 6 holes to a depth of between 6 and 10 ft. (1.8 and 3 m) in order to verify the apparent conditions of the foundations.

Should these test holes disclose unsatisfactory foundation conditions, the excavation shall be carried lower, as directed by the Engineer, and new tests made, until a satisfactory foundation is secured. The costs incurred in sinking test holes will not be paid for directly but shall be included in the price bid for other items of construction unless specified otherwise on the Contract drawings.

When rock is encountered in the excavation for the foundation, it shall be cleared off and the Engineer notified. Test holes shall then be drilled in the rock as shown on the Plans or directed by the Engineer to determine the lines of demarcation, the classification and the stability of the rock. The excavation shall then be continued to the elevation designated by the Engineer and test holes, if required by the Engineer, shall again be drilled and excavation continued until a foundation approved by the Engineer is secured.

Rock used as foundation shall be stripped and cleaned of all overlying materials. All loose, disintegrated, or light slabby portions of the rock shall be removed.

In rock foundations, when the rock is shattered below the foundation elevation, the shattered material shall be removed and the space so created rebuilt with the same type of

construction as the proposed overlying construction. The additional quantities thus made necessary shall not be included in the pay quantities for this item.

When the Plans indicate that piles shall be driven, or if after the foundation excavation has been completed it becomes necessary to reinforce the foundation by driving piles therein, any bulge of the foundation material, caused by the driving of the piles, shall be removed at the Contractor's expense, to the elevation indicated or directed and the foundation trued to an even surface over its entire area.

Unsatisfactory material in the foundation shall be removed and replaced with satisfactory material designated by the Engineer. This material shall be placed in layers not exceeding 6 in. (15 cm) in loose depth and compacted to 100 % of maximum density up to the foundation elevation.

Any pumping that may be permitted from the interior of any foundation enclosure shall be done in such a manner as to preclude the possibility of any portion of concrete material being carried away. Any pumping required during the placing of concrete, or for a period of at least 24 hours thereafter, shall be done from a suitable sump located outside the concrete forms. All dewatering of work areas must comply with the requirements of the TN Construction General Permit and shall not cause a water quality violation.

When conditions are encountered which render it impracticable to dewater the foundation before placing the footing, the Engineer may permit the construction of a concrete foundation seal of such dimensions as he may consider necessary and of such thickness as to resist any possible uplift. Before pouring the seal, the foundation shall be cleaned of all objectionable material by the use of sand pumps, spud bars or other means which will accomplish the purpose satisfactorily. The seals shall then be constructed in accordance with the provisions of **Subsection 604.19.** Pumping to dewater a sealed cofferdam shall not commence until the seal has set sufficiently to withstand the hydrostatic pressure. The foundation shall then be dewatered and the seal thoroughly cleaned of all laitance and generally prepared for further construction.

Measurement and payment for concrete foundation seal will be as provided for under **Subsections 604.31** and **604.32** except as provided for in 204.13.

(b) Pipe Culverts.

Bedding for pipe culverts shall conform to the requirements given below for Class A, B, or C bedding, whichever is shown on the Plans or in the special provisions. If the class of bedding is not shown, Class C bedding shall be placed.

Class A bedding for pipe culverts shall consist of a continuous concrete cradle constructed in conformity with the details shown on the Plans and the applicable requirements of **Section 604** (Concrete Structures).

Class B bedding shall be constructed by bedding the culvert pipe in a trench cut in natural ground or compacted embankment to a depth as shown on the Plans. The pipe shall be bedded on a 6 in. (15 cm) thickness of Class B Material and sufficient additional Class B material accurately shaped by a template to fit the lower part of the pipe exterior for at least 10% of its overall height. Class B material shall then be rammed and tamped in layers not over 6 in. (15 cm) in loose thickness around the pipe to a minimum depth of that shown on the Plans. The remaining depth of trench shall then be backfilled and compacted as outlined in **Subsection 204.11(b)**. When bell and spigot pipe is to be placed, recesses shall be dug in the bedding material of sufficient width and depth to

accommodate the bell without its resting on the bottom of the recess. The width of the recess shall not exceed the width of the bell by more than 2 in. (50 mm).

When plastic pipe is to be placed, the bedding and backfill shall be granular compactable Type "A" or Type "B" Aggregate, Grading D or E material meeting the requirements of **Subsection 903.05**. Open graded aggregates will not be allowed. A minimum of 6 inches of bedding compacted to a minimum 90% Standard Proctor Density shall be provided prior to placement of the pipe unless otherwise specified.

Class C bedding shall be constructed by bedding the culvert pipe in a shallow trench cut in natural ground or compacted embankment to a depth of not less than 10% of the outside vertical pipe diameter, and shall be shaped to fit the lower pipe exterior for the specified embedment. When bell and spigot pipe is to be placed, recesses shall be dug in the earth foundation of sufficient width and depth to accommodate the bell without its resting on the bottom of the recess. The width of the recess shall not exceed the width of the bell by more than 2 in. (50 mm).

When flowable fill is required by the plans, class B bedding shall be constructed by bedding the culvert pipe in a trench cut in natural ground or compacted embankment to a depth as shown on the Plans. The pipe shall be bedded on a 6 in.(15 cm) thickness of Class B Material and sufficient additional Class B material accurately shaped by a template to fit the lower part of the pipe exterior for at least 10 % of its overall height. Flowable fill shall then be placed around the pipe as specified in **Subsection 204.11(c).**

Subsection 204.11 Backfilling, (b) Pipe culverts. **Add** The following as the third paragraph:

"When plastic pipe is to be placed, structural backfill must be worked into the haunch area and compacted by hand after placement of the pipe. Special compaction means may be necessary in the haunch area. Structural backfill may then be placed in layers not to exceed an 6 inch loose lift thickness and brought up evenly and simultaneously on both sides of the pipe to an elevation not less than one foot above the pipe. A minimum compaction level of 90% Standard Proctor Density per *AASHTO T99* shall be achieved by the use of a vibratory plate. Hydrohammer type compactors shall not be used over the pipe. All compaction equipment used shall be approved by the Engineer."

204.12-Method of Measurement. Add the following as the last paragraph:

"Payment for Type "A" or Type "B" backfill including bedding material will be included in the unit price of the pipe."

204.13-Basis of Payment, (h) Concrete for Class A Bedding. **Remove** paragraph and **replace** with the following:

"Payment for Type "A" bedding material will be included in the unit price of the pipe unless otherwise provided in the plans. If specified by the plans, concrete for Class A Bedding will be paid for at the contract unit price per cubic yard (m3) for Bedding Material (Pipe) Class A, complete in place."

204.13-Basis of Payment, (i) Material for Class B Bedding. **Remove** paragraph and **replace** with the following:

"Payment for Type "B" bedding material will be included in the unit price of the pipe unless otherwise provided in the plans." If specified by the plans, material for Class B Bedding will be

paid for at the contract unit price per cubic yard (cubic meter) for Bedding Material (Pipe) Class B, complete in place.

204.13-Basis of Payment, (l) Backfill Material (Flowable Fill). **Add** the following as the last paragraph:

"Payment for "Flowable Fill" as backfill material for pipe shall be included in the unit price of the pipe unless otherwise provided in the plans."

Subsection 205.01 Description. Revise the entire subsection to the following:

205.01-Description. This work shall consist of constructing roadway embankments, including preparation of the area upon which they are to be placed; the construction of dikes within or outside the rights-of-way; the placing and compacting of approved material within roadway areas where unsuitable material has been removed; and the placing and compacting of embankment material in holes, pits, and other depressions within the roadway area all in accordance with these Specifications and in reasonably close conformity with the lines, grades, and typical cross sections shown on the Plans or established by the Engineer. Only approved materials shall be used in the construction of embankments and backfills. These materials shall consist of Road and Drainage Excavation, Channel Excavation, and Borrow Excavation material described in **Section 203**, or excess material as described in **Section 204**.

The Contractor must identify both natural and created steep slope areas as defined in the TN Construction General Permit. These slopes must be marked in the SWPPP. Maintenance and stabilization of steep slopes must comply with the TN Construction General Permit and any other applicable environmental permits.

Subsection 205.04 Insert the following, between the fifth and sixth paragraph:

"Where the contract includes the placement of base stone or other components of a pavement structure upon the subgrade, the top 6 in. (150 mm) in both cut and fill sections shall be compacted to a density equal to 100 percent of the maximum density in accordance with the provisions of **Subsection 207.04.**"

Subsectin 206.03-Method and Scope of Work. Revise the entire subsection to the following:

206.03-Method and Scope of Work. Final Dressing shall be performed by hand work and machines to produce a uniform satisfactory finish to all parts of the roadway and other components of the project. The roadbed, shoulders, ditches and slopes shall be shaped within reasonably close conformity to the specified lines, grades and cross sections. Spoil banks, borrow areas, waste areas, etc. shall be dressed in a satisfactory manner in accordance with the Procedures for Providing Offsite Waste and Borrow on TDOT Construction Projects Manual. Rock cuts shall be scaled of all loose fragments and left in a neat, safe and workmanlike condition.

The entire rights-of-way shall be cleaned of all weeds, briars and brushes unless otherwise specified on the Plans. All structures, both old and new, shall be cleared and cleaned of all brush, drifts, heavy vegetation, sediment, rubbish, obstructions and other objectionable material.

Final dressing shall be performed prior to sodding and seeding operations when these construction items are included in the Contract.

Tracked machines used in the dressing of slopes shall be run up and down slopes as opposed to longitudinally.

Section 209, Revise Section title to the following:

SECTION 209-PROJECT EROSION PEVENTION AND SEDIMENT CONTROL

Subsection 209.01, Revise entire Subsection to the following:

209.01-Description. This work shall consist of temporary and permanent best management practices to prevent erosion and control sediment through the use of structural and non-structural controls.

Erosion prevention and sediment control (EPSC) measures shall be implemented during all phases of construction, including all approved waste and borrow areas. EPSC measures shown on the Stormwater Pollution Prevention Plan (SWPPP) must be in place before any soil disturbing activities begin.

The Contractor must identify both natural and created steep slope areas as defined in the TN Construction General Permit. These slopes must be marked in the SWPPP. Management and stabilization of steep slopes must comply with the TN Construction General Permit and any other applicable environmental permits.

In addition to installing the EPSC measures included in the SWPPP, the Contractor is responsible for compliance with all other provisions of the SWPPP. Additional EPSC measures beyond those shown in the SWPPP may be required to maintain compliance with permits

Subsection 209.02, Revise Subsection to the following:

209.02-Classification. Structural and Non-Structural best management practices will be classified in accordance with manual for Management of Storm Water Discharges Associated with Construction Activities. Best management practices are structural and non-structural controls required for the project and shall be implemented in accordance with the TN Construction General Permit, Manual for Management of Storm Water Discharges Associated with Construction Activities, the project Stormwater Pollution Prevention Plan, and Roadway Standard Drawings, whichever is more restrictive.

Subsection 209.04, Revise entire Subsection to the following:

209.04-Project Review. Prior to the preconstruction conference the Contractor shall meet with the Engineer to discuss potential problems with erosion prevention and sediment control due to construction activities and actions to be taken to prevent such problems. Should the Contractor's operations and construction staging differ significantly from the SWPPP prepared for the project, the Contractor shall prepare a comprehensive SWPPP in accordance with **Subsection 209.05** below that does not conflict with the requirements of the TN Construction General Permit, the conditions of any ARAP for the project, or other environmental permits. The SWPPP shall be continuously implemented to effectively control erosion and protect streams, wetlands, and adjoining properties during the term of the contract.

If it is determined that a waste or borrow area is needed, the Contractor shall prepare a waste and borrow plan in accordance with the Procedures for Providing Offsite Waste and Borrow on TDOT Construction Projects Manual.

Subsection 209.05, Revise entire Subsection to the following:

209.05-Preconstruction Conferences. Each project will have a preconstruction conference. In addition to the preconstruction conference, for sites that have environmental permits, an environmental preconstruction conference will be held. These conferences can be held jointly or separately, as determined by the Project Supervisor.

At the preconstruction conference the Contractor shall submit for acceptance his plan for the staging of his operations. If the staging plan requires additional erosion prevention and sediment control measures or causes the existing SWPPP for the project to be modified, the Contractor shall submit these modifications to the project Supervisor and discuss the modificaitons during the preconstruction conference. The staging plan must address: (1) All areas within the rights-of-way as are applicable for clearing and grubbing, grading, bridges and other structures at water courses, paving and incidental construction (2) Areas outside the rights-of-way that will be disturbed by the construction such as waste and borrow areas (which must have an approved waste and borrow plan and be properly permitted), haul roads, utilities, and staging areas, and utility work in general. The Contractor's modified SWPPP shall incorporate and supplement, as applicable, the basic control devices shown in the plans to provide acceptable temporary and permanent erosion prevention and sediment controls during all stages of construction as well as to comply with all applicable environmental permit conditions. The Contractor’s modified SWPPP shall include controls for managing and stabilizing natural and created steep slope areas as defined in the TN Construction General Permit. No work shall be started until the erosion prevention and sediment control plan, including the staging of temporary and permanent erosion control measures, has been accepted by the Engineer. Rejection of all or part of the plan shall not constitute a basis for an extension of contract time.

The Project Supervisor and Contractor will discuss how utilities are to be managed on the project, specifically if the utilities are within the Construction contract or are separate from the Construction contract. The Prime Contractor will coordinate a start date for utilities with the Project Supervisor if utility work will begin before the project start date. Unless approved in advance by the Project Supervisor, utilities that are within the Construction contract cannot begin construction on the project until the Project Supervisor has approved the work.

The erosion prevention and sediment control plan shall be updated as work progresses to show changes due to revisions in work schedules or sequence of construction, or when directed by the Engineer. Additional measures shall be installed in the field as needed to manage erosion and sediment and to prevent pollutants from discharging into waters of the state or off the project.

An environmental preconstruction conference will also be held prior to beginning construction on sites that have environmental permits. The environmental preconstruction conference will include a review of the project’s environmental permits and any additional environmental commitments required for the project. This meeting will discuss the required marking of clearing limits and the marking of sensitive environmental areas per any applicable environmental permits. The Contractor will discuss potential problems with implementing the requirements of any environmental permits due to construction activities. The Contractor shall also discuss actions to be taken to prevent conflicts between environmental permits and construction activities.

Subsection 209.06, Revise entire Subsection to the following:

209.06-Construction Requirements. Disturbed area limits and environmental boundaries shall be marked in the field prior to construction in each section or portion of the project. Prior to or simultaneously with the clearing and grubbing operations, the Contractor shall install erosion prevention and sediment control devices in accordance with the approved SWPPP. Such work may involve the construction of temporary berms, dams, silt fences, sediment basins, lined channels, permanent cut-off ditches, slope drains or other control devices as necessary to prevent and control erosion. Water from cofferdams or other dewatering activities is not to be pumped directly into streams, but is to be pumped into sediment basins, traps, or filter bags or otherwise adequately treated prior to discharging. No grading shall be performed until the erosion prevention and sediment control devices are in place to the satisfaction of the Engineer. Areas to be graded may be cleared and grubbed prior to beginning grading operations in accordance with the TN Construction General Permit, provided adequate controls are in place. Stockpiled topsoil or fill material is to be protected so the sediment runoff will not contaminate surrounding areas or enter nearby streams. In order to reduce sediment in runoff, erosion prevention and sediment control structures shall be installed promptly during all construction phases and maintained until the areas they are serving have been permanently stabilized.

The Contractor must identify both natural and created steep slope areas as defined in the TN Construction General Permit. These slopes must be marked in the SWPPP. Management and stabilization of steep slopes must comply with the TN Construction General Permit and any other applicable environmental permits.

The Contractor's operations shall be staged so that graded or otherwise disturbed erodible surfaces are protected as the work progresses. Once the Contractor begins grading for a roadway cut or embankment, he shall maintain a continuous, viable operation to complete the cut or embankment to subgrade elevation, unless otherwise approved in writing by the Engineer. Exposed erodible cut or embankment slopes shall be final dressed, topsoiled and protected with permanent seeding, sodding, matting or other acceptable erosion prevention and sediment control measures in vertical increments not exceeding 25 ft. (7.5 m) as the work progresses; and no portion of these slopes shall remain unprotected longer than allowed by the TN Construction General Permit unless the Engineer determines that weather conditions or other special circumstances preclude current placement of permanent control measures. Temporary erosion control measures shall be implemented as directed by the Engineer.

Seeding, sodding, matting or other acceptable erosion prevention and sediment control operations shall be initiated within 48 hours after any one of the following conditions occurs:

1. Each 25 ft. (7.5 m) vertical increment is graded or
2. Upon suspension or completion of grading operations in a specific area.

The above requirements for progressive erosion prevention and sediment control, as well as additional requirements, also apply to graded areas off the rights-of-way such as waste areas, borrow areas and haul roads. A borrow and waste site plan must be developed for any waste or borrow area selected according to Statewide Storm Water Management Plan – Procedures for Providing Offsite Waste and Borrow on TDOT Construction Projects.

The Contractor shall incorporate all permanent erosion prevention and sediment control practices into the project at the earliest practicable time and in accordance with the TN Construction General Permit requirements. Temporary erosion prevention and sediment control features shall be used to control erosive conditions that warrant protection prior to installation of

permanent control features or that are needed to temporarily control erosion that develops during construction but which is not associated with permanent control features on the project. Temporary stabilization of disturbed areas shall be in accordance with the requirements of the TN Construction General Permit.

Where construction activities cross or border areas of depression (i.e. Sinkholes without openings or open throats), erosion prevention and sediment control measures shall be installed and maintained as shown in the plans and as required by the TN Construction General Permit and any other applicable environmental permits.. When construction activities encounter an open throated sinkhole (Class V Injection Well), the Engineer shall be notified immediately and applicable measures as described in the approved SWPPP shall be employed. The measures mentioned above shall encircle the sinkhole opening so as not to allow any silt or other potential pollutants to enter the opening.

In the event of conflict between these requirements and TN Construction General Permit, rules or regulations of other Federal or State or local agencies, the more restrictive laws, rules or regulations shall apply.

Subsection 209.07-Construction of Structures. Revise entire subsection to the following:

209.07-Construction of Structures Structural controls include, but are not limited to, bonded fiber matrix, riprap, inlet protection, check dams, silt fence, and sediment basins. Structural measures shall be installed and maintained in accordance with the Manual for Management of Storm Water Discharges Associated with Construction Activities, TN Construction General Permit, and the Roadway Standard Drawings.

Erosion prevention and sediment control measures shall be installed as indicated on the Roadway Standard Drawings, except as follows:

(a) **Sediment Filter Bags.**

The sediment bags may be utilized either on slope drains, pipe culverts, box bridges, or for pumping sediment from sediment traps and sediment basins. This activity shall be performed as shown on plans or as directed by the Engineer. The material shall be a non-woven geotextile fabric bag resistant to rot, mildew, puncture and tearing, with a minimum seam breaking strength of 200 lbs (90 kgs) the seams shall demonstrate less elongation and Deformation of the geotextile fabric. The Division of Materials and Test will certify the fabric for the Temporary Sediment Filter Bags and place them on the Department's Qualified Products List. Temporary Sediment Filter Bags shall meet the following specifications.

GEOTEXTILE FABRIC SPECIFICATIONS

Properties		Test Method
Weight	10.0 oz/yd	ASTM D 3776
Tensile Strength	250 lbs.	ASTM D 4632
Tensile Elongation at Break	50%	ASTM D 4632
Puncture Strength	115 lbs.	ASTM D 4833
Trapezoidal Tear	100 lbs.	ASTM D 4533
Mullen Burst	350 lbs.	ASTM D 3786

Water, Flow Rate	80 gpm/ft.2	ASTM D 4491
Permittivity	1.2 sec.-1	ASTM D 4491
UV Resistance	70% str. Ret.	ASTM D 4355

Standard Bag Minimum Dimensions
15 x 10 ft. and 15 x 15 ft.

Maximum Flow Rate
15 x 10 ft. up to 1,500 gpm
15 x 15 ft. up to 2,000 gpm

A manufacturer's label designating the maximum allowable flow rate of the bag in gallons per minute shall be permanently attached to each bag. The flow into the filter bag shall not exceed the designated flow rate. Care shall be taken to correctly connect the filter bag to the pump hose, as recommended by the manufacturer. Upon project completion, the sediment filter bag shall be completely removed and the disturbed areas at the dewatering structure location shall be permanently stabilized. The bag and sediment contained in the bag shall be disposed as directed by the Engineer.

(b) Sandbag Berms and Temporary Plugs.

Sandbag berms and temporary plugs may be used for velocity control, runoff management, sediment control and separating streamflow from work areas. These sandbag measures should not be used for filtration. Sandbag berms and temporary plugs should not be used in high concentrated flow areas where the sand bags may be displaced by flow. Sandbags should not be used in areas where equipment and/or traffic may damage the bags. The ends of sandbags must be tightly abutted and overlapped to direct flow away from bag joints.

Sandbags for the sandbag berms and channel plugs shall be made of durable, weather resistant geotextile fabric. Use of burlap is not acceptable for sandbags used in sandbag berms and temporary plugs. The bag fabric pores must be tight enough to retain the bag filler material. Typical bags measure approximately 24 inches x 12 inches x 6 inches. The sandbag fill material shall be a clean non-cohesive sand material.

Where sandbags are used to construct sandbag berms or temporary plugs across a ditch or channel, the sandbags should be installed along a level contour. The sandbags at the ends of the measure should be turned upstream.

Sandbag berms may be installed in both unpaved and paved ditches and channels. The sandbag berm must be wider than the high water mark of the ditch or channel to prevent undercutting. The center of the sandbag berm must be lower than either of the edges. For multiple sandbag berms installed in ditches, the maximum spacing between the berms should be such that the toe of the upstream sandbag berm at the same elevation as the top of the downstream sandbag berm.

Sandbag temporary plugs are constructed to separate stream flow from work areas, especially for projects requiring temporary diversions. Sandbag temporary plugs shall be constructed as required for the temporary diversion. The temporary plugs should be constructed as appropriate to be free of leaks between the bags.

Sandbags shall be removed and replaced if bags become torn or damaged to prevent the bag filler material from becoming a stormwater pollutant. Remove any sediment accumulations at sandbags when the sediment accumulation has reached half the original height of the sandbags. Where the ends of sandbag structures are breached, place new bags in the breach and extend the ends of the berm to a higher elevation. If needed, repair the bank damage. Where sandbags are undermined, do not repair the sandbags in place as additional undermining may occur. Move the sandbags downstream of the damaged location.

Upon project completion, all sandbags shall be removed and any disturbed areas underlying the sandbags shall be permanently stabilized with measures such as permanent seed and mulch.

(c) Flocculants .

This work shall consist of furnishing and applying flocculant materials for controlling erosion on disturbed areas and for use with sediment control devices for the purpose of reducing turbidity from stormwater runoff. Flocculant materials shall be manufactured and applied in strict accordance with the Specifications herein.

Equipment

All equipment necessary for the satisfactory performance of this work shall be on the project and approved, before work will be permitted to begin.

If using a liquid application system, it may be necessary to pump a surfactant through the delivery system prior to liquid flocculant injection and afterwards in order to prevent clogging of pipes and valves.

After application of flocculant materials, all equipment used for application shall be cleaned per the flocculant manufacturer's recommendations in order to prevent the formation of dried residues that may impede future equipment performance.

Applications of dry flocculant materials shall be performed with a hand-held fertilizer spreader or a tractor-mounted spreader. If approved by the flocculant manufacturer, the mixing of certain dry flocculants with dry silica sand will aid in the spreading of flocculant material.

Limitations

Cationic PAM blends will not be approved for use and shall not be applied in any circumstance due to aquatic toxicity.

Flocculants shall never be applied directly to streams, wetlands, or other natural water resources. Flocculants shall never be applied directly to sediment ponds. Flocculants applied to any area of the construction site, including slopes, shall be applied in such a manner so that all flocculant-applied runoff flows into a sediment trap, sediment pond, or series of multiple sediment-control BMPs prior to discharge from the site. Flocculants shall not be applied to slopes that produce runoff directly into a stream, wetland, or other natural water resource. Flocculants for both erosion and sediment control shall always be used in conjunction with approved stormwater BMPs, as given in the TDOT Standard Drawings.

Dry flocculant applications must be applied in dry weather conditions with light winds. Anionic PAM shall not be applied during rainfall or onto saturated soils.

All flocculant applications shall be applied at least 60 feet from any stream, wetland, or other natural water resource located on or adjacent to the construction site.

Emulsion forms of coagulant/flocculants should never be applied directly to stormwater runoff or to streams, wetlands, or other water resources due to surfactant toxicity. Emulsions may only be used in the preparation of liquid flocculants specifically used for erosion control applications, i.e., soil binders and tackifiers.

Preparation of Treatment Areas

Prior to use of flocculants, site-specific soil samples must be obtained and tested to identify the optimum flocculant blends to use for effectiveness. The Contractor shall provide site specific soils from given construction site to select an appropriate and effective flocculant blend for dry, liquid, emulsion, and brick/log flocculant materials. Soil samples must be obtained from each soil horizon to be accessed during excavation.

Application Requirements

Flocculants shall be used in conjunction with other BMPs (with the bulk of structural sediment-control BMPs, including sediment ponds, positioned down slope of the flocculant-application areas) to increase flocculant performance. Stormwater runoff from flocculant-treated soils shall be directed to pass through a series of sediment control BMPs prior to discharge to surface waters, with flow passing through, at least, a minimum of 3 enhanced rock check dams and a silt trap. It is preferable that runoff from flocculant-treated areas be directed into a sediment pond.

Flocculant materials shall be stored in covered areas. Many flocculants demonstrate a decrease in effectiveness after exposure to sunlight and air. Anionic PAM loses its effectiveness within three months after exposure to sunlight and air. Anionic PAM as well as certain other flocculant materials, when combined with water, become very slippery and can produce a safety hazard. Care must be taken to prevent spills of flocculants, in liquid, emulsion, or powder form, onto paved surfaces.

Application of flocculants will be most effective when applied as follows:

a) During rough grading operations;

b) On stockpiles and borrow areas;

c) Temporary haul roads before placement of crushed rock surface;

d) Compacted soil road base;

e) After final grading and before paving and/or final seeding;

f) Along the interior surface area of ditches;

g) Sites where work has been temporarily suspended (e.g., winter shutdown), and

h) Areas that will be mulched.

Flocculants should not be applied over surfaces of pure sand or gravel with no fines and should not be applied over snow cover.
The use of a visible tracer or colorant to visibly track flocculant application is recommended.

Liquid applications of flocculants will require the use of source water for mixing with a low turbidity (20 NTUs or less).

For turbidity reduction within sediment ponds, apply flocculants to conveyance ditches above the pond that discharge into the pond. Flocculants shall not be applied directly to pooled water within sediment ponds.

For **dewatering** and suspended solids removal of turbid pooled water within pipe tranches, silt traps, or other areas, flocculants may be introduced, in either liquid or solid forms, into the turbid water during pumping/evacuation of the pooled water. The pumping will provide turbulence for optimum mixing, with the discharge either pumped through a filter bag or jute-lined treatment ditch prior to ultimate discharge. Application rates as given in this specification for turbidity reduction for anionic PAM (and as given by the manufacturers' requirements for other types of flocculants) shall be strictly followed during dewatering.

Application requirements for the two main classifications of flocculants are as given below:

I. Anionic Polyacrylamide

Prior to use of any flocculant, the flocculant manufacturer's written application, storage, and mixing requirements and specifications shall be supplied to both TDOT and the Contractor. Anionic PAM shall be stored, handled, mixed and applied in strict accordance with the flocculant manufacturer recommendations and in strict compliance with OSHA Material Safety Data Sheet requirements, complying with all applicable federal, state, and local regulations. Proper personal protective equipment shall be used when handling the flocculant per industry, manufacturer, state, and federal regulations.

SPECIAL CARE SHALL BE GIVEN TO THE APPLICATION RATES FOR ANIONIC PAM SPECIFIED HEREIN TO ENSURE THAT THE MAXIMUM APPLICATION RATES ARE NEVER EXCEEDED. ADDING ADDITIONAL PAM BEYOND THE RATES SPECIFIED WILL NOT IMPROVE THE EFFECTIVENESS OF PAM BUT COULD PRESENT TOXICITY ISSUES TO RECEIVING STREAMS DOWN GRADIENT OF THE PAM APPLICATION ZONE.

For erosion control applications on sloped areas:

a) With hydroseeding applications, anionic PAM should be added as the last component to the hydroseeding mixture. When mixing, the Contractor shall never add water to anionic PAM. The Contractor shall add PAM at a slow rate to water. Mixing of anionic PAM for hydroseeding shall include agitation of the PAM/water mixture. The application method chosen must ensure uniform flocculant coverage to the target area.

b) The Contractor shall never use anionic PAM as the sole erosion control method for slopes; slope applications of PAM shall be accompanied with mulching.

c) For PAM tackifiers, dry PAM shall be dissolved with a known quantity of clean water in a container for several hours (preferably overnight.) PAM is to be applied at a rate in the range of 0.5 lb to 1.0 lb (maximum) per 1,000 gallons of water per acre application area via a hydro- mulch machine.

d) For soil binder applications, the Contractor shall dissolve pre-measured dry PAM with a known quantity of clean water in a container for several hours (preferably overnight.) PAM is to be applied at a rate range between 2/3 lb to 1 lb (maximum) PAM per 1000 gallons water per acre of bare soil.

e) Emulsion batches shall be mixed per the recommendations of the flocculant manufacturer to determine the proper product type and application rate to meet site-specific requirements. The chosen application method must ensure uniform coverage of the target application area.

f) When using an emulsion form of anionic PAM to slopes, apply no greater than 1.5 gallons emulsion per acre per event. Solution mixtures shall be 1.5 gallons (maximum) anionic PAM emulsion per 3000 gallons of water. Note: Water volumes that are less than 3000 gallons of water shall not be used due to increased viscosity issues.

g) The Contractor shall **s**pray the anionic PAM/water mixture uniformly across the dry soil slope until completely wetted.

h) For dry anionic PAM applications for erosion control, anionic PAM shall be applied as a powder at the following rates:

- For slopes less than 25% - Apply at 10 lbs per acre (maximum)
- For slopes greater than or equal to 25% - Apply at 20 lbs per acre (maximum)

i) Liquid anionic PAM for erosion control shall be reapplied on <u>actively worked areas</u> after a 48-hour period.

j) Liquid anionic PAM shall not be applied to the same slope area more than once in a 48-hour period and no more than 7 times in a 30-day period.

k) For inactive slope areas where anionic PAM has been applied, a reapplication shall be required once every two months.

l) **Note: Anionic PAM applications (dry or liquid) shall not exceed 200 lbs/acre per year.**

For turbidity reduction within ditches:

a) It is highly recommended that flocculant application be applied as erosion control in the watershed above the treatment ditches in conjunction with the application of flocculants within treatment ditches for turbidity control.

b) The surface area of stormwater ditches, as well as the surface area of ditch check dams, shall be lined with jute mesh.

c) Dry powder anionic PAM shall be applied over the jute mesh at a rate of 0.25 lb to 0.5 lb per 1000 square feet of ditch surface area.

d) Dry powder anionic PAM shall be re-applied to jute mesh in ditches every 3 to 5 storm events. **Dry anionic PAM application shall not exceed 4.6 lbs/1000 square feet per year.**

e) Anionic PAM bricks/logs shall be of appropriate size, shape, and number to deliver the appropriate dosage to the water within the conveyance. The flocculant manufacturer shall be consulted to provide brick/log dissolution rates and dosages.

f) Anionic PAM bricks/logs shall be located in a shaded, preferably moist, installation zone during application.

g) Anionic PAM bricks/logs shall be placed near the main flow area of the ditch, and they shall be placed at an appropriate distance above sediment ponds or traps to maximize mixing and flocculation. The manufacturer shall be consulted to provide guidance for flocculant mixing time required and block/log spacing configurations.

h) The Contractor shall install one anionic PAM brick/log for every 65 to 70 gpm of flow to be treated, unless otherwise specified by the flocculant manufacturer.

i) Unless otherwise specified by the flocculant manufacturer, anionic PAM bricks/logs are estimated to treat, on average, 475,000 to 550,000 total gallons of flow volume.

j) Stakes, mesh bags, cages, and other mechanisms to anchor bricks/logs in place shall be carefully installed to provide stability during flows and to maximize exposure of the brick/log surface area to flows.

k) Anionic PAM bricks/logs shall be replaced at least every 3 - 4 months or earlier if bricks/logs have excessive sediment/debris deposition on the outer brick/log surface area or excessive degradation of brick/log mass.

II. Miscellaneous Coagulant/Flocculant Materials

Miscellaneous flocculant materials shall include all other flocculants that are not polyacylamide blends and that have been pre-approved for use on TDOT projects through the TDOT Materials and Testing Division. Submittals of required information as given in the ***Materials*** and ***Classifications*** sections of this specification shall be strictly followed.

Prior to use of any flocculant, the manufacturer's written application, storage, and mixing requirements and specifications shall be supplied to both TDOT and the Contractor. Flocculants shall be stored, handled, mixed and applied in strict accordance with the flocculant manufacturer recommendations and in strict compliance with OSHA Material Safety Data Sheet requirements, complying with all applicable federal, state, and local regulations. Proper personal protective equipment shall be used when handling the flocculant per industry, manufacturer, state, and federal regulations.

Special care shall be given to the application rates for flocculants specified by the manufacturer to ensure that the maximum application rates are never exceeded.

For erosion and sediment control applications for sloped areas and ditches:

a) The Contractor shall strictly follow the manufacturer's requirements for application mixtures and rates.

b) With hydroseeding applications, flocculants shall be mixed in strict accordance with manufacturers written recommendations, as provided to TDOT and the Contractor.

c) Flocculants shall not be used as the sole erosion control method for slopes; slope applications of flocculants shall be accompanied with mulching. Flocculant use for turbidity reduction in ditches shall be used in conjunction with other structural sediment-control BMPs.

d) Re-application frequency and rates shall strictly follow manufacturer's written recommendations, as provided to TDOT and the Contractor.

e) Storage of flocculants shall follow manufacturers written requirements, as provided to TDOT and the Contractor.

Documentation and Maintenance

Flocculants will enhance the deposition of soil solids in downstream ditches, pipes, and ponds. These hydraulic structures shall be inspected regularly with solids routinely removed from these structures to ensure optimization of performance.

The Contractor shall provide suitable means for storing and protecting flocculants against moisture and sunlight.

TDOT field personnel shall maintain records of all flocculant applications including the following information:

a) Date, time, and specific location of application;

b) Rates of application;

c) Method of application;

d) Weather conditions, and

e) Type of flocculant applied including manufacturer name and product name.

Final Cleanup

The Contractor shall clean liquid or dry flocculant spills per the manufacturer's requirements. Flocculant mixing and application equipment shall be rinsed thoroughly with water to prevent the formation of residues. Unused flocculant mixtures should be minimized. Rinse residues can be applied to exposed slopes for erosion control. The Contractor shall dispose of excess flocculant material in compliance with federal, state, and local environmental regulations. Excess material shall not be disposed within stormwater conveyances, sewers, or streams.

The Contractor shall install and maintain all temporary erosion prevention and sediment control features and pollution prevention measures until no longer needed or permanent control measures are installed. Any materials removed shall become the property of the Contractor. In order to insure erosion prevention and sediment control structures work properly, it is imperative the sediment be removed and structural components of the measures maintained; therefore, inspection and maintenance of structures is to be performed on a regular basis. During sediment removal, the Contractor shall take care to insure that structural components of erosion prevention and sediment control structures are not damaged and thus made ineffective. If damage does occur, the Contractor shall repair the structures at his own expense. Upon complete removal of sediment traps, special ditches, etc., the area where they were constructed is to be topsoiled, seeded and mulched or otherwise stabilized.

In the event that temporary erosion prevention and sediment control measures are required due to the Contractor's negligence, carelessness, or failure to install permanent controls as a part of work as scheduled, and are ordered by the Engineer, such work shall be performed by the Contractor at his own expense. (See special provisions 107FP if applicable)

Where temporary erosion prevention and sediment control or pollution prevention work is acceptably performed and failure of all or any part of the system occurs but is not attributed to the Contractor's negligence, carelessness, or failure to install permanent controls and falls within the specifications for a work item that has a contract price, the units of work will be paid for at the proper contract prices except as noted below. Should the temporary erosion prevention and sediment control or pollution prevention work not be comparable to the project work under the applicable contract items, the Contractor shall be ordered to perform the work on a force account basis, or by agreed unit prices in compliance with **Subsection 109.04**.

Except as noted below, payment also may be made for replacement of temporary erosion prevention and sediment control and pollution prevention devices installed according to the plans or as approved by the Engineer provided such devices are no longer effective because of deterioration or functional incapacity, except that no payment shall be made for replacement of erosion prevention and sediment control or pollution prevention devices ineffective due to improper installation, lack of reasonable maintenance or because of failure of the Contractor to pursue timely installation of permanent control devices in accordance with the Plans and Specifications or as directed by the Engineer.

Unless provided for on the plans, no direct payment will be made for temporary and permanent erosion prevention and sediment control or pollution prevention measures in disturbed areas outside the rights-of-way such as borrow areas, waste areas and haul roads unless the borrow areas or waste areas are provided for by the Department, and except for permanent Seeding (with Mulch) on borrow areas and waste areas within the limitations prescribed in **Subsection 203.0**4 and **Subsection 203.07**, respectively. Where the plans show separate quantities for erosion prevention and sediment control or pollution prevention items to be used outside the rights-of-way in connection with waste areas, borrow areas or other project related construction, payment will be made for these items used and accepted to the extent of these separately listed plans quantities; but the cost of any overruns in these items, or the cost of any additional items required for erosion prevention and sediment control or pollution prevention off the rights-of-way, shall be borne by the Contractor unless prior approval in writing is received from the Engineer.

In case of failure of the Contractor to control project related erosion or the discharge of pollutants, either on or off the rights-of-way, the Engineer may withhold payment of future progress estimates until the Contractor has satisfactorily performed the necessary corrective measures. If deemed necessary, the Engineer may employ outside assistance or use his own forces to provide the needed protective measures, with all incurred direct costs plus project engineering costs being charged to the Contractor by appropriate deductions from the Contractor's monthly progress estimate.

Subsection 209.08-Revise entire subsection to the following:

209.08-Method of Measurement. Erosion prevention and sediment control devices shall be measured in accordance with the appropriate Standard Drawing or as noted below.

Temporary seeding and mulching operations will be measured in accordance with the appropriate provisions of **Subsection 801.09**.

Seeding (without Mulch) and Crown vetch mixture (without Mulch) shall be measured per unit.

The accepted quantities of Road and Drainage Excavation will be measured in C.Y. (m^3).

Sediment removal and disposal for maintaining erosion prevention and sediment control measures will be measured by the cubic yard (cubic meter).

For catch basin filter assemblies, structure maintenance including cleaning to prevent clogging is included in the price bid for the structure. Sediment removal and disposal for maintaining these assemblies is not to be measured and paid directly.

Sand bags will be measured by the square foot area of berm face.

Flocculants used for turbidity reduction will be measured and paid for by the actual weight in pounds of flocculant materials applied or, for brick or log forms of flocculant material, the brick/logs will be measured by the unit, per each. Such price and payment will be full compensation for all work covered by this section, including, but not limited to, furnishing all materials, labor, equipment and incidentals necessary to apply the flocculant materials. Flocculants used as either a soil binder or tackifier for erosion control applications shall be measured by the acre.

Subsection 209-09. Revise entire subsection to the following:

209.09-Basis of Payment. All Non-Structural Best Management Practices shall be included in the bid cost of the project.

Items used to install erosion prevention and sediment control devices include basis of payment information along with measurement information on the standard drawings. The standard drawing item numbers and measurement units shall be used for measurement and payment unless otherwise specified. All measures shall be constructed and accepted according to the applicable Standard Drawings and specifications prior to measurement and payment.

Additional information regarding basis of payment for erosion prevention and sediment control measures and components is listed below.

Unless otherwise stated on the corresponding Standard Drawings, payment for erosion prevention and sediment control measures shall include all materials and labor necessary for the measure's construction, maintenance and removal.

For catch basin filter assemblies, structure maintenance including cleaning to prevent clogging is included in the price bid for the structure. Sediment removal and disposal for maintaining these assemblies is not to be measured and paid directly.

Seeding (with Mulch), Seeding (without Mulch), Temporary Seeding (with Mulch) Crown vetch mixture (without Mulch) and Mulch items will be paid for in accordance with the appropriate provisions of **Subsection 801.10**.

The accepted quantities of Road and Drainage Excavation will be paid for at the contract unit price per C.Y. (m^3).

Sediment removal and disposal for maintaining erosion prevention and sediment control measures will be paid for at the unit price per C. Y. (m^3).

For catch basin filter assemblies, structure maintenance including cleaning to prevent clogging is included in the price bid for the structure. Sediment removal and disposal for maintaining these assemblies is not to be measured and paid directly.

Rock used for inlet and outlet control on erosion prevention and sediment control measures will be paid for at the contract unit price per ton (tonne).

Pipe used in the construction of erosion prevention and sediment control measures will be paid for in accordance with the appropriate provisions of **Subsection 607.13**.

Concrete used in the construction of spillways or other structures pertaining to sediment structures will be paid for in accordance with the appropriate provisions of **Section 703**.

Water used in preparation of the seed bed and for maintenance will paid for at the contract unit price per M.G. (1,000 gal.) (m^3) of water.

Sand bags will be counted per bag and will be paid for at the contract unit price per bag.

For flocculants, the accepted quantities, determined as provided above, will be paid for at the contract unit prices, which payment shall be full compensation for all equipment, materials, labor, and incidentals necessary to complete the work.

The Sediment Filter Bags will be paid for at the contract price bid per each for the size bag used which includes installation and/or replacement along with all materials, equipment, tools, labor, and incidentals to complete the work. Payment for removal and disposal of material from bag shall be made by the C.Y. (m^3) at contract price for sediment removal.

S T A T E **O F** **T E N N E S S E E**

(Rev. 06-01-06)
(Rev. 02-01-07)
(Rev. 12-30-08)
(Rev. 01-05-10)

March 1, 2006

Supplemental Specifications - Section 300

of the

Standard Specifications for Road and Bridge Construction

March 1, 2006

Subsection 303.08 (c) Second paragraph after (c), first sentence **Add** the word "exceeds" between the words "course" and "6 in. (150 mm)"

Subsection 303.13; Delete the second and third paragraphs and replace with the following:

The weight of total moisture, as determined by dry weights, of the base material at the time of weighing in excess of 3 percentage points of optimum moisture content, will be deducted. When mixing is performed in a stationary plant, no direct payment for water will be made. When road mixing is performed, water added to the material during mixing at the direction of the Engineer will be made for payment.

SECTION 304-SOIL-CEMENT BASE Insert the following in the Table of Contents section of 304

"304.11-Thickness and Surface Tolerances."

Subsection 304.04 Last paragraph, add the word "be" in this section of the paragraph

"the entire section shall be reconstructed…"

Subsection 307.03b Composition of Mixtures, Revise entire subsection b to the following:

(b) Recycled Asphalt Pavement.

The Contractor may utilize asphaltic concrete removed from a Department project or other State Highway Agency project by an approved method and stored in a TDOT approved stockpile. Recycled Asphalt Pavement (RAP) combined with the appropriate aggregate, asphalt cement, and anti-strip additive when required shall produce a mixture that will otherwise meet all the requirements of **Subsection 903.06** and the requirements herein **Section 307**. RAP shall be allowed in each mix listed in the following table:

Mix Type	%RAP (Non-processed)	Maximum %RAP (Processed)	Maximum % RAP Processed and Fractionated	Maximum Particle size
307ACRL	0	00	-	-
307AS	0	00	-	-
307A	15	20	35	1 ½ in. (38 mm)
307B	15	30	35	1 ½in. (38 mm)
307BM	15	30	35	¾ in. (19 mm)
307BM2	15	30	35	¾ in. (19 mm)
307C	15	30	35	3/8 in. (9.5 mm)
307CW	15	30	35	½ in. (13 mm)
307CS	0	15	25	5/16 in. (8 mm)

RAP that has been crushed and screened or otherwise sized such that the maximum recycled material particle size is less than that listed in the table above prior to entering the dryer drum, shall qualify as "Processed". "Non processed" **RAP** shall be similar material that has not been crushed and screened or otherwise sized previous to its use. When RAP is processed over more than one screen, producing sources of various maximum particle size (i.e. – ¾" to ½", ½" to #4, etc.), it will be referred to as "fractionated", and larger percentages will be allowed as noted above. These increased percentages will only be allowed provided the individual fractions are introduced into the plant as separate material sources for increased control.

All mixes shall contain at least 65% virgin asphalt.

The Contractor shall obtain a representative sample from the recycled material stockpile and establish a gradation and asphalt cement content as required. The Contractor shall determine the gradation and asphalt content of the recycled material at the beginning of a project and every 2,000 tons(2,000 metric tons) thereafter. The stockpile asphalt cement content for all recycled material shall not vary by more than 0.8%. The stockpile gradation tolerance for all recycled material on each sieve is listed below.

3/8 in. (9.50 mm) sieve and larger± 10%
No. 4(4.75 mm) sieve..... ± 8%
No. 8(2.36 mm) sieve..... ± 6%
No. 30(600 µm) sieve ..... ± 5%
No. 200(75 µm) sieve .....± 4%

The mixture will be accepted for aggregate gradation and asphalt content based on extractions

A special design with asphalt content in the range of 5 to 7% shall be required where 307 C Mix is used as a surface on the shoulder.

The Contractor shall be responsible for his own sampling and testing of the planings as well as new materials for bid purposes, and for the submission of the job mix formula in accordance with Subsection 407.03. All additives shall be submitted to the Engineer for approval at the same time other materials are submitted for design verification.

If the Department has performed tests on the pavement to be cold planed, the results of all tests will be available at the Materials and Tests Division in Nashville, Tennessee during normal working hours. This information is advisory only and shall not be construed as necessarily complete nor accurate.

Where it is necessary to obtain a sample of the existing pavement for mix design, the Contractor shall mill the existing pavement to the full depth shown on the plans for pavement removal for a length of approximately 300 ft. (100 m) in an area approved by the Engineer. The removed pavement shall be replaced as specified on the plans or directed by the Engineer.

After mixing, the moisture content of the total mix shall be no more than 0.1% as determined by oven drying, and the provisions for lowering the temperature because of boiling or foaming shall not apply.

(c) Anti-Strip Additive - Asphaltic concrete mixtures (Grading A, AS, ACRL, B, BM, BM2, C, CS and CW) shall be checked for stripping by the following methods:

1. The Ten Minute Boil test for dosage rate and the Root-Tunnecliff procedure (ASTM D 4867) for moisture susceptibility.
2. For mixtures not requiring design - the Ten Minute Boil test for dosage rate and moisture susceptibility.

   * Root-Tunnecliff procedure (ASTM D 4867) shall not be used with the following mixtures: Grading A, AS, ACRL and B

If moisture susceptibility is indicated, then an approved anti-strip agent shall be mixed with the asphalt cement at the dosage recommended by the respective test and as specified in **Subsection 918.09(B).**

Subsection 307.08 Method of Measurement, Revise entire subsection to the following:

307.08-Method of Measurement. Aggregate and Asphalt Cement for Bituminous Plant Mix Base (Hot Mix) will be measured by the ton (metric ton) in accordance with the provisions of **Subsection 407.19**. Materials for prime or tack coat, if specified, will be measured as prescribed in **Section 402** or **403**, respectively.

If recycled mix is permitted, the completed mix, including new mineral aggregate, planings, asphalt cement and additive, shall be measured by the ton (metric ton) in accordance with **Section 109**. For bidding purposes, the asphalt cement content of the specified mixes shall be used in the chart below:

Mix Type	Asphalt Content
307 A	4.0%
307 B	4.3%
307 BM	5.0%
307 BM2	5.0%
307 C	5.0%
307 CW	6.0%
307 CS	6.5%

In the event that the Engineer sets an asphalt content other than that stated above, a price adjustment will be made based on the asphalt content set by the Engineer and the Monthly Bituminous Index for the specific grade asphalt on the mix design. The price adjustment will be calculated according to the following formula:

PA = [MBI x (DA-BA) x T] / 100

Where:

PA = Price Adjustment
MBI = Monthly Bituminous Index
DA = Percent asphalt set on the mix design
BA = Percent asphalt specified above to be used for bidding
T = Total tons(metric tons) asphalt mix for price adjustment

The liquid anti-strip additive will be measured by the gallon(liter) and paid as outlined in **Subsection 307.09**. Hydrated Lime will be measured by the ton (metric ton) and paid as outlined in **Subsection 307.09.**

No direct payment will be made for polymer or latex additives and cost thereof shall be included in the price bid for the modified asphalt cement or modified mixture.

Subsection 309.13; Delete the second and third paragraphs and replace with the following:

> The weight of total moisture, as determined by dry weights, of the base material at the time of weighing in excess of 3 percentage points of optimum moisture content, will be deducted. When mixing is performed in a stationary plant, no direct payment for water will be made. When road mixing is performed, water added to the material during mixing at the direction of the Engineer will be made for payment.

Subsection 312.08 Last sentence, Add the word "exceed"

> "1 layer shall not exceed 8 in. (200 mm)."

Subsection 313.02-Materials, Add the following to the end of this section

Liquid Membrane – Forming Compounds 913.05

Subsection 313.05; section (a) 1. Add to the end of the paragraph

As an alternative to the steel wheel roller, the cement treated permeable base may be placed with a high-density screed with dual tamping bars.

Subsection 313.05; section (a) 2. Revise the first paragraph to read as follows

Curing; Immediately after spreading and compacting, the cement treated permeable base shall be cured by covering the entire surface and exposed edges with transparent or white polyethylene sheeting in accordance with **Subsection 501.18**, or a white pigmented wax base curing compound meeting the requirements of AASHTO M148. The polyethylene sheeting shall have a thickness of at least 4 mils (100 μm) and shall be held in place for a minimum of 7 days by a method approved by the Engineer. The surface of the cement treated permeable base shall be thoroughly wetted prior to placing the sheeting. The wax based curing compound shall be placed at a rate of 0.04 to 0.05 gallons per square yard (0.18 to 0.23 liter per square meter).

STATE OF TENNESSEE

March 1, 2006

(Rev. 02-09-09)
(Rev. 08-10-09)
(Rev. 01-05-10)
(Rev. 05-09-2011)
(Rev. 10-31-2011)
(Rev. 02-13-2012)

Supplemental Specifications - Section 400

of the

Standard Specifications for Road and Bridge Construction

March 1, 2006

Subsection 407.02 Materials, Add the following at the end of this subsection:

When warm mix asphalt additive is used as described in subsection **918.09(B)**, it shall be added by approved blending equipment at the contractor's mixing plant, or it shall be pre-mixed and delivered with the asphalt cement.

Subsection 407.03 (C) Replace the first paragraph with the following:

At least 14 working days prior to the scheduled start of production of any asphaltic paving mixture, the Contractor shall submit in electronic form(e-mail or on a floppy disk) a proposed Job Mix Formula and Laboratory Design, where applicable, prepared in accordance with the Marshall Method of Mix Design (AASHTO R-12), as modified by TDOT, or by Gyratory Compaction (AASHTO T 312, Preparing and Determining the Density of Hot Mix Asphalt (HMA) Specimens by means of the Superpave Gyratory Compactor). Regardless of which method is used, trial blends with at least 4 different asphalt contents (at least 2 above the optimum and 2 below the optimum) shall be made. When the gyratory method of compaction is utilized, the specimens shall be compacted to 65 gyrations with the optimum asphalt content and mixture volumetrics determined at that compaction level. If the specification requirements are not met, it will be necessary to make adjustments to the aggregate types and proportions. In addition the Contractor shall submit an asphalt barge certification with temperature-viscosity curve for each mixture to the Engineer for approval. A sample of each material to be used in the mix shall be delivered to the location designated by the Engineer.

Subsection 407.03 (D) 2 (c) Quality Control System: 8 d **Insert** as the second sentence

"The Contractor, at his risk, may continue to produce and place mixture after the first 500 tons without the test results complete, however all mixture subject to price adjustment or removal at the discretion of the Engineer if the test results do not comply with the specifications."

Subsection 407.03 (D), first paragraph, fourth sentence: **Remove** "on a random basis".

Subsection 407.03 (D) 2 (c) Quality control System, 6, last sentence: **Remove** "on a random basis".

Subsection 407.03 (D), **Table 407-01, Replace** "Required" with "Recommended" in the table heading.

Subsection 407.04a Bituminus Mixing Plant, Add the following to subsection "a" as the 12th bullet:

12. Warm Mix Asphalt process equipment.

    Modifications may be made to plants to reduce production and placement temperatures in accordance with subsection 407.21. Plant modifications for warm mix asphalt production temperatures shall be pre-approved by the department, and shall not detriment the plant's ability to maintain temperature control or mixture proportions.

    Modifications made to the plant to reduce mixing temperatures must meet the requirements listed for warm mix asphalt additives in the department's QPL.

Subsection 407.06-Bituminous Pavers: replace second sentence with:

"All paver extensions shall be full assembly extensions, including activated and heated screeds, auger extensions, auger guards, and throw-back blades to place mix beneath the auger gearbox."

Subsection 407.09 Replace subsection in its entirety with the following:

407.09 Weather Limitations. Bituminous plant mix may be placed on properly constructed and accepted sub-grade or previously applied layers provided the following conditions are met:

1. The sub-grade and the surface upon which the bituminous plant mix is placed shall be free of excessive moisture.
2. The bituminous plant mix shall be placed in accordance with the temperature limitations of the following table and only when weather conditions otherwise permit the pavement to be properly placed, compacted and finished.

TEMPERATURE LIMITATIONS

Compacted Thickness	Minimum Air or Surface Temperature	
	Unmodified mixes (PG 64, 67)	Modified mixes (PG 70, 76, 82)
1.5 in. (40 mm) or less	45° F (7° C)	55° F (13° C)
> 1.5 in. (40 mm) to < 3.0 in. (75 mm)	40° F (5° C)	50° F (10° C)
≥ 3.0 in. (75mm)	35° F (2° C)	45° F (7° C)

3. No bituminous plant mix, with a compacted thickness of 1.5 in. (40 mm) or less, shall be placed between November 30 and April 1; and further, no bituminous plant mix, with a compacted thickness greater than 1.5 in. (40 mm), shall be placed between December 15 and March 16.

4. The contractor may request for approval a variance from the above required temperature and seasonal limitations to pave at lower temperatures when there is a benefit to the public. The request shall be in writing, be submitted at least one week prior to the anticipated need, and must include a "Paving and Compaction Plan for Cold Weather" in accordance with the TDOT Procedure. The plan shall identify what practices and precautions the contractor intends to utilize to assure the mixture is placed and compacted to meet the specifications. The plan shall include compaction cooling curves estimating the time available for compaction, the intended production, haul, and compaction rates with paver and roller speeds estimated. Practices that should be considered include the addition of rollers, reduced production and paving rates, insulated truck beds, and heating the existing surface.

   If the Contractor cannot obtain the specified densities, then all paving operations shall cease and a new plan shall be developed. All mixture failing to meet specifications will be subject to price adjustments or removal and replacement at the Contractors expense.

Subsection 407.11 Preparation of Bituminous Material, Replace entire subsection with the following:

407.11-Preparation of Bituminous Material.

A. **Hot Mix Asphalt (HMA).** The bituminous materials for hot mixes shall be heated to the required mixing temperature in accordance with the following **Table B**:

Table B

PG Binder Grade	Minimum Temp.	Maximum Temp.
PG 64-22, PG 67-22	270° F(132° C)	310° F(154° C)
PG 70-22	290° F(143° C)	330° F(166° C)
PG 76-22	290° F(143° C)	330° F(166° C)
PG82-22	290° F(143° C)	330° F(166° C)

The temperature for Grading AS and Grading ACRL mixtures shall be between 225 and 275° F(110 and 135° C), except when modified binders are used, and then the temperatures shall be between 275 and 330°F (135 and 166°C). Aggregate should be coated and no visible drain down should occur in storage silos or hauling equipment."

B. **Warm Mix Asphalt (WMA).** The produced mixture may be subjected to reduced production and placement temperatures by means of either the addition of a chemical warm mix additive in accordance with subsection **918.09(B)** or by use of plant modifications in accordance with subsection **407.04(a).**

When either WMA technology is utilized, the maximum mixing temperature for any grade of asphalt cement shall be no more than 300ºF (135ºC). At the beginning of a day's production, the producer may produce up to five truckloads at temperatures in accordance with Table B in order to pre-heat placement equipment (pavers, transfer devices) prior to

producing WMA. The laboratory mixing and compaction temperatures shall be stated on the job mix formula during the mix design approval process. A tolerance of ±5.0ºF (2.8ºC) for each temperature will be allowed.

During test strip construction, the plant-produced WMA must exhibit the ability to meet test requirements for tensile strength ratio (TSR), conditioned tensile strength, Marshall Stability and flow, and boil test listed for HMA in specifications **307, 407,** and **411.**

Subsection 407.15 Revise the entire subsection to the following:

407.15-Compaction. After the bituminous mixture has been spread, struck off, and surface irregularities adjusted, it shall be thoroughly compacted. The method employed must be approved by the Engineer and be capable of compacting the mixture to the specified density while it is in a workable condition. When no density requirements are specified, a system of compaction for roadway pavements shall be employed which has previously produced required bituminous pavement densities. A control strip and random density samples may be employed to aid the Engineer in evaluating the system.

In general, compaction shall be accomplished by the use of a combination of the equipment designated in **Subsection 407.07**. The following are minimum roller requirements; however, the number of rollers shall be increased if the required results are not being obtained.

Except as noted below, each paving train shall consist of a minimum of 3 rollers as specified in **Section 407.07**. The intermediate roller in each train shall be a pneumatic type. If the surface course contains a latex or polymer additive, a steel wheel type roller for intermediate rolling may be used instead of a pneumatic type provided the surface course meets density requirements.

A minimum of 2 rollers will be required when placing 307 CS mix. Breakdown rolling shall be performed, as soon as possible and while the mixture is sufficiently hot, by a pneumatic tire roller having a minimum contact pressure of 85 psi (585 kPa). A combination roller may not be substituted for a pneumatic roller when placing CS mix. The paver speed shall be regulated so rollers can maintain proper compaction of the mixture as determined by the Engineer.

The minimum number of rollers listed above may, with the approval of the Engineer, be reduced to 1 roller of either the steel-wheel or vibratory type on the following types of construction; (a) On shoulder construction, (b) On incidental construction such as bridge approaches, driveways, etc., and (c) on projects containing less than 10,000 s.y. (9,000 m2) of bituminous pavement.

Unless otherwise directed, rolling shall begin at the low side and proceed longitudinally parallel to the road centerline. When paving in echelon or abutting a previously placed lane, the longitudinal joint shall be rolled first, followed by the regular rolling procedure. When paving in echelon, rollers shall not compact within 6 in. (150 mm) of an edge where an adjacent lane is to be placed. Rollers shall move in a slow uniform speed with the drive wheels nearer the paver and shall be kept as nearly as possible in continuous operation. Rolling shall continue until all roller marks are eliminated. Rollers shall not park on the bituminous pavement.

To prevent adhesion of the mixture to the rollers, the wheels shall be kept properly moistened with water or water mixed with very small quantities of detergent or other approved material. An excess of liquid shall not be used.

Rollers shall not be refueled on the bituminous pavements.

Density Requirements.

ADT 1,000 or less

MIX TYPE	% OF MAXIMUM THEORETICAL DENSITY (AVERAGE)	NO SINGLE TESTS LESS THAN, %
A	90	87
B, BM & BM2	90	87
C & CW	90	87
D	90	87
E	90	87

ADT 1,000 to 3,000

A	91	89
B, BM & BM2	91	89
C & CW	91	89
D	91	89
E	91	89

ADT 3,000 or greater

A	92	90
B, BM & BM2	92	90
C & CW	92	90
D	92	90
E	92	90

Any ADT

Shoulder Mix (B, BM, BM2, D or E)	88	85
A S and A-CRL	None*	None
CS	None*	None

* Density requirements shall be waived on Bituminous Plant Mix Base Grading ACRL, Grading AS and Bituminous Plant Mix Leveling Course, Grading CS; however, a system of compaction for roadway pavements shall be employed which has been approved by the Engineer. When placing Bituminous Plant Mix Base Grading ACRL and Grading AS, the intermediate roller (pneumatic tire) specified previously may be replaced by a steel wheel type if irreparable damage to the pavement is occurring.

The density (bulk specific gravity) determination for a compacted asphalt mixture shall be performed in accordance with AASHTO T-166, Method A only. All core samples shall be COMPLETELY DRY before testing. Air drying is permitted provided core samples are weighed at 2-hour intervals until dry in accordance with AASHTO T166, Section 6.1. Cores may also be dried in accordance with ASTM D7227.

Any base or surface course that tests below the minimum density shall be corrected until the density of the area is equal to or above minimum before it can be used to determine the average density of the lot. No successive layer, where applicable, shall be placed until the area has been corrected. When it is necessary to determine the classification of open graded or dense graded mixes and to measure segregation, ASSHTO T-269 or ASTM D-3203 shall be used.

For density testing purposes, the pavement shall be divided into lots of 10,000 s.y.(9,000 m2), except for 307 Gradings A, B and BM which shall be divided into lots of approximately 5,000 s.y.(4,500 m2). Five density tests shall be performed in each lot and the average results compared with the requirements listed above. At the beginning of the project or at any time it is deemed advisable, smaller lots may be considered in order to evaluate compaction methods or for other reasons which are approved and/or directed by the Engineer.

Acceptance test must be selected randomly and be representative of the lot or sublot. Additional compaction after the acceptance test is acceptable but the original test result must be used to determine lot density. TDOT may take information only samples to spot check compaction. These tests shall not be used as acceptance test.

Along forms, curbs, headers, walls and other places not accessible to the rollers, the mixture shall be compacted thoroughly with hot hand tampers, smoothing irons, or with mechanical tampers. On depressed areas, a trench roller may be used to compact the mix.

Any defective mixture shall be repaired or replaced to the satisfaction of the Engineer.

Test Strips.

Test Strips shall be required for all A, B, BM, C, CW, D, E and F mixes to establish rolling patterns, to calibrate nuclear gauges, to verify that the base course or surface course meets the density requirements of the specifications, and for mix design/ production verification as required.

Construction of the test strip shall be as follows:

1. The base course or other pavement course upon which a test strip is constructed shall have been approved by the Engineer prior to the construction of the test strip.
2. Equipment proposed for use in the compaction of test strips, shall meet the requirements set forth in this subsection and **Subsection 407.07**.

The test strip shall be constructed at the beginning of work on the pavement course. New test strips shall be required when:

1. a change in the job mix formula is necessary
2. a change in the source of materials occurs
3. a change in the material from the same source is observed
4. There is reason to believe that the test strip density is not representative of the bituminous mixture being placed.

With the approval of the Engineer, the Contractor may be permitted to construct additional test strips.

Each test strip shall be constructed with approved bituminous mixture and shall remain in place as a section of the completed work. Each test strip shall be 1 paver width wide and have an

area of at least 400 s.y. (350 m^2) and shall be of the depth specified for the pavement course concerned.

Compaction of the test strip shall commence immediately after placement of the bituminous mixture and be continuous and uniform over the entire test strip.

The compaction of the test strip shall be continued until no appreciable increase in density (1 lb/c.f.. (15 kgs/m^3)) as measured with the nuclear gauge can be obtained by additional roller coverage. The roller coverage necessary to obtain this maximum density shall be used as the rolling pattern for the remainder of the project. Cores shall be taken by the Contractor on the test strip at 10 randomly selected locations. Cores shall not be taken within 2 feet of the longitudinal edges for calibration or determining average densities. These cores shall be given to the State for use in calibrating the nuclear gauge and to verify that the average density of the test strip meets the density requirements of the specifications. All densities will be reported using the corrected nuclear gauge readings.

In the event the density of the asphaltic concrete in the test strip does not meet specification requirements, the Contractor shall make whatever changes are necessary to obtain the specified density. Other sources and combinations of aggregates shall be used as required, subject to approval of the Engineer, to produce a mix meeting the required density.

Subsection 407.16 – Joints, Replace the entire subsection with the following:

407.16-Joints. Placing of the bituminous paving shall be as continuous as possible. Rollers shall not pass over the unprotected end of a freshly laid mixture unless authorized by the Engineer. Transverse joints shall be formed by cutting back on the previous run to expose the full depth of the course. A brush coat of bituminous material shall be used on contact surfaces of longitudinal and transverse joints just before additional mixture is placed against the previously rolled material.

Subsection 407.20 B 1, Remove and replace the Quantity/Sublot Table with the following:

Quantity	Number of Sublots
3001-4500 tons	4 tests
2001- 3000 tons	3 tests
501-2000 tons	2 tests
Less than 500 tons	1 test

Subsection 407.20 B 3 (b), Add the following as the first sentence:

Washed gradation of the residual aggregate shall be performed according to AASHTO T-30.

Subsection 407.20, Table 407-2, Revise table to the following:

The percents passing the sieves will be determined in accordance with AASHTO T-30.

TABLE 407-2

ACCEPTANCE SCHEDULE OF PAYMENT (Asphalt Plant Mix Characteristics)			
Characteristics	**Pay Factor**	**Average Arithmetic Deviation of the Lot Acceptance Test from the Job Mix Formula**	
		1 Test	2 Tests or more
Asphalt Cement	1.00	0.00-0.30	0.00-0.25
Content ***	0.95	0.31-0.35	0.26-0.30
(Extraction or	0.90	0.36-0.40	0.31-0.35
ignition oven)	0.80*	over 0.40	over 0.35
Gradation			
3/8 In.	1.00	0.00-6.50	0.00-5.70
(9.5 mm),	0.95	6.51-7.08	5.71-6.20
Sieve and	0.90	7.09-7.66	6.21-6.69
Larger	0.80*	over 7.66	over 6.69
Gradation			
No. 4 Sieve**	1.00	0.00-4.62	0.00-4.00
(4.75 mm)	0.95	4.63-5.20	4.01-4.50
	0.90	5.21-5.77	4.51-5.00
	0.80*	over 5.77	over 5.00
Gradation			
No. 8 16, 30 & 50	1.00	0.00-3.80	0.00-3.30
(2.36 mm, 600 µm	0.95	3.81-4.46	3.31-3.91
& 300 µm ,) Svs**	0.90	4.47-5.12	3.92-4.52
	0.80*	over 5.12	over 4.52
Gradation			
No. 100 & 200	1.00	0.00-1.80	0.00-1.60
(150 µm & 75 µm)	0.95	1.81-2.00	1.61-1.75
Sieves**	0.90	2.01-2.20	1.76-1.90
	0.80*	over 2.20	over 1.90

*If approved by the Engineer, the Contractor may accept the indicated partial pay. The Department may require removal and replacement at no cost. The Contractor has the option to remove and replace at no cost to the Department at any time.

Subsection 411.03 Composition of Mixtures, Replace entire subsection with the following:

411.03-Composition of Mixtures.

(a) General Composition of mixtures used in this construction shall meet all applicable requirements of Subsection 407.03.

(b) The specified mineral aggregate and asphalt cement shall be combined in such proportions as to produce mixtures within the following master composition limits.

Proportions of Total Mixture, Per Cent by Weight

Surface Courses	Effective Combined Mineral Aggregate	Asphalt Cement
Grading D	93.0- 94.3	5.7-7.0*
Grading E	93.0- 94.3	5.7-7.0*
Grading E (shoulders)	92.0-94.7	6.0-6.5*

*If the effective combined specific gravity of the aggregate exceeds 2.80, the above proportions may be adjusted as directed by the Engineer. The upper limit for Flow values shall not apply to mixes with modified asphalt liquids.

Grading D

In addition to the other requirements of these specifications the composition of the mineral aggregate shall be such that when combined with the required amount of bitumen the resultant mixture shall have:

All Roads

Mix	Stabil. Min. lbft* (kN)	Flow 0.01 in. (mm) ***	Design Void content%*	Production Void Content %*	Min. VMA%*	Dust-Asphalt Ratio**
411D	2,000 (9.0)	8-16 (2-4)	4.0±0.2	3-5.5	14	0.6-1.2

*Tested in accordance with AASHTO T 245 with 75 blows of the hammer on each side of the test specimen, using a Marshall Mechanical Compactor.

**The dust to asphalt ratio is the percent of the total aggregate sample that passes the 200 mesh(75 µm) sieve as determined by AASHTO T 11 divided by the percent asphalt in the total mix

***Flow will only be required when using a non-modified binder (PG 64-22 or 67-22)

****In order to identify critical mixes and make appropriate adjustments, the mix design shall have these required production properties for the bitumen content range of Optimum Asphalt Cement ±0.25%.

When limestone screenings or agricultural limestone are utilized, the maximum amount by weight of the mineral aggregate shall be 25% unless the material is shown to meet the same coarse surface aggregate requirements for limestone as listed in **Subsection 903.11 (c) Grade D** (Types I, II, III, IV). In no case shall the combined aggregate blend consist of less than 75% non-skid material. When natural sand is used as fine aggregate, it shall be limited to a maximum amount of 25% by weight of the mineral

aggregate. A maximum of 5% mineral filler meeting the requirements of **Subsection 903.16** may be substituted for an equal quantity of the limestone fines. If the mixture does not comply with the design criteria, another source of aggregate shall be required.

When gravel is used as the coarse aggregate for a 411 Grading D mix, a minimum of 20% by weight limestone screenings, agricultural limestone and/or mineral filler shall be required.

Grading E

In addition to the other requirements of these specifications where Grading E is used for the riding surface the composition of the mineral aggregate shall be such that when combined with the required amount of bitumen the resultant mixture shall have:

High Volume Roads (ADT over 1,000)

Mix	Stability Min. lbft* (kN)	Flow 0.01in. (mm) **	Design Void content %*	Production Void Content %*	Min. % VMA *
411 E	2,000 (9.0)	8-16 (2-4)	4.0±0.2	3-5.5	14

Low Volume Roads (ADT 1,000 and below)

Mix	Stability Min. lbft* (kN)	Flow 0.01in. (mm)**	Design Void content %*	Production Void Content %*
411 E	1,500 (6.75)	8-16 (2-4)	3.5±0.5	2-5

*Tested in accordance with AASHTO T 245 with 75 blows of the hammer on each side of the test specimen, using a Marshall Mechanical Compactor.

**Flow will only be required when using a non-modified binder (PG 64-22 or 67-22)

*** Minimum stability for shoulder mixes will be 1500 lb.ft. (kN) and optimum Asphalt Cement content for shoulder mixes shall be as directed by the Regional Materials Supervisor.

If the design criteria above cannot be obtained with the aggregate, submitted to the laboratory for design, another source of aggregate will be necessary.

(c) Recycled Asphalt Pavement

The Contractor may utilize asphalt pavement that has been removed from a Department project or other State Highway Agency project by an approved method and stored in a TDOT approved stockpile. Recycled Asphalt Pavement (RAP) combined with the appropriate aggregate, asphalt cement, and anti-strip additive when required shall produce a mixture that will otherwise meet all the requirements of **Subsection 903.11** and the requirements herein **Section 411**. RAP shall be allowed in each mix listed in the following table:

Mix Type	%RAP (Non-processed)	Maximum %RAP (Processed)	Maximum % RAP Processed and Fractionated	Maximum Particle size
411D(PG64-22, PG67-22)	0	15	20	½ in. (12.5 mm)
411D(PG70-22)	0	10	15	½ in. (12.5 mm)
411D(PG76-22, PG82-22)	0	10	15	½ in. (12.5 mm)
411E(Roadway)	0	15	20	½ in. (12.5 mm)
411E(Shoulder)	15	30	35	½ in. (12.5 mm)

RAP that has been crushed and screened or otherwise sized such that the maximum recycled material particle size is less than that listed in the table above prior to entering the dryer drum, shall qualify as "Processed". "Non processed" RAP shall be similar material that has not been crushed and screened or otherwise sized previous to its use. When RAP is processed over more than one screen, producing sources of various maximum particle size (i.e. – ¾" to ½", ½" to #4, etc.), it will be referred to as "fractionated", and larger percentages will be allowed as noted above. These increased percentages will only be allowed provided the individual fractions are introduced into the plant as separate material sources for increased control.

All mixes shall contain at least 80% virgin asphalt except for 411E Shoulder Mix which shall have at least 65% virgin asphalt.

The Contractor shall obtain a representative sample from the recycled material stockpile and establish a gradation and asphalt cement content as required. The Contractor shall determine the gradation and asphalt content of the recycled material at the beginning of a project and every 2,000 tons (2,000 metric tons) thereafter. The stockpile asphalt cement content for all recycled material shall not vary from the Job Mix Formula by more than ± 0.8 %. The stockpile gradation tolerance for all recycled material on each sieve is listed below.

3/8in. (9.50 mm) sieve and larger .....± 10%
No. 4(4.75 mm) sieve.....± 8%
No. 8(2.36 mm) sieve.....± 6%
No. 30(600 µm) sieve.....± 5%
No. 200(75 µm) sieve.....± 4%

The Contractor will be responsible for his own sampling and testing of the RAP as well as new materials for bid purposes, and for the submission of the job mix formula in accordance with **Subsection 407.03**. After mixing, the moisture content of the total mix shall be no more than 0.1% as determined by oven drying, and the provisions for lowering the temperature because of boiling or foaming shall not apply.

The mixture will be accepted for aggregate gradation and asphalt content based on extractions or in accordance with AASHTO T 308.

(d) Anti-Strip Additive

Asphaltic concrete surface mixtures (Grading D & E) shall be checked for stripping by the Ten Minute Boil test for dosage rate and ASTM D 4867(Root-Tunnecliff procedure) for moisture susceptibility.

If moisture susceptibility is indicated, then an approved anti-strip agent shall be mixed with the asphalt cement at the dosage recommended by the respective test and as specified in **Subsection 918.09(B).**

Subsection 411.09-Method of Measurement. Remove and replace the entire subsection with the following:

Subsection 411.09-Method of Measurement. Mineral Aggregate including Mineral Filler, when required, and Asphalt Cement for Asphaltic Concrete Surface (Hot Mix) will be measured as prescribed in Subsection 407.19. Mineral Filler when required will not be measured for payment separately, but will be included as mineral aggregate.

If recycled mix is permitted, the completed mix, including new mineral aggregate, planings, asphalt cement and additive, shall be measured by the ton (tonne) in accordance with Section 109. For bidding purposes, the asphalt cement content of the specified mix shall be used in the chart below:

Mix Type	Asphalt Content
411-D	5.9%
411-E Roadway	6.3%
411-E Shoulder	6.3%

In the event that the Engineer sets an asphalt content other than that stated above, a price adjustment will be made based on the asphalt content set by the Engineer and the Monthly Bituminous Index for the specific grade asphalt cement on the mix design. The price adjustment will be calculated according to the following formula:

PA = [MBI x (DA-BA) x T]/100

Where:

PA = Price Adjustment

MBI = Monthly Bituminous Index

DA = Percent asphalt set on the mix design

BA = Percent asphalt specified above to be used for bidding

T = Total tons (metric tons) asphalt mix for price adjustment

The liquid anti-strip additive will be measured by the gallon(liter) and paid as outlined in Subsection 411.10. Hydrated Lime will be measured by the ton(metric ton) and paid as outlined in Subsection 411.10.

No direct payment will be made for polymer or latex additives and cost thereof shall be included in the price bid for the modified asphalt cement or modified mixture.

Subsection 414.03, Revise entire section as follows:

414.03-Composition of Mixture. At least 2 weeks prior to beginning work the Contractor shall submit a signed original of a mix design covering the specific materials to be used on the project to the Materials and Tests Division for acceptance together with representative samples of each ingredient to be used in the mixture. The samples should contain information relative to sources, type of materials and project number.

This design must have been performed by a qualified laboratory. Once the materials are approved, no substitution will be permitted unless first tested and approved by the laboratory preparing the mix design. No work shall begin nor will any mixture be accepted until the Materials and Tests Division has evaluated and accepted the mix design.

The laboratory report will show the results of tests performed on individual materials, comparing their values to those required by this specification. Job aggregates will be used in all laboratory design tests. Mixing tests must pass at the maximum expected air temperature in ISSA T113.

Slurry Seal . The laboratory report will provide the following information on the slurry seal mixture.

Quick-Set Emulsified Asphalt Slurry Seal

Mixing Time Test, seconds @ 77° F(25° C) (TB #113),	120 minimum
Mix Time @ (50° and 100° F) (10° and 37.7° C)	(informational)
Set Time Tests	
30-Minutes-Blotter Test (TB #102)	no brown stain
Displacement Test	no displacement
Water Resistance Test @ 30 minutes (TB #102)	no discoloration
Wet Stripping Test, % coating (TB #114)	90% minimum
System Compatibility (TB #115)	Pass
Set Time Tests: 30 minutes (TB #139)	12 kg-cm minimum
Early Rolling Traffic Time: 2 hours (TB #139)	20 kg-cm minimum

Wet Track Abrasion Test, loss in g/ft2 (g/m2) (TB #100)	75(800) maximum 6 day soak

In addition to the tests specified above, the following test will be required on roadways having greater than 1500 ADT.

ISSA T #109	Test Method for Measurement of Excess Asphalt in Bituminous Mixtures by Use of a Loaded Wheel Tester and Sand Adhesion
1,500-3,000 ADT	Maximum 55grams/psf (590g/m^2) sand adhesion, 1,000 cycles @ 125 lbs. (57 kgs).
3,000+ ADT	Maximum 50grams/psf (540g/m^2) sand adhesion, 1,000 cycles @ 125 lbs.(57 kgs).

Slurry Seal Composition. Emulsified asphalt slurry seal shall be a uniform mixture of aggregate, emulsified asphalt, latex solids when specified on the Plans, mineral filler and water. Compatibility of all ingredients (including the mix set additive) of the mix shall be certified by the emulsified asphalt manufacturer.

The percent of residual asphalt based on the weight of the dry aggregate shall be between 7.5 and 13.5 with a mixture control tolerance of ±0. 50%.

The aggregate gradation and percent residual asphalt, as provided in the slurry seal design accepted by the Engineer, shall be maintained within the mixture control tolerances stated herein.

Portland cement may be added to obtain the desired dispersion and working characteristics of the slurry. Such addition shall be stated on the slurry seal design, shall not exceed 3% of the weight of the aggregate, and shall have a mixture control tolerance of ±0.25%.

Portland cement added for dispersion of the slurry seal shall be a commercial quality, non-air entraining cement and shall not be considered as mineral filler for the purpose of satisfying the gradation requirements of the aggregate.

The aggregate shall be prewetted with a minimum amount of water prior to blending with the emulsified asphalt to obtain a fluid, homogeneous slurry mixture of the proper consistency. No additional water above that quantity required by the slurry seal mix design shall be added to the slurry mix in order to obtain a more workable mixture.

Micro Surfacing. The laboratory report will provide the following information on the micro-surface mixture.

Mixing Time Test, secs @ 77° F (25° C), (T-102)	120 minimum
Mix Time @ 50 and 100° F (10° C and 37.7° C)	(informational)
Set Time Tests: 30 minutes (T-139)	12 kg-cm minimum
Early Rolling Traffic Time: 60 minutes	20 kg-cm minimum

(T-139)	
Wet Stripping Test, % coating (T-114)	90% minimum
Wet Track Abrasion Test, loss in g/ft^2 (g/m^2) (T-100)	75 (800) max 6 days 50 (538) max. 1 hour
Measurement of Excess Asphalt (T-109)	Max. 50 $grams/ft^2$ (540 $grams/m^2$) Sand Adhesion, 1,000 Cycles @ 125 lbs. (57 kgs).
Classification Compatibility (T-144)	11 pt. minimum
Loss on Ignition (LOI) Test, TDOT Spec. 40703 E	(informational)

Micro-Surface Composition. For the paving mixture, the design shall verify the functioning of the set regulating additives and shall present certified test results for the Engineer's approval. Aggregate in the mixture shall represent material to be used on the project.

The Engineer shall approve the design prior to use. Proportions for the design shall be within the following limits:

Modified Emulsified Asphalt Residue by Dry Wt. of Aggregates	5.0-9.0%
Mineral Additive by Dry Weight of Aggregate	0.5%-3.0%
Latex or Polymer Based Modifier provide the specified properties	3% minimum and as required to
Mix Set Additive	As required to provide the specified properties
Water	As required to produce consistency

Portland cement may be added to obtain the desired dispersion and working characteristics of the mix. Such addition shall be stated on the micro-surface design, shall not exceed 3% of the weight of the aggregate, and shall have a mixture control tolerance of ±0.25%.

Portland cement added for dispersion shall be a commercial quality, non-air entraining cement and shall not be considered as mineral filler for the purpose of satisfying the gradation requirements of the aggregate.

The mixture shall also be proportioned such that the test strip requirements in **Subsection 414.06** are achieved.

Applicable Specifications. The following specifications and test methods form a part of this specification.

Title	Source
Mixing, Setting and Water Resistance Test to Identify "Quick-Set" Emulsified Asphalts	ISSA TB-102
Wet Track Abrasion of Micro Seals	ISSA TB-100
Measurement of Micro-Seal Consistency	ISSA TB-106
Test Method for Measurement of Excess Asphalt in Bituminous Mixtures by Use of a Loaded Wheel Tester	ISSA TB-109
Outline Guide Design Procedure for Slurry -Seal	ISSA TB-111
Method to Estimate Micro-Seal Spread Rates and to Measure Pavement Macrotexture	ISSA TB-112
Trial Mix Procedure for Slurry -Seal Design	ISSA TB-113
Wet Stripping Test for Cured Slurry-Seal Mixes	ISSA TB-114
Test Method to Classify Emulsified Asphalt/Aggregate Mixture Systems by Modified Cohesion Tester. Measurement of Set and Cure Characteristics	ISSA TB-139
Classification Compatibility	ISSA TB-144
Design, Testing and Construction of Micro-Seal	ASTM D 3910
Quantitative Extraction of Bitumen for Bituminous Paving Mixtures	ASTM D 2172

The blended asphalt mixture, when combined with aggregate and mineral filler, shall have the following characteristics:

1. Be capable of filling up to ½ in. (13 mm) wheel ruts in one pass.
2. Be capable of field regulation of the setting time.
3. Be suitable for nighttime placement.

Subsection 414.04, Revise subsection as follows:

414.04-Equipment. All equipment necessary for the satisfactory performance of this work shall be on hand and approved before the work is permitted to begin. All equipment, tools, and machines used in the performance of this work shall be maintained in satisfactory working condition. The Contractor shall have available at all times a device capable of determining aggregate moisture within 3 minutes.

All trucks shall be covered immediately after loading with a cover of canvas or other suitable material. The cover shall lap down along the sides and rear of the truck bed a minimum of 6 in. (150 mm) and be secured by tie downs at a maximum of 5 ft. (1.5 m) spacing along the sides and rear of the truck bed. All trucks must be equipped to meet the above requirements prior to commencing hauling operations.

Power brooms, power blowers, air compressors, water flushing equipment and hand brooms shall be capable of thoroughly cleaning all cracks and the old surface. Hand squeegees, hand brooms, shovels and other incidental equipment shall be provided as necessary to perform work.

Mixing Equipment. The mixing equipment shall be re-supplied with all materials while depositing the mixture on the roadway in order provide a continuous, non-stop surfacing operation. The paving mixture shall be produced in a self-propelled, front feed, continuous loading, mixing machine equipped with a positive, non-slipping aggregate delivery system and an interconnected, positive displacement water-jacketed gear pump to accurately proportion ingredients.

The mixing machine shall be equipped with an approved fines feeder that has an accurate metering device or method to introduce a predetermined amount of mineral filler into the mixer at the same time and location as the mineral aggregate. A spray bar shall be provided to completely wet the aggregate dropping down to the pug mill with additive and water. The twin-shafted multi-blade pug mill shall be a continuous flow type and a minimum of 50 in. (1.25 m) long. The emulsion shall be introduced above the third point of the mixer to ensure proper premixing of the aggregate, cement, additive and water when the modified emulsified asphalt is added. Blade size and side clearances shall meet the equipment manufacturer's recommendations.

Mixing shall be done in a manner that does not cause premature breaking of the emulsified asphalt. The mixing unit of the mixing chamber shall be capable of thoroughly blending all ingredients.

The mixer shall be equipped with a remote forward speed control at the back mixing platform so the back operator can control forward speed and level of mixture in paving or rut box. Effective April 1, 2006, the Contractor shall provide a computerized material monitoring system with integrated material control devices that are readily accessible and positioned so the amount of each material used can be determined at any time. The mixer shall be equipped with a back-up electronic materials counter that is capable of recording running count totals for each material being monitored. The mixer shall be equipped with a radar ground measuring device. Each material control device shall be calibrated prior to each mix application and as often thereafter as deemed necessary by the Engineer. The computer system shall have the capability to record, display and print the following information:

- Individual sensor counts for emulsion, aggregate, cement, water and additive
- Aggregate, emulsion, and cement output in lbs.(kgs) per minute
- Ground travel distance. The mixer shall be equipped with a Radar Ground metering device
- Spread rate in lbs./s.y.(kgs/m^2)
- Percentages of emulsion, cement, water and additive
- Cumulative totals of aggregate, emulsion, cement, water and additive
- Scale factor for all materials

The computer system shall be functional at the beginning of work, and must be functional during each calibration.

The mixing machine shall be equipped with a water pressure system and fog type spray bar, adequate for complete fogging of the surface preceding spreading equipment of the mixture.

The mixing machine shall include controls for proportioning and calibrating the aggregate feed. The aggregate feed device shall be equipped with a revolution counter so that the amount of aggregate used may be determined at any time and shall have a positive locking feed gate.

The emulsion pump shall be of the positive displacement type and shall be equipped with a device so that the amount of emulsion used may be determined at any time. The emulsion pump, meter and piping shall be arranged to afford a means to calibrate the meter by weighing a metered volume. The pump shall deliver the emulsion to the mixer box at a uniform rate which shall not vary more than 2% from the required quantity.

The water pump shall be equipped with a minimum of 2 valves. One valve shall establish the required water flow. The other valve shall be a quick acting valve to start and stop the water flow.

The mixing machine shall have sight gauges located at the material storage tanks for the asphalt emulsion and water.

The mixing machine shall be equipped with approved metering devices so that it can be accurately calibrated and the quantities of materials used during any 1 period can be closely estimated. In the event that the metering devices stop working properly, the mixing machine shall no longer be used until necessary repairs have been made.

Satisfactory means shall be provided to afford positive interlocking control between the flow of aggregate from the bins and the flow of emulsion from the pump. Each mixing unit shall be calibrated in the presence of the Engineer prior to construction. The documentation shall include an individual calibration of each material at various settings, which can be related to the machine's metering devices. When calibrating the emulsion system, a minimum of 3 tests shall be run, with each test run being a minimum of 40 gal. (150 liters). Calibration of the aggregate delivery system shall require tests at 3 different gate settings with 2 test runs at each gate setting and a minimum of 425 lbs. (193 kgs) per test run. Calibration of the filler(cement) delivery system shall require 3 tests at a minimum of 25 lbs. (11 kgs) per test. The scales used shall be certified. No machine will be allowed to work on the project until the calibration has been completed and accepted. Additional calibrations may be required during the process of the work as directed by the Engineer.

Spreading Equipment. Attached to the machine shall be hydraulically adjustable(adjustable while applying mixture) type spreader box with a positive screed adjustment for yield control and a positive adjustment for the joint matcher. The box shall be attached to the mixer, equipped with ribbon flights mounted on an adjustable shaft to continually agitate and distribute the materials throughout the box. The box shall be equipped with curb bumpers and replaceable runners with a minimum of 5 ft. (1.5 m) long end runners. The box shall be equipped with a sufficient walkway to provide access to either side of the spreader box without walking through the freshly laid material. The spreader box shall be heavy duty with crossbracing for rigidity and a manufacturer's weight not less than 1,400 lbs. (635 kgs) at a width of 12 ft. (3.6 m). The box must be capable of laying mix to a width of 14 ft. (4.3 m). The equipment shall provide sufficient turbulence to prevent the mix from setting in the box or causing excessive side build-up or lumps. To prevent the loss of the mixture from the box, the Contractor shall attach flexible seals, front and rear, in contact with the road. The full width application box shall be equipped with a secondary strike-off located approximately 2 to 3 ft. (0.5 to 1.0 m) behind the primary strike-off to minimize transverse corrugations. The secondary strike-off shall have elevation and width adjustments similar to the primary strike-off. It shall have a pivot point where it can be

tilted for texturing or raised completely off the surface. Rut filling shall require a steel or high density strike-off on the spreading equipment (as approved by the engineer) or the use of a rut box. A rut box shall be used for filling ruts in excess of 3/8 in. (10 mm) unless otherwise specified on the plans. The Contractor shall operate the spreading equipment in such a manner to prevent the loss of the mixture on super-elevated curves. Mixture shall be spread to fill cracks and minor surface irregularities and achieve a uniform skid-resistant surface without causing skips, lumps or tears in the finished mat.

For slurry seals, the use of burlap drags or other drags necessary to obtain the desired finish, shall require approval by the Engineer. Drags having excessive build-up shall be replaced. Drags shall be kept in a completely flexible condition at all times. No drags shall be used on Micro-surfacing.

Subsection 414.06, Revise subsection as follows:

414.06-Application. Prior to the placement of the mixture, a tack coat of SS-1h, CQS-1h or CQS-1hp emulsion shall be applied with an asphalt distributor. The tack coat shall consist of 1 part emulsion and 3 parts water. The application rate shall be 0.10 to 0.15 gal./s.y.(0.5 to 0.7 L/m^2) of the diluted emulsion. The actual application rate shall be determined by the Engineer. The method of application of the tack coat shall be in accordance with **Section 403**.

The emulsified asphalt slurry seal shall be applied at a rate of 16 ±2 lbs./s.y.(of 8.75 ±1 kgs/m^2) based on dry aggregate weight unless otherwise specified on the Plans. The rate of application shall be varied within the range specified above as required by the condition of the pavement to obtain a minimum thickness of 1/8 in. (3 mm) above the high points of the milled areas and ¼ in. (6 mm) thickness on unmilled areas.

Micro-surface shall be applied as follows:

- Rutfill Course. If a rut fill course is specified, apply enough material to fill the wheel paths without excess crowning (overfilling). An excess crown is defined as 1/8 in. (3 mm) after 24 hours of traffic compaction. Apply rut fill courses in widths from 5 to 6 ft. (1.5 to 1.8 m) for each wheel path. Provide a smooth, neat seam where 2 rut fill passes meet. Take care to restore the designed profile of the pavement cross-section. Feather the edges of the rut fill course to minimize the use of excess material.
- Leveling Course. If a leveling course is specified, apply at a rate of 14 ±2 lbs /s.y. (7.6 ±1.1 kgs/m^2) based on dry aggregate.
- Surface Course. If a surface course is specified and it is placed over a leveling course, apply at a rate of 18 ±1 lbs/s.y. (8.7 ±0.6 kgs/m^2) based on dry aggregate. If a surface course is specified and it is not placed upon another micro-surfacing course, apply the paving mixture at a minimum rate of 22 lbs/s.y. (11.9 kgs/m^2) based on dry aggregate.

Micro-surface shall be applied at the rates as specified on the plans for leveling and surface courses.

The mixture shall be applied based on dry aggregate weight as specified on the plans.

The maximum allowable speed of the machine shall be 130 ft. (40 m) per minute. When rut filling, the maximum allowable speed shall be determined by the Engineer. The final surface seal shall be placed uniformly across the width of the traffic lane unless otherwise specified or

directed. The action of the squeegee shall permit the mix to flow freely leaving a smooth, uniformly textured surface.

Unless otherwise directed by the Engineer, the surface shall be pre-wetted with water by fogging ahead of the spreader box. Pre-wetting shall be closely controlled to prevent accumulation of water to the point of running off or puddling.

As the aggregate and emulsion are being loaded into the aggregate/emulsion support trucks or mixing machine, the aggregate shall be given a final screening by sieving it through screening equipment capable of removing any random oversize material.

The mixture shall be of the desired consistency when deposited on the surface after which no additional elements shall be added. A sufficient amount of mixture will be carried in all parts of the spreader at all times so the complete coverage is obtained. No lumping, balling or unmixed aggregate shall be permitted. No segregation of the emulsion and aggregate fines from the coarse aggregate will be permitted. If the coarse aggregate settles to the bottom of the mix, the mix will be removed from the pavement. The mixture shall have proper consistency so that excessive splattering and excessive free water is avoided. The spraying of water into the spreader box during lay down operations will not be permitted. Hand tools, lutes and squeegees shall be used to spread mix on areas not accessible to the machine spreading equipment. Rolling with a pneumatic-tired roller shall be required after proper curing for sections of pavement not to be exposed to traffic. The roller shall be equipped with tires with a pressure of 40-60 psi(275 to 425 kPa).

Quality Control: The Contractor shall produce a mixture that will be in compliance with the mix design and the quality control tolerances. The Slurry Seal or Micro-Surface shall be applied at the rates as specified on the plans. The methods described in this section shall be used by the Contractor to measure compliance. Contractor shall maintain all quality control documentation and make available to the Engineer or Project Inspector upon request or at completion of work.

a. Asphalt Content – The Contractor shall calculate the % asphalt content of the mixture from the equipment computer display readings randomly, a minimum of 3 times a day. The quality control tolerances from the mix design is ± 0.5%.

b. Application Rate – The Contractor shall calculate the yield of the course being placed from the equipment computer display readings randomly, a minimum of 3 times a day. The quality control tolerance from the specified application rate is ±2 lbs/s.y. (±1 kg/m^2).

c. Documentation – The Contractor shall maintain a daily report and a lot sheet as follows:

   1. Daily Report – The daily report shall include the following information:
      - Aggregate used, ton(metric ton) (dry)
      - Slurry or Micro-Surfacing emulsion used, ton(metric ton)
      - Bituminous Materials for Tack Coat and for Fog Seal, ton (metric ton)
      - Cement used, ton(metric ton)
      - Water used in mixture, gallons(liters)
      - Additive used in mixture, gallons(liters)

d. Test Strip Construction - Prior to production application, the Contractor shall place a 1,000 ±50 ft. (300 ±15 m) test section to verify a quick traffic system is being used. The

test strip shall be placed at the same time as paving is to take place, night or day, and under the same ambient conditions. The test strip shall be able to carry normal traffic within 60 minutes. If normal traffic cannot be carried, the emulsion or mixture must be adjusted and another test strip will be required.

Lot Sheet - The project shall be segmented into lots with any 1 lot not to exceed 20,000 s.y.(16,700 m^2). For each lot the Contractor shall maintain a lot sheet, providing the following information:

- Control Section, Job Number, Route, Engineer (Project Inspector)
- Date, Air Temperature
- Control Settings, Calibration Values, Unit Weight of Emulsion (lbs per gallon) (kgs per liter), Percent residue in Emulsion.
- Beginning and Ending Intervals
- Computer display readings for material usage (Beginning, and Ending, and Total)
- Length, Width, Total Area (s.y.) (m^2), (lbs.) (kg) of Aggregate, lbs. (kg) of Emulsion, lbs. (kg) of Cement.
- Percent of each Material, Percent of Asphalt Cement, Application Rate, Combined Application Rate (lbs./yd^2) (kgs/m^2)
- Mix Design (Percent Portland Cement, Percent Emulsion, Percent Asphalt Cement)
- Contractors Authorized Signature
- Calibration Forms

Subsection 414.09, Revise subsection as follows:

414.09-Weather Limitations. Micro-surface and slurry seal shall be placed only when the pavement surface temperature and the ambient air temperature are a minimum 50° F(10° C) and rising. These applications will not be placed during foggy or rainy conditions. Placement shall be limited to the period from April 1 to October 31.

Subsection 414.11, Revise the first and second paragraphs to as follows:

414.11-Method of Measurement. Emulsified Asphalt Slurry Seal will be measured by the square yards(meters) in place as completed and accepted. The quantity of aggregate for Micro Surfacing, including mineral filler, shall be measured by the ton(metric ton) (dry), based on the calibrated metering devices affixed to the micro-surface mixing machine. The quantity of latex or polymer modified emulsion used in the accepted portion of the Micro- surfacing shall be measured by ton(metric ton) of material based on the calibrated metering device affixed to the micro-surface mixing machine. Bituminous Materials for Tack Coat and for Fog Seal, will be measured and paid for by the ton(metric ton) of undiluted emulsion. The quantity for "Bituminous Material for Tack Coat", Item No. 403.01, should be ¼ of the estimated application rate. No direct payment will be made for the latex or polymer additives when used and the cost thereof shall be included in the price bid for the respective items.

For bidding purposes, the emulsified asphalt content on the slurry mix design shall be 15% and for micro-surfacing design the asphalt content shall be 12%. In the event that the Engineer sets an emulsified asphalt content for slurry seal other than that stated above, a price adjustment will be made based on the emulsified asphalt content set by the Engineer and the invoice price of

the emulsified asphalt F.O.B. the project delivery point. The price adjustment will be calculated according to the following formula:

Subsection 415.02, (**Delete** the third paragraph) "When milling the Interstate…"

STATE OF TENNESSEE

March 1, 2006

Rev. 07-01-07
Rev. 12-13-2010

Supplemental Specifications - Section 500

of the

Standard Specifications for Road and Bridge Construction

March 1, 2006

Subsection 501.03, Remove and Replace the entire subsection with the following:

501.03-Proportioning and Quality Assurance of Concrete.

A. Proportioning :

The Contractor shall submit the proposed concrete design to the Engineer for approval. The design shall be determined using saturated surface dry aggregate weights and shall be verified by the use of trial batches meeting the requirements of these specifications. The concrete design shall be prepared by a TDOT certified Class 3 concrete plant technician, or by an approved independent testing laboratory under the direction of a registered professional civil Engineer, licensed by the State of Tennessee. The concrete plant technician or the Civil Engineer shall certify that the information contained on the design is correct and is the result of information gained from the trial batches. Trial batches for design, including admixtures in the proper proportion, shall be built no more than 90 days prior to the design submittal. All cost of concrete design, preparation and submittal shall be the responsibility of the Contractor.

The concrete design shall be air entrained and produce a workable concrete mix meeting the following design and production parameters:

CLASS CP - PAVING CONCRETE

28 day Compressive strength, min. (PSI)	**Minimum cementitous content (pounds per CY)**	**Maximum Water/cement ratio (lb/lb)**	**Air Content (%)**	**(inch)**
3000	526[1] 545[2]	0.49	5% design 3-8 % production	0-2.0[3] 3±1[4]

[1]-526 lbs required when the coarse aggregate is crushed stone
[2]-545 lbs required when the coarse aggregate is gravel
[3]-Allowable slump for slipform paving
[4]-Allowable slump for other than slipform paving

Chemical Admixtures shall be included in the concrete mixture as specified in the following table based on the ambient air temperature and expected weather conditions.

Class of Concrete	**Temperature less than 85° F(30 ° C) and falling**	**Temperature 85° F(30° C) or greater and rising**
CP	Type A or Type F	Type D or Type G

Admixtures to be incorporated into the concrete shall all be from the same manufacturer, shall be incorporated into the concrete in accordance with the manufacturer's recommendations, subject to approval by the Engineer.

The proposed concrete design submittal shall contain as a minimum the following information:

Source of all aggregate
Brand and type of cement
Source and class of fly ash (if used)
Source and grade of ground granulated blast furnace slag (if used)
Specific gravity of cement
Specific gravity of fly ash (if used)
Specific gravity of ground granulated blast furnace slag (if used)
Admixtures (if used)
Gradation of aggregates
Specific gravities of aggregates (saturated surface dry)
Air content (if air entrainment is used)
Percentage of fine aggregate of the total aggregate (by volume)
Slump
Weight per cubic yard(m3)
Yield
Temperature of plastic concrete
Water/cement ratio lb./lb.(kg/kg)
7 day compressive strength [minimum of 3 x 6-in. x12in. (150mm x 300mm) cylinders]
14 day compressive strength [minimum of 3 x-6in. x12in.(150 x 300 mm) cylinders]
28 day compressive strength [minimum of 3 x-6in. x12in.(150mm x 300mm) cylinders]
Weight of each material required to produce a yd3(m3) of concrete

In lieu of the above mix design submittal, the Contractor may submit for approval to use an existing design (Contractor or Department prepared) approved by the Department within the current calendar year. The approval of this concrete design submittal will not relieve the Contractor of the responsibility of providing concrete meeting the requirements of these specifications. A temporary mix design may be issued if the 7 day compressive strengths exceed the required 28 day strengths.

If materials from sources other than those shown on the approved concrete design are to be used, the Contractor must submit and obtain approval of a concrete design showing these sources. No concrete shall be accepted with materials that are not shown on an approved concrete design.

In addition to the option to use Type I-SM cement, the contractor may have the option to replace a portion of Type I cement in Portland cement concrete, up to a maximum specified herein, with fly ash and/or ground granulated blast furnace slag. It is the Contractors responsibility, if he chooses to use fly ash and/or ground granulated blast furnace slag as a partial cement replacement, to provide Portland cement concrete of the design strengths specified in all applicable special provisions, on the plans, or in the standard specifications. Type I-SM cement or Type I cement with fly ash or ground granulated blast furnace slag as a partial cement replacement will not be used in concrete when high early strength is specified. When the Contractor elects to replace a portion of Type I cement with fly ash and/or ground granulated blast furnace slag, the following requirements must be verified prior to producing any Portland cement concrete:

1. Fly ash or ground granulated blast furnace slag shall be stored in silos separate from each other and separate from the Type I cement.
2. The fly ash or ground granulated blast furnace slag is to be added to the concrete by methods and equipment approved by the Engineer, capable of uniformly distributing the materials throughout the mix.
3. The fly ash or ground granulated blast furnace slag may be weighed cumulatively in the weigh hopper with the cement, provided the cement is added first. The temperature of the fly ash or the ground granulated blast furnace slag is not to exceed 160° F(71° C) at the time of introduction to the mix.
4. The mix shall be closely monitored to maintain a consistent air content between 3%and 8%.

Additional testing may be required to verify desired properties of Portland cement concrete with fly ash or ground granulated blast furnace slag. Additional compensation for the expense and/or lost production due to the additional testing will not be allowed the Contractor. The following are examples of additional testing that may be required:

1. Additional air test as felt necessary by the Engineer to monitor the entrained air due to fluctuations in LOI and fineness of the fly ash or ground granulated blast furnace slag material.
2. Additional compressive test specimens may be needed to determine strengths for form removal due to the slowed strength development inherent with fly ash or ground granulated blast furnace slag concrete.

Design of Portland cement concrete with Type I cement modified by the addition of fly ash or ground granulated blast furnace slag. The following table indicates that maximum cement replacement rates (by weight) and minimum substitution ratios(by weight) for the type of modifier specified:

Modifier	Cement Replacement Rate(Maximum)% (by weight)	Minimum Modifier Cement Substitution Rates (by weight)
Ground Granulated Blast Furnace Slag(GGBFS) (grade 100 or 120)	35.0	1:1
Class "F" Fly Ash	20.0	1:1
Class "C" Fly Ash	25.0	1:1

Ternary cementitious mixtures (mixtures with portland cement, GGBFS, and fly ash) will be allowed for Class CP Concrete provided that the minimum portland cement content is 50%. The maximum amount of fly ash substitution in a ternary blend will be 20%. Substitution rates will be at a 1:1 ratio.

Any request for a change in source of materials or admixtures from the original mix design must be made in writing to the Regional Materials and Tests Engineer explaining the necessity for the change and must be accompanied by a new mix design in accordance with the above provisions. No concrete shall be placed until the new design is approved.

When requested by the Contractor and approved by the Engineer, Class A Concrete for structures, as provided for under **Section 604** and herein modified, will be permitted for use in variable width sections, ramps, and on projects containing 10,000 yd^2(m^2) of concrete pavement or less. The slumpshall be modified to be a maximum of 3 in.(75 mm) and the compressive strength of cylindrical specimens molded, cured and tested in an approved laboratory shall be not less than 3,000 psi(20.7 MPa) in 28 days. No additional payment will be made to the Contractor for increased costs due to the use of the above mixture.

The mix proportions approved by the Department shall govern during the progress of the work, except the Contractor shall make the following adjustments with the approval of the Engineer:

(a) If the cement content of the concrete varies by more than 2% from the designated value, as determined by AASHTO T 121, the proportions will be so adjusted as to maintain a cement content which does not vary more than 2% from the designated value.
(b) If it is found impossible to obtain concrete of the desired plasticity and workability with the proportions originally designed, changes will be made in aggregate weights as required, provided that in no case shall the cement content originally designated be changed except as provided in paragraphs (c), (d) and (e).
(c) If it is found impossible to produce concrete having the required consistency without exceeding the maximum allowable water-cement ratio specified, the cement content shall be increased so that the maximum allowable water-cement ratio will not be exceeded.

(d) If for any reason the concrete must be placed by hand methods and the water-cement ratio established for the vibrated concrete cannot be maintained, the mix proportions shall be adjusted for placement by hand methods and the cement proportion increased by 38 lbs per cubic yard(22 kgs per m3), or more if necessary in order to maintain the water-cement ratio established for the vibrated concrete. No additional payment will be made to the Contractor for the cost of the additional cement.

(e) Change the mix proportions because of a change in the character or source of materials.

(f) Change the mix proportions or mixing procedure in order to maintain the air content within the specified limits.

(g) Change the mix proportions made necessary by the use of retarders or other chemical additives that may be required or approved.

B. Quality Control and Acceptance of Concrete:

It shall be the responsibility of the Contractor to determine and measure the batch quantities of all ingredients (including all water and any specified or approved admixtures) for all concrete produced for the project and to mix, deliver and place the concrete so that the concrete meets the requirements of these specifications. The minimum size of a batch shall be 2.5 cubic yards(2.0 m^3). Sampling, testing and inspection for process control of the concrete at the concrete plant shall be performed by a TDOT Class 2 or higher concrete plant technician certified by the Department. This technician must be present at the concrete plant during all batching operations for the project and his primary responsibility during production shall be process control. Sampling, testing and inspection for process control of the concrete at the placement site shall be performed by a concrete technician that holds a TDOT Class 1, ACI Class 1, or higher certification. A technician shall be present at each placement site during all concrete placement. All necessary equipment required for process control shall be furnished by the Contractor and shall be at the plant and at the placement site at all times during concrete placement. Process control shall include, but not be limited to, the following tests and inspections:

1. Test to determine aggregate gradations (AASHTO T 27 with AASHTO T 11 when required).
2. Frequent inspections of the stockpile to ascertain that stockpiles are being maintained in an uncontaminated and unsegregated manner. A current aggregate quality report shall be kept at the plant.
3. Calibration of weighing systems, water meters and admixture dispensing systems prior to starting production.
4. Assurance of accurate weighing of the aggregates and cement, the proper metering of water and admixtures and the quality of water.
5. Assurance that mixing equipment is in proper working condition and the proper mixing speeds and revolutions are controlled as required by the specifications and the Materials and Tests Circular Letter File book.
6. Adjustment of mix proportions due to moisture content of both coarse and fine aggregates (moisture determination to be in accordance with AASHTO T 255).
7. Slump (AASHTO T 119) and Air Test (AASHTO T 152).

8. Yield test (AASHTO T 121) (When yield varies more than ±2% from that shown on the design. All batching operations shall cease until the problem has been identified and corrected or a new concrete design has been obtained.
9. Quality control cylinders and early break cylinders (7-14 day, etc), for compression tests in accordance with AASHTO T 22.
10. Tests for concrete and ambient air temperatures.
11. A report furnished daily to the Engineer showing all pertinent information (Date, Contract and Project, Item number(s), batch weights, moisture corrections, admixtures, slump, air content, temperatures, etc.). A sample daily report will be given to the Contractor as an example.
12. A concrete delivery ticket must accompany each load to the placement site. The ticket shall at a minimum include the following:

    Date
    Contract number
    County
    Class of concrete
    Concrete design number
    Number of cubic yards
    Load number
    Truck number
    Maximum water allowed by design
    Total water added at the plant
    Maximum water allowed to be added on the project
    Actual water added on project
    Number of revolutions at mixing speed at plant
    Number of revolutions at mixing speed at project
    Time loaded
    Time discharged
    Actual and target batch weights of each component including each aggregate, chemical admixture and mineral admixture used.

The Contractor shall develop for approval of the Engineer and maintain at the plant written procedures for sampling, testing and inspection of the concrete. The Contractor shall keep a record of all tests and inspections performed at the plant site and placement site, and this documentation, together with a certification by the Contractor that the concrete incorporated in the work meets the requirements of the specifications, shall be delivered to the Engineer upon completion of the project for inclusion in the project records. Records shall be kept current and shall be made available to the Engineer for review at any time.

It shall be the responsibility of the Contractor to properly make, cure and transport all early break cylinders (7-14 day, etc.) in accordance with AASHTO T 23 and delivered to the Regional laboratory or other established satellite laboratories for tests.

The Department or their representative shall be responsible for performing all acceptance tests. A TDOT Level 1 Certified or ACI Certified Technician shall sample, test air content and slump, and prepare 28 day cylinders for acceptance. The Department shall also be responsible for properly curing and transporting all acceptance cylinders in accordance with AASHTO T 23.

All independent assurance sampling and testing shall be performed by the Department. All sampling and testing for acceptance and independent assurance shall be at the frequencies established in TDOT Procedures. The time and location for obtaining all acceptance and assurance samples will be determined by the Department.

It shall be the responsibility of the Contractor to provide cylinder molds, a wheelbarrow, and provide a level site to perform testing and for initial curing. The Contractor shall also provide a secure storage shed/building for temporary storage of concrete acceptance cylinders in accordance with **Subsection 722.09** of these Specifications.

A TDOT certified class 2 or higher concrete technician, whose duty is process control, shall be at the ready-mix plant during all batching operations. A TDOT or ACI certified class 1 or higher technician is not required to be at the placement site during all small quantity placing operations but is required to perform one complete set of tests during the life of the project. A delivery ticket must accompany each load delivered to the job site.

Batch weights shall be corrected to compensate for any surface moisture on the aggregate at the time of use. The Contractor may elect to withhold some of the water from the mix at the plant provided the delivery ticket indicates the amount of water withheld. If a portion of the water is withheld at the plant, additional water may be added at the work site provided the design water/cement ratio of the mix is not exceeded.

Subsection 501.09, Revise the fifth paragraph to the following:

The tolerance of the individual quantity of each cementious material shall be no less than 1% nor no more than 4% of the required weight. Aggregates shall be weighed within a tolerance of 1.5% of the required weight.

Subsection 501.17, 2nd full paragraph on page 321, Change the first sentence from "When the pavement being constructed abuts an adjacent pavement" TO:

When the pavement being constructed longitudinally abuts an adjacent pavement

S T A T E **O F** **T E N N E S S E E**

(Rev. 03-23-09)
(Rev. 02-08-10)
(Rev. 12-13-10)
(Rev. 05-09-2011)
(Rev.06-25-2012)

March 1, 2006

Supplemental Specifications - Section 600

of the

Standard Specifications for Road and Bridge Construction

March 1, 2006

Subsection 602.05 (d) Paragraph one, **Change** 1125°F to 1100°F, **Change** 600°C to 593°C, **Change** the acronym, **ASSHTO** to **AASHTO**

Subsection 602.05 (d) Paragraph one, eighth sentence, and in the table below paragraph one, **Delete** the following:

Grades 70W, 100 and 100W, and **Replace** with Grades HPS70W, and HPS100W

Subsection 602.05 (d) Paragraph one, eighth sentence **Delete** "only under rigidly controlled procedures" and **Replace** with the following:

"as set forth in the **AASHTO** Guide Specification for Highway Bridge Fabrication with High Performance Steel", current edition and the **AASHTO** "Bridge Welding Code", current edition.

Subsection 602.05 (d) Paragraph two, first sentence, **Add** "or either"

"temperature indicating crayons, liquids, or either contact or non-contact…"

Subsection 602.05 (e) 3 First paragraph, **Delete** the first sentence and **Replace** with the following

"The heat-curving operation shall be conducted in such a manner that the temperature of the steel does not exceed 1200°F (649°C) for Grades 36, 50, 50W and HPS50W; and 1100°F (593°C) for Grades HPS70W and HPS100W as measured by temperature-indicating crayons or other suitable means."

Section 602.17 Delete all references to **AASHTO M 253 (ASTM A 490**) bolts unless otherwise noted on the plans.

Subsection 602.17 (D) Delete the first sentence and replace with the following

"The following provisions apply when high strength bolts are installed in the field or shop."

Table 602.17 A-BOLT TENSION, page 352 Delete the table conversion values for kilograms

Replace with (Newton) values

TABLE 602.17A-BOLT TENSION Minimum Bolt Tension (1) in Pounds (Newton)		
Bolt Size in inches(mm)	**AASHTO M 164** (**ASTM A 325**) Bolts	**AASHTO M 253** (**ASTM A 490**) Bolts
1/2(13 mm)	12,000(53,379)	15,000(66,723)
5/8(16 mm)	19,000(84,516)	24,000(106,757)
3/4(19 mm)	28,000(124,550)	35,000(155,688)
7/8(22 mm)	39,000(173,481)	49,000(217,963)
1(25 mm)	51,000(226,859)	64,000(284,686)
1-1/8(28 mm)	56,000(249,100)	80,000(355,858)
1-1/4(32 mm)	71,000(315,824)	102,000(453,719)
1-3/8(35 mm)	85,000(378,099)	121,000(538,235)
1-1/2(38 mm)	103,000(458,167)	148,000(658,337)

Subsection 602.17(E) 1 b7 Change "bolt diameter", and "(kips) number", in the table

"(in) 1-1/6 to 1-1/2", "(kips) 42 to 45"

Subsection 602.17(E) 2(a) 2. Change "16mm" to "1.6mm"

Subsection 602.17(E) 2 (b) 5. Change some information in table

1/2 rotation: **Change** "≥ 8 x" to, "≤ 8 x bolt dia."

2/3 rotation: **Change** "≥ 8 x" to, "> 8 x but < 12 x bolt dia."

Subsection 602.17(E) 2 (b) 6. (**Change** some information in table)

Bolt Length (measured in Step 1	4 x bolt dia. or less	> 4 bolt ≤ 8 x bolt dia.	> 8 x bolt dia.
Required Rotation	2/3	1	1-1/3

Subsection 602.19-Welds. Include the following as revisions to the **AASHTO/AWS** "Bridge Welding Code"

Delete 6.1.3.4(1) and 6.1.3.4(2)

Subsection 602.19-Welds. First paragraph, page 363; **Add** the word "joint";

"Complete joint penetration groove welds…"

Subsection 602.26 (b); Replace the "**THICKNESS IN INCHES (MILLIMETERS)"** Table with the following

MINIMUM COLD-BENDING RADII				
Thickness Inches (t)	Up to 3/4	Over 3/4 to 1, incl.	Over 1 to 2, incl.	Over 2
36	1.5t	1.5t	1.5t	2.0t
50	1.5t	1.5t	2.0t	2.5t
50W	1.5t	1.5t	2.0t	2.5t
HPS70W	1.5t	1.5t	2.5t	3.0t
100	1.75t	2.25t	4.5t	5.5t
100W	1.75t	2.25t	4.5t	5.5t

Subsection 602.26 (b) Second paragraph, after the Table, **Change** "HPS100W" to "HPS70W"

and **Change** "1125°F" to "1100°C", and "607°C" to "593°C"

Subsection 602.29 First paragraph, last sentence, **Change** "56°C" to "38°C"

Subsection 602.29 Third paragraph, last sentence, **Change** the last sentence to read as follows

"The holding temperature for stress relieving **ASTM** A709 Grade HPS70W HPS100W steels shall not exceed 1100°F (593°C)."

Subsection 602.29 Fourth paragraph, first sentence, **Delete** "Section 4.4" after the wording; and **Replace** with "paragraph 3.9", **Delete** AWS D1.1 and **Replace** with **AASHTO/AWS** D1.5 "Bridge Welding Codes"

Subsection 602.35 Fifth paragraph, **Delete** reference to "Table 602.35"

Subsection 602.35 (b), **Delete** this section

Section 602.39- Add the following as the last paragraph

Shear Stud Connectors - After the beams have been erected, the contractor shall be required to attach the shear stud connectors in compliance with OSHA standards. The studs shall be installed in the locations shown in the plans. The contractor will be required to install and test shear studs in accordance with the latest version of AASHTO/AWS D1.5M/D1.5, Chapter 7 Stud Welding. The surface receiving the studs shall be cleaned by shot blasting or grinding to a bright metal surface immediately prior to welding. All studs shall be welded using automatically timed stud welding equipment only. At the beginning of each day or shift each individual welder/operator and equipment must complete the Production Control/ Pre-production testing as stated in section 7.7.1. Only individuals who repeatedly demonstrate satisfactory installation shall be allowed to install the shear studs. The contractor is responsible for the quality of all welds.

The Department shall inspect and randomly test the welds before any reinforcing steel is placed.

Subsection 602.41 Last sentence, **Add** the wording "Plans and"

"in accordance with **Subsection 105.02**, Plans and Working Drawings."

602.41 Replace entire subsection with the following:

602.41-Temporary Supports. Temporary supports for steel beam erection shall be properly designed, constructed and maintained to support the loads to which they will be subjected. The Contractor shall prepare and submit to the Engineer construction drawings for temporary supports and working drawings for changes in any existing structure necessary for safely maintaining traffic, in accordance with Subsection 105.02, Plans and Working Drawings.

Subsection 602.42 Add " and stamped" after "prepared" in the first sentence.

Subsection 602.43 (a) Change the third sentence to read as follows:

"In no case shall the maximum temperature of the **ASTM** A 709 Grade HPS100W, and the HPS70Wsteels exceed 1100°F (593°C)."

Subsection 602.43 (a) Add the following to the end of the first paragraph;

"or infrared thermometers (conductor or non-conductor)

Subsection 602.43 (b) Add the wording "HPS70W, and HPS100W," after the word "Grade"

Subsection 602.47 (d) Delete the second sentence of the second paragraph, and **replace** with the following;

"When the contractor has approval to drill holes for setting anchor bolts, the bolts shall be set accurately, and fixed by completely filling the holes with grout meeting the requirements of **Subsection 918.21**."

Subsection 602.49 (d) Add metric equivalents in (kg)

Weight per 100 Bolts, pounds (kg)
19.7 (8.9)
31.7 (14.4)
52.4 (23.8)
80.4 (36.5)
116.7 (52.9)
165.1 (74.9)
212.0 (96.2)
280.0 (127.0)
340.0 (154.2)

(e) Add metric equivalents in (kg/m)

Pounds per Linear Foot (kg/m)
0.20 (0.30)
0.25 (0.37)
0.35 (0.52)
0.55 (0.82)
0.80 (1.19)
1.10 (1.64)
1.50 (2.23)
2.00 (2.98)

Subsection 602.50 (a) Change the name of section (a) to read as follows

(a) Structural Steel – Per Pound (Kilogram)

Section 603, Second paragraph, **Revise** the first sentence by adding the following:

"Effective Lettings after January 01, 2007," All contractors or subcontractors…

Subsection 604.02 Revise entire subsection as follows:

604.02-Materials. Materials used in this construction shall meet the requirements of the following sections or Subsections of Division III, Materials, of these Specifications.

Material	Section or Subsection
Water	**918.01**
Hydraulic cement[1]	**901.01**
Fine Aggregate, (all Classes of concrete)	**903.01**
Coarse Aggregate	
For Class A Concrete: Size No. 57	**903.03**
For Class D Concrete: Size No. 57	**903.03**
For Class L Concrete	**903.19**
Fly Ash	**918.31**
Ground Granulated Blast Furnace Slag	**918.32**
Cement Concrete Curing Materials	**913**
Air-Entraining Admixtures	**918.09**
Steel Bar Reinforcement	**907.01**
Welded Steel Wire Fabric	**907.03**
Waterstops	**918.11**
Joint Filler, Preformed Type	**905.01**
Structural Steel	**908.01**

[1]Type I, Type I-SM or Type I cement with either fly ash and/or ground granulated blast furnace slag as a partial cement replacement shall be used unless otherwise specified or permitted. When Type I cement with either fly ash and/or ground granulated blast furnace slag as a partial cement replacement is used, the requirements of **Subsection 604.03** shall apply.

Applied Texture Finish	**918.30**
Steel Castings	**908.05**
Elastomeric Bearing Pads	**908.12**
Bronze Bearing Plates, Plain	**908.09**
Bronze Bearing Plates, Self-Lubricating	**908.10**
Paints	**910**
Chemical Additives for Concrete	**918.09**
Gray Iron Castings	**908.07**
Permanent Steel Bridge Deck Forms	**908.03**
Precast Prestressed Bridge Deck Panels	**918.29**
Precast Concrete Box Culverts	**914.08**

Fly ash or ground granulated blast furnace slag of different classes or sources used as partial replacement for Portland cement in concrete mixes will not be permitted. FlyAsh or Ground Granulated Blast Furnace Slag shall only be permitted as a partial cement replacement in Type I Portland Cement. A maximum of 20% fly ash shall be permitted as a partial hydraulic cement replacement in Type I-SM cement only in Class A concrete.

Concrete with fly ash as a partial cement replacement shall not be produced until the concrete supplier furnishes the following information to the Engineer:

1. Copies of the results of all tests performed by the fly ash producer within the previous 30 days, on shipments to the concrete supplier showing:

   Fineness (percent retained on the No. 325(45μm) sieve)
   LOI (loss on ignition)
   Specific gravity
   Soundness (autoclave expansion)
   Moisture content
   Pozzuolanic activity, 7 day cement

2. A notarized certification from the fly ash producer stating that the fly ash meets the Departments specifications.

Concrete with ground granulated blast furnace slag as a partial cement replacement shall not be produced until the concrete supplier furnishes the following information to the Engineer:

1. Copies of the results of all tests performed by the ground granulated blast furnace slag producer within the previous 30 days on shipments to the concrete supplier showing:

   Fineness (percent retained on the No. 325(45μm) sieve.
   Air content of slag mortar
   Individual sample slag activity index (percent)
   Specific gravity
   Sulfide sulfur(s) (percent)
   Sulfate ion reported as SO_3 (percent)
   Total alkalies (Na_2O+0.658K_2O)
   Compressive strength (28 day)

2. A notarized certification from the ground granulated blast furnace slag producer stating that the slag meets the Departments specifications.

Unless otherwise indicated on the plans, the Contractor may substitute precast reinforced box sections meeting the requirements of Subsection 914.08, AASHTO specifications for all fill heights for cast in place concrete box sections. The Contractor is only required to notify the project engineer and the Division of Structures that he intends to utilize sections fabricated to the appropriate AASHTO Materials Specifications or the other pre-approved sections contained in the Division of Structures Standard Drawings for Precast Boxes. Should he elect to construct precast boxes of a different design, the Contractor shall submit shop drawings of the proposed precast box section and design calculations to the Structures Division for approval prior to construction. As a minimum, the shop drawings shall include a plan and elevation view of the box culvert showing all precast sections, a typical precast box section showing dimensions and reinforcing, and notes and details required for construction. After securing the necessary approval, the Contractor shall furnish the Structures Division a permanent, 100 µm(4 mil) mylar reproducible of the design for their file. The Contractor will be paid for the precast box based on the price bid for the quantity of the items in the cast in place structure it replaces. The precast reinforced box sections shall be manufactured in accordance with Departmental procedures

Subsection 604.03 Remove and Replace entire subsection with the following:

604.03-Classification Proportioning and Quality Assurance of Concrete.

(a) Classification and Proportioning and Quality Assurance

Min. 28 Day Comp.Strength PSI (MPa)	Min. lbs. (kg) Cement per C.Y. (C.M..)	Maximum Water/Cem. lb/lb (kg/kg)	Air Content % (Design± production tolerance)	Slump in. (mm)
	CLASS A CONCRETE			
3,000 (20.7)	564 (335)	0.45	6 ± 2	3 ± 1[1] (75 ± 25)
	CLASS D CONCRETE[2&3]			
4,000 (27.6)	620 (368)	0.40	7[3]	8 max[4] (200 max.)
	CLASS L CONCRETE[5&3]			
4,000 (27.6)	620 (368)	0.40	7[3]	8 max[4] (200 max.)
	CLASS S (SEAL) CONCRETE[6]			
3,000 (20.7)	682 (405)	0.47	6 ± 2	6±2 (150 ± 50)

The proportioning of the concrete shall be based on a predetermined minimum cement content, and the water-cement ratio shall not exceed the maximum shown in the above table. Below this limit, the quantity of water shall be adjusted to meet the slump requirements. The fine aggregate shall not exceed 44% by volume calculation of the total aggregate with the exception of slip formed Class A concrete incorporated into parapets and median barriers. For slip formed parapet and median barriers exclusively, the percentages of fine and coarse aggregate in an approved concrete mix design may be adjusted ± 2%, such that the maximum percent by volume of fine aggregate does not exceed 46%. Mixture adjustments shall be documented in the field book and daily concrete report. Adjusted mix shall comply with all performance criteria specified in **Section 604**.

---

[1] For slip forming, the slump shall range from 0 to 3 inches.

[2] Class D concrete shall be used in all bridge decks except box and slab type structures unless otherwise noted on the plans.

[3] Class D and Class L concrete shall be designed at 7% air content, acceptance range for pumping and other methods of placement is 5.5-8.5%. Sampling will be at the truck chute.

[4] Water reducing admixtures are acceptable, however, the maximum water/cement ratio shall not be exceeded in order to achieve the required slump.

[5] The unit weight of air dried Class L Concrete (lightweight concrete) shall not exceed 115 lbs./c.f. (185 kgs/0.1 m^2) as determined by ASTM C 567.

[6] The Use of Fly Ash as a cement replacement will be allowed in Class S (Seal) concrete.

Chemical Admixtures shall be included in the concrete mixture as specified in the following table based on the ambient air temperature and expected weather conditions.

Class of Concrete	Temperature less than 85°F (30°C) and falling	Temperature 85°F (30°C) or greater and rising
A	Type A or F	Type D or G or A and B
D	Type A or F	Type A or F and B or G
L	Type F	Type F and B or G
S	Type D or G or A and B	Type D or G or A and B

If a Type A, F, or G water reducer is used, then the allowable slump shall be maximum of 8 in. (200 mm).

Admixtures to be incorporated into the concrete shall all be from the same manufacturer, shall be compatible, and shall be incorporated into the concrete in accordance with the manufacturer's recommendations.

The fine aggregate in all Class L Concrete shall be natural sand conforming to the requirements of **Subsection 903.01.**

Fine aggregate manufactured from limestone or other polishing aggregates will not be permitted in concrete to be used as a riding surface in traffic lanes.

The Contractor shall submit the proposed concrete design to the Engineer for approval. The design shall be determined using saturated surface dry aggregate weights and shall be determined by the use of trial batches meeting the requirements of these specifications. The concrete design shall be prepared by a TDOT certified Class 3 concrete technician or approved independent testing laboratory under the direction of a registered civil Engineer licensed by the STATE OF TENNESSEE. The concrete plant technician or the civil Engineer shall certify that the information contained on the design is correct and is the result of information gained from the trial batches. The concrete design shall produce an average compressive strength to indicate that the specified 28 day strength can be obtained in the field. All strength determinations shall be made on equipment meeting the requirements of and in the manner prescribed by AASHTO T 22. It is the contractor's responsibility to provide concrete of the design strength specified in all applicable special provisions, plans, and/or standard specifications. Trial batches for design shall be built no more than 90 days prior to the design submittal. All cost of concrete design, preparation and submittal shall be the responsibility of the Contractor.

The proposed concrete design submittal shall contain as a minimum, the following:

Source of all aggregates
Brand and type of cement
Source and class of fly ash (if used)
Source and grade of ground granulated blast furnace slag (if used)
Specific gravity of cement

Specific gravity of the fly ash (if used)
Specific gravity of the ground granulated blast furnace slag (if used)
Admixtures (if used)
Gradations of aggregates
Specific gravity of aggregates (saturated surface dry)
Air content (if air entrainment is used)
Percentage of fine aggregate of the total aggregate (by volume)
Slump
Weight per c.y. (m^3)
Yield
Temperature of plastic concrete
Water/cement ratio lb/lb (kg/kg)
7 day compressive strength [minimum of 3 x 6-in. x12in. (150mm x 300mm) cylinders]
14 day compressive strength (minimum of 3-6 in.x 12 in. (150 mm x 300 mm) cylinders
28 day compressive strength (minimum of 3-6 in.x 12 in. (150mm x 300mm) cylinders
Weight of each material required to produce a c.y. (m^3) of concrete

In lieu of the above mix design submittal, the Contractor may submit for approval an existing design approved by the Department within the current calendar year. The approval of this concrete design submittal will not relieve the Contractor of the responsibility of providing concrete meeting the requirements of these specifications. A temporary mix design may be issued if the 7 day compressive strengths exceed the required 28 day strengths.

Any request for a change in source of materials or admixtures from the original mix design must be made in writing to the Regional Materials and Tests Engineer explaining the necessity for the change and must be accompanied by a new mix design in accordance with the above provisions. The Contractor shall place no concrete until the new design is approved.

Concrete with fly ash or ground granulated blast furnace slag as a partial cement replacement will not be used in concrete when high early strength is specified. When the Contractor elects to replace a portion of hydraulic cement with fly ash or ground granulated blast furnace slag, the following requirements must be verified prior to producing any concrete:

1. Fly ash or ground granulated blast furnace slag shall be stored in silos separate from each other and separate from the hydraulic cement.
2. The fly ash or ground granulated blast furnace slag is to be added to the concrete by methods and equipment approved by the Engineer, capable of uniformly distributing the materials throughout the mix.
3. The fly ash or ground granulated blast furnace slag may be weighed cumulatively in the weigh hopper with the cement, provided the cement is added first. The temperature of the fly ash or the ground granulated blast furnace slag is not to exceed 160° F(71° C) at the time of introduction to the mix.

Design of Portland cement concrete with Type I cement modified by the addition of fly ash and/or ground granulated blast furnace slag. The following table indicates the maximum cement replacement rates(by weight) and minimum substitution ratios(by weight) for the type of modifier specified:

Modifier	**Cement Replacement Rate** (Maximum)% (by weight)	**Minimum Modifier Cement Substitution Ratio** (by weight)
Ground Granulated Blast Furnace Slag (grade 100 or 120)	35.0	1:1
Class F Fly Ash	20.0	1:1
Class C Fly Ash	25.0	1:1

Ternary cementitious mixtures (mixtures with Portland cement, ground granulated blast furnace slag, and fly ash) will be allowed for Class A Concrete provided that the minimum Portland cement content is 50%. The maximum amount of fly ash substitution in a ternary cementitious mixture will be 20%. Type I-SM cement will be allowed with ternary cementitious mixtures. When a Type I-SM cement is used, no additional slag shall be used as a partial replacement for the hydraulic cement.

(b) Quality Control and Acceptance of Concrete

It shall be the responsibility of the Contractor to determine and measure the batch quantities of all ingredients (including all water and any specified or approved admixtures) for all concrete produced for the project and to mix, deliver and place the concrete so that the concrete meets the requirements of these specifications. The minimum size of a batch shall be 2.5 c.y. (2.0 m3). The Contractor shall have a TDOT Class 2 or higher certified technician at the concrete plant during all batching operations with the primary responsibility of process control, which includes all sampling, testing and inspection of the aggregate and concrete.

The Contractor shall have a TDOT or ACI certified Class 1 or higher technician for all sampling, testing and inspection for process control of the concrete at the placement site. A technician shall be present at each placement site during all concrete placement. The technician at both the plant and job site shall be authorized to promptly correct any deficiencies in quality control within approved design parameters. All necessary equipment required for process control shall be furnished by the Contractor and shall be at the plant and at the placement site at all times during concrete and placement.

Process control shall include, but not be limited to, the following test and inspections:

1. Test to determine aggregate gradations (AASHTO T 27 with AASHTO T 11 when required).
2. Frequent inspections of the stockpile to ascertain that stockpiles are being maintained in an uncontaminated and un-segregated manner. A current aggregate quality report shall be kept at the plant.
3. Calibration of weighing systems, water meters and admixture dispensing systems prior to starting production.
4. Assurance of accurate weighing of the aggregates and cement, the proper metering of water and admixtures and the quality of water.

5. Assurance that mixing equipment is in proper working condition and the proper mixing speeds and revolutions are controlled as required by the specifications and the Materials and Tests Circular Letter File book.
6. Adjustment of mix proportions due to moisture content of both coarse and fine aggregates (moisture determination to be in accordance with AASHTO T 255).
7. Slump (AASHTO T 119) and Air Test (AASHTO T 152 - AASHTO T 196 required for concrete containing light weight aggregate).
8. Yield test (AASHTO T 121) (When yield varies more than ±2% from that shown on the design. All batching operations shall cease until the problem has been identified and corrected or a new concrete design has been obtained.
9. Quality control cylinders and early break cylinders (7-14 day, etc) for compression tests in accordance with AASHTO T 22.
10. Tests for concrete and ambient air temperatures.
11. A report furnished daily to the Engineer showing all pertinent information (Date, Contract and Project, Item number(s), batch weights, moisture corrections, admixtures, slump, air content, temperatures, etc.). A sample daily report will be given to the Contractor as an example.
12. A concrete delivery ticket must accompany each load to the placement site. The ticket shall at a minimum include the following:

    Date
    Contract number
    County
    Class of concrete
    Concrete design number
    Number of cubic yards
    Load number
    Truck number
    Maximum water allowed by design
    Total water added at the plant
    Maximum water allowed to be added on the project
    Actual water added on project
    Number of revolutions at mixing speed at plant
    Number of revolutions at mixing speed at project
    Time loaded
    Time discharged
    Actual and target batch weights of each component including each aggregate, chemical admixture, and cementitious material used.

The Contractor shall develop for approval of the Engineer and maintain at the plant written procedures for sampling, testing and inspection of the concrete. The Contractor shall keep a record of all tests and inspections performed at the plant site and placement site and this documentation, together with a certification by the Contractor that the concrete incorporated in the work meets the requirements of the specifications, shall be delivered to the Engineer upon completion of the project for inclusion in the project records. Records shall be kept current and shall be made available to the Engineer for review at any time.

It shall be the responsibility of the Contractor to properly make, cure and transport all early break cylinders (7-14 day, etc.) in accordance with AASHTO T 23 and delivered to the Regional laboratory or other established satellite laboratories for tests.

The Department or their representative shall be responsible for performing all acceptance tests. A TDOT Level 1 Certified or ACI Certified Technician shall sample, test air content and slump, and prepare 28 day cylinders for acceptance. The Department shall also be responsible for properly curing and transporting all acceptance cylinders in accordance with AASHTO T 23.

All independent assurance sampling and testing shall be performed by the Department. All sampling and testing for acceptance and independent assurance shall be at the frequencies established in TDOT Procedures. The time and location for obtaining all acceptance and assurance samples will be determined by the Department.

It shall be the responsibility of the Contractor to provide cylinder molds, a wheelbarrow, and provide a level site to perform testing and for initial curing. The Contractor shall also provide a secure storage shed/building for temporary storage of concrete acceptance cylinders in accordance with **Subsection 722.09** of these Specifications.

An approved concrete design is required for non-critical items involving small quantities of concrete but these non-critical items may be accepted at a reduced testing frequency in accordance with TDOT Procedures. This is to be used for sidewalks, curbs and gutters, building foundations, slope paving, ditch paving, guardrail anchorages, small culvert headwalls 30 in. (750 mm) diameter or less, fence posts, catch basins, manhole bases and inlets, small sign bases and steel strain pole footings.

A qualified plant technician shall be at the ready-mix plant during all batching operations. A field technician is not required to be at the placement site during all small quantity placing operations but is required to perform one complete set of tests during the life of the project. A delivery ticket must accompany each load delivered to the job site.

Pre-approved, pre-packaged concrete mixtures may be used for the applications listed above provided the quantity does not exceed 2 c.y.(1.5 m^3) per day. No design will be required.

Batch weights shall be corrected to compensate for any surface moisture on the aggregate at the time of use. The Contractor may elect to withhold some of the water from the mix at the plant. If a portion of the water is withheld at the plant, additional water may be added at the work site provided the design water/cement ratio of the mix is not exceeded. Water added at the placement site for Class D and Class L concrete shall not exceed one (1) gallon per cubic yard. The total amount of water in the mix shall not exceed the maximum in the approved mix design. Any additional slump shall be achieved using a water reducing admixture. When the addition of water to the mix is made in the field, 30 additional revolutions at mixing speed are required.

(c) <u>High Early Strength</u>

When high early strength concrete is required, in the plans for structural or pavement repairs, or other type work, the use of Type I or Type III cement will be optional with the Contractor. If Type I cement is used, a minimum cement content of 714 lbs/c.y. (424 kgs/m^3) will be required. If Type III cement is used, a minimum cement content of 620 lbs./c.y.(368 kgs/m^3) will be required. High early strength concrete, meeting these requirements, may be substituted at the option of the Contractor for Class A concrete when approved in writing by the Engineer.

When the Contractor elects to use high early strength concrete, the source and gradation of fine and coarse aggregates shall be the same as that specified for the concrete for which the high

early strength concrete is substituted. No additional compensation will be made if the Contractor elects to substitute high early strength concrete for Class A concrete. The unit price for the class of concrete for which the substitution is made shall be full compensation for the concrete.

Subsection 604.04 Page 404, Last paragraph, last sentence

The fogger will be designed to provide a maximum VMD (volume mean diameter) of 15 (microns), and a throw distance of 60 ft. (18m).

Subsection 604.08 (4) Third sentence, **Change** "35mm" to, "#36"

Subsection 604.08 page 412 Fifth paragraph, third sentence, **Change** the word "Uncoated" to "Coated"

Section 604, All sections, after **Subsection 604.11** referencing 604 Subsections are off by one subsection. Therefore **change** them by one, see the example below.

Example: **Change "Subsection 614.12(b)"** to **"Subsection 604.11(b)"**

"Subsection 604.23" to **"Subsection 604.22"**

Subsection 604.13 Revise entire subsection to the following:

The requirements for mixing concrete shall be as prescribed in **Subsection 501.10** for major structures. However, when the concrete is mixed and transported in truck mixers, the time elapsing from when the water is added to the mix until the concrete is deposited in place at the site of the work shall not exceed 90 minutes. When the ambient air temperature exceeds 90° F(32° C), the elapsed time above shall be reduced to 60 minutes for concrete placed in bridge decks. Retempering concrete by adding water or by other means will not be permitted; however, a portion of the mixing water or chemical admixtures may be withheld from transit mixers and added at the work site if all requirements of the approved mix design are met. Water added at the placement site for Class D and Class L concrete shall not exceed one (1) gallon per cubic yard. The total amount of water in the mix shall not exceed the maximum in the approved mix design. Any additional slump shall be achieved using a water reducing admixture. In the event water or chemical admixtures are added at the placement site, the concrete shall be mixed a minimum of 30 revolutions at mixing speed after additions are made. Concrete that is not within the specified slump limits, air content limits, temperature limits or time limits at time of placement shall not be used.

For items of construction specified in **Subsection 604.11(b)**, concrete mixing may be performed by mobile volumetric measuring and mixing equipment as prescribed in **Subsection 604.04** of these Specifications.

When concrete placed in the items of construction specified in **Subsection 604.11(b)** does not exceed 25 c.y.(20 m^3) per day, it may be accepted on the basis of field testing for air, slump, and occasional strength tests with only random plant inspections as deemed necessary by the Engineer for control.

When this basis of acceptance is used, the ready-mix plant furnishing the concrete shall have been inspected and approved for use as provided in **Subsection 604.04**. In addition, the delivery ticket accompanying each load of concrete shall show the class of concrete, the quantity of

cement, aggregates, water, and additives used in the batch, and the time of batching. Materials used in the concrete shall be tested and approved.

Subsection 604.15 Delete the seventh paragraph, "If the acceptance cylinders…"

Subsection 604.16 (a) Delete the twelfth paragraph of this section, "If data collected during…"

Subsection 604.16 page 420 Second and third paragraph, **Replace** with the following:

In hot weather mitigation it will be necessary to apply a certified dry fog with a maximum VMD of 15 (microns) with a throw distance of 60 (ft.) above the concrete surface during the placement and finishing operations. The contractor shall furnish a certification to the project supervisor verifying the VMD.

In addition, immediately before the concrete is placed, the forms and reinforcing steel shall be cooled to 90° F (32° C) or less by using a fine spray of water, leaving no puddles or pockets of water. Trucks shall be sprinkled or kept in the shade when not being unloaded so as to contribute to reducing the temperature of the concrete.

Subsection 604.16 (d) Last sentence, **Change "**m^3" to "$8m^3$"

Subsection 604.16 (e) Second paragraph, second sentence, **change** "8 m" to "6 m",

Subsection 604.19. Add the following as the last sentence**:**

"Refer also to Article 107.02 regarding restrictions on loading during bridge construction"

Subsection 604.21 (d) Remove and Replace entire subsection with the following:

(d)Applied Texture Finish.

Surface preparation prior to the textured finish shall include a Class 1 Ordinary Surface Finish in accordance with Subsection 604.22(a). The concrete shall be in place a minimum of 28 days to allow for ample cure time and weathering of curing compounds prior to application of the textured finish. All surfaces shall be pressure washed just prior to application. Surfaces to be coated shall be free from efflorescence, flaking, coating, rust, dirt, oil and other foreign substances. Coatings shall be applied only to surfaces that are free of surface moisture as determined by sight and touch. Surfaces that are not to receive a Coated Finish are to be shielded and masked. Cracks over 1/8 in.(3 mm) wide are to be veed out and filled with an approved product from the TDOT QPL 13-Section B.5.Structural Materials and Components. The surface preparation shall be approved by the Engineer immediately prior to the beginning of the work.

The textured finish shall be applied in the number of coats as recommended by the manufacturer and as posted on the Departments Qualified Products List to achieve a total application rate of one (1) gallon per 45 (±5) s.f. (0.9 ± 0.1 liter per m^2). If a two coat system is used, the base coat shall be similar in color to mountain gray, **Federal Specification No. 36440,** when the final coat is White, **Federal Specification No. 37886.** When the final coat is similar in color to mountain gray, **Federal Specification No. 36440** a base coat of white, **Federal Specification No. 37886** shall be used**.** The contractor/subcontractor shall give advance notice to the Engineer of the date(s) and time(s) the texture coating is to be applied. The textured finish shall be applied with rollers or brushes so as to provide a consistent and uniform coverage. As an alternative, the Contractor may elect to spray the textured finish if he furnishes a containment system meeting the approval of the Engineer. Regardless of the method of application, drippings

and/or overspray from the texturing process shall be prohibited or otherwise contained in a manner that will not contaminate the environment.

The contractor/subcontractor shall submit to the Engineer certification of the following:

Brand name,
Production batch or lot number,
Qualified Products List Evaluation Number
Manufacturers recommended rate of application,
Materials Safety Data Sheet,
Materials Data Sheet,
Shipping date.
A color sample shall be submitted to the Engineer for approval.

Subsection 604.21 Third paragraph, sentence next to last, **Change** "**Federal Color Standard 594b",** to "**Federal Color Standard 595b"**

Subsection 604.27, Revise the first sentence under the Pavement Roughness Index Table to the following:

"In addition, all areas of pavement roughness index using a 0.1 in. (2.5 mm) blanking band represented by high points having deviations in excess of 0.4 in (10 mm) for any 25 ft. (7.6 m) section per each wheel path shall be corrected."

604.28-Loading and Opening to Traffic. Add the following as the last sentence:

"Refer also to Article 107.02 regarding restrictions on loading during bridge construction"

Subsection 604.31-Basis of Payment. Revise entire subsection to the following**:**

604.31-Basis of Payment. The accepted quantities will be paid for at the respective contract unit price per c.y.(m^3) for Class A Concrete, Class D Concrete, Class L Concrete and Class S Concrete; per lb.(kg) for Steel Bar Reinforcement and Epoxy Coated Reinforcing Steel; and per s.y.(m^2) for Scarifying bridge deck surface and Applied Texture Finish; complete in place.

The concrete fillet above fabricated bridge girders will be paid as bridge deck concrete with the quantities based on the fillet required for a conventional deck forming system. Increases in the aforementioned fillet depth to solely accommodate the Contractor's chosen deck forming system (e.g. precast deck panels) will not to be measured and paid for directly. All costs of this increase will be included in other items bid.

The accepted quantities of leveling concrete shall be paid for at 40% of the price bid for the concrete that is to go into the footing.

Any deduction in monies due to the Contractor for failure to comply with the surface rideability requirements set forth in **Subsection 604.28** shall be make on a lump sum basis.

When field conditions result in the construction of a different type of box culvert or box bridge from that established on the Plans (box type to slab type or vice versa) the respective bid price per c.y.(m^2) for Class A concrete shall be increased by 15% for constructing a slab type in lieu of box type and decreased by 13% for constructing box type in lieu of slab type. No adjustment of Steel Bar Reinforcement unit bid price is to be made for the change in box culvert or box bridge type.

Where concrete does not meet the specified strength but is allowed to be included in the permanent construction as set out in Subsection 604.20, Defective Concrete, or tardy acceptance cylinders and/or cores fail to meet the strengths specified in Subsection 604.15, the following equation shall be used to determine percent payment of contract bid price.

PP = 100-(3*Ds)
PP = Percent Payment
Ds = Percent Below Specified Strength
Ds = [(Specified Strength-Actual Strength)/Specified Strength]*100

Defective concrete greater than 25 percent below specified strength may remain in place at no cost to the Department if approved by the Department of Structures or the contractor may remove and replace.

*Payment to be based on unit price of item as bid, i.e., volume [c.y.(m^3)], length [ft.(m)], each, or other designated bid units. Payment of the above listed percentages includes cost of incidental items such as reinforcing steel when included in the price bid for the Item.

Subsection 606.04 (c) First sentence, **Change** "3(1)" to "1(3)"

Subsection 606.21 Second sentence, **Change** "o1ne" to "one"

Subsection 607.02-Materials. Remove and Replace entire subsection with the following:

607.02-Materials. Materials used in this work shall meet the following requirements:

Material	Subsection
Concrete Pipe, Reinforced	**914.02**
Corrugated Metal Pipe Culverts, Pipe Arches and Underdrains	**915.02**
Joint Mortar	**905.02**
Rubber Gaskets	**905.03**
Polyvinyl Chloride Pipe (PVC)	**914.09**
High Density Polyethylene Plastic Pipe	**914.10**

Where Pipe Culverts (Cross Drains & Median Drains) are specified they shall be in accordance with the following:

(a) Pipe Culverts (Cross Drains & Median Drains) 15 through 36 in. (375 through 900 mm) shall be one of the following:

(1) Class III, IV, or V Concrete pipe meeting the requirements of either **Subsection 914.02** or AASHTO M 86.
(2) Metal pipe meeting the requirements of **Subsection 915.02**.
(3) High Density Polyethylene pipe meeting the requirements of **Subsection 914.10**.

(4) Polyvinyl Chloride pipe meeting the requirements of **Subsection 914.09**.

(b) Pipe Culverts (Cross Drains & Median Drains) larger than 36 in. through 48 in. (900 through 1200 mm) shall be one of the following:

(1) Class III, IV, or V Concrete pipe meeting the requirements of either **Subsection 914.02**.
(2) Metal pipe meeting the requirements of **Subsection 915.02**.
(3) High Density Polyethylene pipe meeting the requirements of **Subsection 914.10**.

(c) Pipe Culverts (Cross Drains & Median Drains) larger than 48 in. (1200 mm) shall be one of the following:

(1) Class III, IV, or V Concrete pipe meeting the requirements of Subsection 914.02.
(2) Metal pipe meeting the requirements of **Subsection 915.02**.

Where Pipe Culverts (Side Drains) are specified they shall be in accordance with the following:

(a) Pipe Culverts(Side Drains) 15 through 36 in.(375 through 900 mm) shall be one of the following:

1. Class III, IV, or V Concrete pipe meeting the requirements of either Subsection 914.02 or AASHTO M 86.
2. Metal pipe meeting the requirements of Subsection 915.02.
3. High Density Polyethylene pipe meeting the requirements of Subsection 914.10.
4. PVC pipe meeting the requirements of **Subsection 914.09**

(b) Pipe Culverts(Side Drains) larger than 36 in.(900 mm) shall be one of the following:

(1) Class III, IV, or V Concrete pipe meeting the requirements of **Subsection 914.02**.
(2) Metal pipe meeting the requirements of **Subsection 915.02**.

Where Pipe Culverts (Storm Drains) are specified they shall be in accordance with the following:

(a) Pipe Culverts (Storm Drains) 15 through 36 in. (375 through 900 mm) shall be one of the following:
(1) Class III, IV, or V Concrete pipe meeting the requirements of either **Subsection 914.02** or AASHTO M 86.
(2) High Density Polyethylene pipe meeting the requirements of **Subsection 914.10.**
(3) PVC pipe meeting the requirements of **Subsection 914.09**.

(b) Pipe Culverts (Storm Drains) larger than 36 in. through 48 in. (900 through 1200 mm) shall be one of the following:
   (1) Class III, IV, or V Concrete pipe meeting the requirements of either **Subsection 914.02**.
   (2) High Density Polyethylene pipe meeting the requirements of **Subsection 914.10**.

(c) Pipe Culverts (Storm Drains) larger than 48 in. (1200 mm) shall be Class III, IV, or V Concrete pipe meeting the requirements of **Subsection 914.02**.

Where Slope Drains are specified, they shall be in accordance with one of the following:

(a) Metal pipe meeting the requirements of **Subsection 915.02.**
(b) High Density Polyethylene pipe meeting the requirements of **Subsection 914.10**.
(c) Polyvinyl Chloride pipe meeting the requirements of **Subsection 914.09**.

Materials for special end connections to other pipes or structures, required to complete the work as indicated on the Plans or directed by the Engineer shall conform to the requirements of **Section 914** and **Section 915** of the Standard Specifications, unless otherwise specified.

Reinforced concrete pipe shall be flat base, round, or oval, as shown on the Plans.

The sizes of pipe shall be identified by the nominal inside diameter. The pipe shall be of the sizes and classes or gauges stipulated in the Contract, shown on the Plans, or established by the Engineer.

Steel and aluminum pipe are considered as optional for corrugated metal pipe, pipe arches, and underdrains by the Department. The Contractor may use either option he prefers, however, in no case shall different metals or corrugations be mixed in a single line of pipe.

When paved or coated corrugated metal pipe and pipe arches are specified, either aluminum coating or bituminous coating may be used. The aluminum or bituminous coated pipe shall conform to the requirements of AASHTO M 274 or AASHTO M 190 respectively.

When precoated corrugated metal pipe and pipe arches are specified, polymer coating shall be used in accordance with **Subsection 915.03.** Coupling bands and all hardware except nuts, bolts and washers shall be of the same material and coating as the pipe.

When corrugated metal pipe arches are specified as "size equivalent round" the dimensions shall be as shown in the Plans.

Subsection 607.07-Joining Pipe. Remove and Replace entire subsection with the following:

607.07-Joining Pipe. Rigid pipe may be of bell and spigot or tongue and groove design, unless one type is specified. The method of joining pipe sections shall be such that the ends are fully entered and the inner surfaces are reasonably flush and even.

Joints for rigid pipe shall be made with: (a) portland cement mortar; (b) rubber gaskets; or (c) other types of joints recommended by the pipe manufacturer and approved by the Engineer may be permitted.

For mortar joints, the pipe ends shall be thoroughly cleaned and wetted with water before the joint is made. Stiff mortar shall then be placed in the lower half of the bell or groove of the pipe section already laid and on the upper half of the spigot or tongue of the section to be laid. The 2 pipe sections shall then be tightly joined with their inner surfaces flush and even. The inside of

the joint shall then be finished smooth and any surplus material removed from the pipe. The completed mortar joints shall be protected against rapid drying by suitable covering material.

Rubber ring gaskets shall be installed so as to form a flexible watertight seal. When other type joints are permitted, they shall be installed or constructed in accordance with the recommendations of the manufacturer.

Metal pipe shall be firmly joined by approved coupling bands.

High Density Polyethylene and Polyvinyl Chloride pipe shall meet the performance requirement for soiltightness, unless watertightness is specified. Joints shall be installed so that the connection of pipe sections, for a continuous line, will be free from irregularities in the flow line.

Pipe shall be inspected before any backfill is placed. Any pipe found to be out of alignment, unduly settled, or damaged shall be taken up and relaid or replaced.

Subsection 607.09-Backfilling. Remove and **replace** entire subsection with the following:

607.09-Backfilling. After the pipe is installed, the trench shall be backfilled in accordance with the provisions of Section 204 and the standard drawings. All pipes shall undergo visual inspection during and after installation to insure conformance to these specifications. Final visual inspections for all pipes shall be conducted no sooner than 30 days after completion of installation and final fill. Final visual inspections shall be conducted from the inlet and outlet ends of all pipe with sufficient hand held lighting to observe any defects. In addition to visual inspection, the following test shall be performed not less than 30 days following completion of pipe installation and final fill placement. All post installation inspections and test shall be observed by Department personnel.

High Density Polyethylene Pipe (HDPE Pipe) , Polyvinyl Chloride Pipe (PVC), and Corrugated Metal Pipe (CMP): The contractor shall be responsible for conducting a deflection test, (mandrel, laser, or manual), on at least 10 percent of the total number of pipe runs representing a minimum 10 percent of the total project footage including a minimum of one run of each pipe size. The Engineer shall randomly select installations to be tested to determine whether the internal diameter of the barrel has been reduced more than 5 percent. If any installation is determined to have deflected more than 5 percent, all pipe installations shall be evaluated for deflection. Documentation of station, pipe size, and deflection results shall be provided to the Engineer.

Reinforced Concrete Pipe (RCP): All RCP shall be visually inspected for deflection, alignment, cracking, and joint construction during and after installation. Any installations where visual inspections detect poor construction techniques shall be further evaluated as directed by the Engineer.

All Pipes with deflections greater than 5 percent of the nominal pipe diameter, undue misalignment, or poor joint construction shall be replaced by the Contractor at his expense. Any excavation or additional work including, but not limited to, base stone or asphalt removal and replacement, required to replace a pipe installation due to poor construction techniques shall be at the Contractor's expense. As visual and deflection test dictate, the Engineer may request additional inspections at the contractors expense.

Subsection 607.12-Method of Measurement. Remove and Replace entire subsection with the following:

607.12-Method of Measurement. Concrete pipe culverts and concrete storm sewers of the different classes, shapes, and sizes specified, will be measured by the linear foot(meter) of pipe installed and accepted. The quantity of pipe cut off, not to exceed 2 ft.(600 mm), will be paid for at the contract bid price for pipe in place.

Corrugated metal pipe, and corrugated metal structural plate pipe will be measured by the linear foot (meter) of pipe installed and accepted. Measurements will be made as follows:

(a) Metal pipe and metal structural plate pipe, with square and vertical ends or with skewed and vertical ends will be measured, in place, end to end of the metal on the centerline of the structure.
(b) Metal pipe and metal structural plate pipe, with square ends beveled, and with ends skewed and beveled, except arch pipe, will be measured, in place, by averaging the end to end distances at the top and bottom of the pipe, measured parallel to the centerline of the structure.
(c) Metal arch pipe and metal structural plate arch pipe with square ends beveled, and with ends skewed and beveled, will be measured, in place, end to end of the metal along the invert of the structure.

High Density Polyethylene pipe will be measured by the linear foot(meter) of pipe installed and accepted. The quantity of pipe cut off, not to exceed 2 ft.(600 mm), will be paid for at the contract bid price for pipe in place.

Polyvinyl Chloride pipe will be measured by the linear foot(meter) of pipe installed and accepted. The quantity of pipe cut off, not to exceed 2 ft.(600 mm), will be paid for at the contract bid price for pipe in place.

Slope Drains will be measured in the same manner as specified for corrugated metal pipe. Pipe Culverts(Side Drains) of the different sizes specified will be measured by the linear foot(meter) along the centerline of the installed pipe, except that no measurement for payment will be made in excess of the ordered length of the pipe. Pipe Culverts (Side Drains) will be ordered in increments of 2 ft.(600 mm).

Unless otherwise indicated on the Plans, no measurement of structure excavation will be made; and the costs involved shall be included in the unit prices bid for other items of construction. When the Plans provide for direct payment for structure excavation, measurement and payment will be in accordance with **Section 204**.

No payment will be made for labor and materials used in making branch connections. The length of pipe in the branch connection will be measured and included in the quantity of pipe installed in the branch line.

Strutting of corrugated metal pipe and corrugated metal structural plate pipe will not be paid for separately, but the costs thereof shall be included in the unit price bid per linear foot(meter) of pipe.

Subsection 607.13-Basis of Payment. **Revise** to include bedding and back fill as shown below:

The accepted quantities of pipe culverts and storm sewers, measured as provided for above, will be paid for at the contract unit price per linear foot(meter) for each type, class, shape, and size constructed, complete in place, including placing and compacting bedding and backfill, which price shall be full compensation for labor and materials used in making joints, and

connections to other structures; for strutting, when required, and for completing all incidentals necessary to complete the item.

Subsection 614.04 First sentence of the second paragraph. Shall read as follows:

The precast concrete deck units shall be cast in a Precast/Prestressed Concrete Institute, Catergory B-3 certified precast plant under plant control conditions, and in accordance with the TDOT procedure for the Manufacture and Acceptance of pre-cast concrete drainage structures, noise wall panels, and retaining wall panels.

The precast concrete deck units shall be cast in a certified precast plant under plant control conditions, and in accordance with the TDOT procedure for the Manufacture and Acceptance of pre-cast concrete drainage structures, noise wall panels, and retaining wall panels.

Subsection 615.01, Replace the second paragraph, first sentence with the following:

"The fabrication of these items shall be accomplished in plants that have been certified by the Precast/Prestressed Concrete Institute, Plant Certified Inspector (PCI)."

Subsection 615.02, Replace the third paragraph, first sentence with the following:

"The fabrication of precast/prestressed concrete members shall be in a Precast/Prestressed Concrete Institute category B-3 certified plant and have at each fabrication site a technician skilled in the approved pre-stressing method."

Subsection 615.05, Replace the second paragraph with the following:

"The panels shall be fabricated in a plant certified by the Precast/Prestressed Concrete Institute (PCI) category B-3."

Subsection 615.07 First paragraph, fourth sentence, **Change** "4 months" to "6 months"

Subsection 616.05 Revise the last paragraph to the following:

"Tendons shall be placed in rigid ducts after concrete placement is completed. Ducts shall be as specified on plans and in conformance with Subsection 616.07."

Subsection 619.14 Add as the second paragraph

PMC Variable Depth shall be measured by the cubic yard complete in place. The number of cubic yards will be determined by deducting the theoretical volume of Bridge Deck Overlay (PMC) from the total volume of PMC required to obtain the finished grade shown on the Plans or established by the Engineer.

Subsection 621.01 Add "and temporary shoring" after "temporary structures" in the first sentence.

Subsection 621.02 Add the following as the last paragraph:

Temporary shoring shall be used to retain the earth during grading operations and bridge construction to maintain traffic. Temporary shoring shall be installed at the locations shown on the plans or as directed by the engineer. Payment for this item will not be made when used for the installation of drainage structures, utilities, to meet OSHA regulations, or for the convenience of the contractor, unless these locations are specifically shown on the plans. The contractor shall design the temporary shoring for the specific locations and in-situ soil types. The submittal shall be in accordance with **Subsection 105.02**, shall be stamped by a Professional Engineer, and shall include detailed drawings, design calculations, and shoring material requirements. Temporary shoring may be sheet piling, piling/lagging walls, tie back walls, etc…

Subsection 621.03 Add the following as the last paragraph:

Temporary shoring will be measured and paid for by the square foot (square meter) of exposed vertical face area. The bottom of shoring for payment will be where the exposed face intersects the existing or specified grade. The top of shoring for payment will be the actual shoring top, but not more than one (1) foot above where the back of shoring intersects the existing or specified grade.

Subsection 621.04 Add the following as the last paragraph:

Payment for temporary shoring shall be full compensation for all designs, submittals, labor, tools, equipment, materials, and all other incidentals for proper installation and removal of the shoring.

Subsection 623.02 B. 2. First sentence, **Add** after "grade 50" "50S, HPS50W,"

Subsection 623.02 C. 2. Last part of the paragraph, **Add** after "Category I" "Simple Steel Bridges", SBR-1B.

S T A T E **O F** **T E N N E S S E E**

(Rev. 02-06-10) March 1, 2006
(Rev. 05-05-10)
(Rev. 12-13-10)

Supplemental Specifications - Section 700

of the

Standard Specifications for Road and Bridge Construction

701.13-Method of Measurement. Add the following as the second paragraph:

Handicap Ramps will be measured by the ft.² (m²) complete in place as specified by standard drawings. The area shall be obtained by surface measurements. Where standard widths are constructed, the measurements shall not exceed the standard widths shown on the Plans, unless approved in writing by the Engineer.

Subsection 701.14-Basis of Payment. Revise paragraph to include Handicap ramps as follows:

The accepted quantities of Concrete Sidewalk of each thickness, Handicap Ramps, and Concrete Driveway will be paid for at the contract unit price per ft.² (m^2) for the respective items, complete in place. The accepted quantities of Concrete Median Pavement will be paid for at the contract unit price per yd³. (m^3), complete in place.

Subsection 705.06: Delete the second and third paragraph, and add the following as the second, third, and fourth paragraph. Revise the bulleted section as shown below.

All post holes, dug or drilled, shall be of such size as will permit proper setting of the posts, and allow sufficient room for backfilling and tamping.

When solid rock is encountered while drilling post holes.

- Within 18 in. (460mm) of the ground surface, an oversized or elongated hole shall be drilled 24 in. (610mm) into the rock. The post shall be set at the roadside edge of the hole and the hole should be backfilled with the cutting spoils. If using wooden posts the oversized hole shall be a single hole 23 in. (580mm) in diameter or three overlapping holes 10 in. (250mm) in diameter to a length of 23 inches. For steel posts, the oversized hole shall be a single hole, 20 in. (530mm) in diameter or three overlapping holes 8 in. (203mm) in diameter to a length of 20 inches.
- Below 18 in. (460mm) of the ground surface hole shall be drilled 12 in. (300mm) into the rock or to the specified depth in Plans. The holes shall be 8 in. diameter for steel posts, and 12 in. diameter for wood posts.
- When installing end terminals using tubes, posts 1 and 2 will be installed to full depth or a minimum of 36 in. into the solid rock. The holes around the steel tube shall be backfilled with the cutting spoils.

- See approved shop drawings for additional information concerning post depth, and size of holes.

To validate proper installation of posts, each guardrail contractor/installer doing work for the Department shall have a minimum of 5 line posts and 5 terminal posts per Region per year pulled by the Department for verification of length. The Regional Construction and Materials and Tests offices may select any post for verification, but at a minimum, must select posts from five different runs of rail. If the posts are found to be in accordance with the plans and specifications, they may be re-installed if they were not damaged during the pulling process. If the post length is found to be deficient, the contractor/installer shall be required to remove the entire run of guardrail or end terminal and replace it properly at his expense.

Subsection 705.10: Add to the end of the section

When no contract unit price has been established for drilling or boring in solid rock, for posts, while placing Single Guardrail, payment for each hole shall be made at a rate equal to 2.0 times the contract unit price for Single Guardrail.

While drilling or boring into solid rock for posts placed in conjunction with Guardrail at Bridge Ends, Parapets, Piers, Concrete Endposts, and other similar edifice, payment shall be made at a rate equal to 1.25 times the contract unit price per hole.

When no unit price has been established for drilling or boring into solid rock for End Terminals posts, payment shall be made at a rate equal to 2.0 times the contract unit price for single guardrail per hole.

Unless posts are driven to refusal in solid rock, prior to drilling or boring, no additional payment will be made for drilling or boring for the placement of posts.

Subsection 709.01, Revise entire subsection to the following:

709.01-Description. Riprap shall consist of furnishing and setting or placing, rubble stones, crushed stone, sacked sand-cement, machined riprap, and embedded riprap. Slope Pavement shall consist of the construction of a reinforced concrete mat on prepared slopes. The riprap and slope pavement shall be constructed within reasonably close conformity to the lines, grades, and cross sections, and at the locations indicated on the Plans or as directed by the Engineer, and in conformity with the requirements and provisions of these Specifications.

Subsection 709.02, Revise entire subsection to the following:

709.02-Materials. Materials used in the construction of riprap and slope pavement, in addition to meeting the general requirements of these Specifications, shall conform to the following:

(a) Rubble-stone Riprap shall consist of stone or broken Class "A" or paving concrete meeting the requirements of **Subsection 918.10**. In addition, at least 80% of the stone shall have a minimum dimension of 10 in.(250 mm). The remainder shall be 2 to 4 in.(50 to 100 mm), and shall be approximately rectangular and/or trapezoidal in shape. Broken Class "A" or paving concrete shall be free of steel and wire fabric reinforcement. Sand for rubble-stone riprap(grouted) shall meet the requirements of **Subsection 903.01** or **903.02**. Cement for rubble-stone riprap(grouted) shall meet the requirements of **Subsection 901.01**.

((b)Sand for sacked sand-cement riprap shall be manufactured or natural sand and shall meet the quality requirements of **Subsection 903.01** or **903.02**. Cement for sacked sand-cement shall meet the requirements of **Subsection 901.01**. Sacks shall be of either cotton or jute, standard grade of cloth, which will hold the sand-cement mixture without leakage during handling and tamping. They shall be strong and shall be sized to hold approximately 1 c.f.(0.03 mm^3).

(c) Reinforced concrete slope pavement shall be composed of Class A concrete meeting the requirements of **Subsection 604.03** and steel reinforcement meeting the requirements of **Subsection 907.01** or **907.03**, whichever is specified. Preformed expansion joint filler shall meet the requirements of **Subsection 905.01**.

(d) Concrete curing materials shall meet the requirements of Sec**tion 913**.

(e) Machined Riprap shall be clean shot rock essentially free of sand, dust or organic materials and shall be the size designated for the class specified. The stone shall be uniformly distributed throughout the size range. The thickness of the stone layer shall be that designated for the specified class herein unless otherwise noted on the Plans. Sensitive areas of the project as indicated on project plans, project permits, and/or designated by the Engineer requiring washed and/or clean rock will be provide by the contractor at no additional cost to the project. Washed and/or clean rock must be approved by Engineer prior to placement in environmentally sensitive areas.

When rock or stone is used as riprap, the material when subjected to five alternations of the sodium sulfate soundness test (**AASHTO T 104**), shall not have a weighted percentage of loss of more than 12. The material shall be approved by the Engineer before use.

Subsection 709.08: Second paragraph, **Change** "sawed for a depth of 1 ft." to "1 in."

Subsection 709.09, Revise entire subsection to the following:

709.09-Machined Riprap. The Contractor shall exercise care in the preparation of the riprap subgrade to insure that no reduction in the design waterway occurs. No riprap is to be placed until the final subgrade elevation has been verified by the Engineer. When deemed necessary by the Engineer, the riprap shall be rolled down with metal tracked equipment to provide a more dense stone mass with final contours in reasonable conformance to the plans. Placement of the super-structure shall not proceed until the final elevation of the riprap has been accepted by the Engineer.

Upon completion of the work, visual inspection shall reveal that approximately 50% of the surface area consists of stones no smaller than 1/2 of the maximum size specified.

The material shall be dumped and placed by the use of appropriate power equipment in a manner that will produce a surface uniform in appearance. Hand work may be required to correct irregularities.

The Contractor shall exercise care in the preparation of the site referring to erosion control in accordance with the provisions in Subsection 209 and channel excavation in accordance with the provision of Subsections 203.02(c). When required by project plans, permits, or as directed by the engineer, embedded riprap in streams, conveyances, diversions, or other sensitive areas shall be properly tamped into the subsurface or otherwise blended into the substrate. Care is to be taken so that water flows over the embedded riprap and that flow is not lost below and/or within

the rock. If clean rock is required by the project plans, permit, or directed by the engineer, the rock shall meet the provisions of Subsection 709.02 for clean rock.

Subsection 712.01: Add to the end of paragraph 1.

This work shall include both installing additional devices as necessary in construction work zones.

Subsection 712.04: Remove entire subsection text and replace with the following:

General. At the Pre-construction Conference the Contractor shall designate a responsible person who will be assigned to the project to supervise traffic control.

Signs shall be erected in a workmanlike manner such that all supports are plumb, sign panels generally perpendicular to the travelway and legends horizontal so that they effectively convey the intended message. Advanced warning signs shall not be displayed more than 48 hours before physical construction begins. Signs may be erected up to 1 week before needed, if the sign face is fully covered, in a manner approved by the Engineer. The sheeting of the sign shall be free of any damage that would reduce the reflectivity. The use of overlay plates on signs is prohibited. Signs shall be mounted on stationary or portable supports dependent on the type work being performed. Sign supports shall be driven a minimum of 3.5 ft. (1 m) into soil or 1 ft. (300 mm) into solid rock. Where soil and solid rock are both encountered, the depth of the sign support in the ground shall be:

$d1 + 3.33d2 = 1$, where
$(d1 + 3.5d2 = 42)$
$d1$ = depth in m (in.) of support in soil
$d2$ = depth in m (in.) of support in solid rock

Stationary sign supports may be spliced, provided the splice is a minimum of 18 in.(450 mm). In addition, the stubs for the splice shall be driven as required above and shall not extend above 18 in.(450 mm) from ground level. The splice shall be fastened with four bolts, 2 placed at each end of the splice. In general, work being performed at spot locations and of short duration will necessitate the use of portable supports properly weighted for stability.

During periods of non-use, warning signs and other devices shall be removed from the work area, covered or otherwise positioned so they do not convey their message to the traveling public and do not present a safety hazard to drivers. If covered, the covering material shall be maintained in a neat and workmanlike manner during its use. The method of covering the sign face shall not deface or damage the sheeting of the sign.

Barricades and other devices that require lighting shall be lighted, as designated by plans details or as directed by the Engineer, with the use of flashing or steady burning lights. The Contractor will be responsible for procuring and bearing the expense of a continuous power source.

Flaggers with proper attire and paddle shall be provided when necessary to safely handle traffic through the construction zone. Flaggers will be considered a general requirement of traffic control and no direct payment will be made for such.

All Uniformed Law Enforcement Officers working on TDOT projects shall have training from a Peace Officer Standards and Training (POST) certified police training academy in the State of Tennessee.

All Uniformed Law Enforcement Officers working within TDOT work zones shall have an additional 4 hours of FHWA approved work zone training by December 31, 2010. Record of this training shall be submitted to the Project Engineer.

The Flashing Arrow Board(s) shall be installed at locations shown on the Plans or as directed by the Engineer and shall comply with all requirements of the **"Manual on Uniform Traffic Control Devices for Highways and Streets"(MUTCD)**. The Contractor shall take all necessary precautions to insure that the Flashing Arrow Board(s) perform as described herein. Any Flashing Arrow Board that exhibits any type of malfunction including improper dimming shall be corrected or replaced immediately.

The Flashing Arrow Board shall be capable of displaying the following configurations:

1. Right Arrow - 10 lamps flashing in unison forming an arrow
2. Left Arrow - 10 lamps flashing in unison forming an arrow
3. Double Arrow - 5 lamps in each arrow head and 3 lamps in a common shaft all flashing in unison
4. Four Point Caution - 4 outermost corner lamps flashing in unison

The Flashing Arrow Board(s) shall be used in the single arrow mode for lane closure only and shall be situated and aligned so that the flashing arrow is clearly visible and legible. The single arrow mode display shall have 10 lamps flashing in unison. The sequential arrow configuration, chevron arrow configuration, and horizontal bar configuration will not be allowed. The flash rate shall not be less than 25 flashes per minute or more than 40 flashes per minute. Minimum lamp "on-time" shall be 50% of the cycle.

The Flashing Arrow Board(s) shall be mounted so as to provide a minimum of 7 ft.(2.1 m) between the bottom of the panel and the roadway.

Portable signs may be used when the duration of the work is less than three (3) days or as allowed by other conditions in the proposal. All portable signs and sign mounting devices utilized in work shall be **NCHRP 350** compliant. When not being used, portable signs must be removed from the clear zone. Turning signs sideways or backwards is explicitly prohibited while the signs are in the clear zone. Portable interim signs shall be mounted a minimum of one (1) foot above the level of the pavement edge and shall be mounted at the height recommended by the manufacturer's crashworthy testing requirements.

All regulatory sign blanks shall be rigid.

The Contractor shall make every effort to eliminate the use of interim signs as soon as the Work allows for the installation of permanent signs.

Existing street name signs shall be maintained at street intersections.

Any sign(s) or portions of a sign(s) that are not applicable to the traffic control plan shall be covered so as not to be visible to traffic or shall be removed from the roadway when not in use.

The Contractor shall not remove any existing signs and supports without prior approval from the Engineer. All existing signs and supports that are to be removed shall be stored and protected if this material will be required later in the work.

Interim guide, warning, or regulatory signs required to direct traffic shall be furnished, installed, reused, and maintained by the Contractor in accordance with the **MUTCD**. The bottom of all interim signs shall be mounted at least seven (7 ft.) feet above the level of the pavement edge when the signs are used for long-term stationary operations as defined by Section 6G.02 of the **MUTCD**.

Existing guide and exit directional signs on the Project shall be maintained until conditions require a change in location or legend content. When change is required, the signs shall be in accordance with the Traffic Control Plan. When an existing guide and exit directional signs sign is in conflict with work to be performed, the Contractor shall remove the conflicting sign and reset it in a new, non-conflicting location that has been approved by the engineer.

When it is not possible to utilize existing signs, either in place or relocated, the Contractor shall furnish, erect, maintain, modify, relocate, and remove new interim guide and exit directional signs in accordance with the Plans or as directed by the engineer.

The installation of new permanent guide and exit directional signs and the permanent modification or resetting of existing guide and exit directional signs, when included in the contract, shall be accomplished as soon as practical to minimize the use of interim guide and exit directional signs.

Worker Visibility and Safety. All workers within the right-of-way of a project who are exposed to either vehicular traffic or to construction equipment in the work area shall wear high-visibility safety apparel. High-visibility apparel shall be considered personal protective clothing that meets performance Class 2 or Class 3 of the ANSI/ISEA 107-2004 publication. Class 3 apparel shall be required for night work.

Portable Barrier Rail. All portable barrier rail will be placed as far away from the travel lanes as possible while serving the intended purpose. All portable barrier rail will be moved or removed as directed by the engineer. There shall be no additional payment for removing barrier that is no longer required.

Lane Closures. The length of a lane closure should be held to the minimum length required to accomplish the Work. The advanced warning signs for the project should not overlap with the advanced warning signs for lane shifts, lane closures, etc.

Drums shall be used in all transition tapers for lane closures on multi-lane roads

Night Work Lighting. When night work is required by Contract documents or plans, the Contractor shall supply sufficient lighting according to the following Specification.

The following information regarding the lighting plan must be submitted to the project supervisor:

- Descriptions and sketches of the layout of lighting devices including spacing, luminary height, lateral placement and anticipated illuminance provided.
- Photometric & physical specifications of all lighting equipment.
- Detailed description of all lighting to be used on construction equipment.
- Methods to be employed to reduce glare.
- Contractor's frequency and procedure for checking illumination levels.

In addition to their standard protective equipment, the following information regarding construction personnel and equipment shall be followed as a minimum:

1. Traffic Control Persons, all equipment operators and all other workers shall wear high-visibility apparel that meets performance Class 2 or Class 3 of the ANSI/ISEA 107-2004 publication. Class 3 apparel shall be required for night work.
2. They shall also have a minimum of 12 in^2 of reflective material added to their hard hats which is visible from all sides.
3. Traffic Control Persons must also be equipped with a flashlight complete with semi -transparent red cone.
4. All traffic control persons shall be equipped with radios or cell phones so that they have communication with each other.
5. All workers shall receive specific training on night work operations.
6. All vehicles in the work area must operate rotating or flashing incandescent amber lights visible in 360 degrees around the vehicle.
7. All work vehicles including trucks must have red and white reflective tape applied to all sides such that it defines the outline of the vehicle.

The following equipment will be outfitted with non glare balloon style lights or equivalent. The lights will be required on each piece of equipment in operation.

Equipment Type	**Illuminance Requirement**
Paver, Milling Machine, Material Transfer Devices	1- 4000 watt assembly or 2 - 2000 watts assemblies
Grader, Roller, Rumble Strip Machine, Shoulder Machine	1 – 400 watt assembly
Paint truck	1- 400 watt assembly or nonglare 300 watt floodlight assembly
Guardrail driver, stationary Operation	1- 4000 watt assembly or 2 - 2000 watts assemblies or equipment light plant
Trail Vehicle	1-4000 watt assembly or 2 - 2000 watts assemblies

(A trail vehicle will be required to follow the last piece of equipment in a mobile operation(i.e. finish roller, pavement marking, etc.) depicting the beginning of the working area. In addition, portable lighting of at least 400 watts shall be available for the density testing inspector. The illuminance requirement for other vehicles not listed will be determined by the Engineer. A 400 watt metal halide lamp or equal approved by the Engineer may be substituted for a 2000 or 400 watt balloon light assembly.)

All luminaries shall be located and directed in such a way to minimize glare to both motorists and work vehicles. If glare is noted from any travel path, the contractor must adjust the lighting to reduce the glare to an acceptable level to the satisfaction of the Engineer.

The contractor shall replace non-functioning lamps immediately. The luminary aiming shall be checked daily. The luminaries shall be cleaned regularly.

Specification Compliance. The Contractor will be notified for failure to comply with this specification or plans. The safe passage of pedestrians and traffic through and around the temporary traffic control zone, while minimizing confusion and disruption to traffic flow, shall have priority over all other Contractor activities. Continued failure of the Contractor to comply

with the requirements of the Traffic Control Standard Specification or Special Provisions will result in non-refundable deductions of monies from the Contract for non-performance of Work that the deficiency is allowed to remain, not as penalty, but as liquidated damages.

Failure of the Contractor to comply with this Specification or take immediate correction actions required within forty-eight (48) hours of written notice shall be reason for the engineer suspending all other work on the Project, except erosion prevention and sediment control and traffic control, applying non-refundable deductions of monies from the Contract at a rate of twenty-five hundred dollars ($2,500) per calendar day per notice and/or withholding payment of monies due to the Contractor for any work on the Project until traffic control deficiencies are corrected. These other actions shall be in addition to the deductions for non-performance of traffic control.

Subsection 712.05: Remove entire subsection text and replace with the following:

Pavement Marking Removal. Conflicting pavement markings must be removed to prevent confusion to vehicle operators. Pavement marking removal shall be accomplished by the Contractor in a manner acceptable to the Engineer.

Final surface pavement markings shall be removed by sand blasting, water blasting, or acceptable grinding methods that will cause the least possible damage to the pavement. Intermediate surface pavement markings shall be removed by sand blasting or water blasting, or other approved methods that will cause the least possible damage to the pavement. The following methods listed below are considered as acceptable for intermediate surface pavement markings: Sand blasting using air or water, High pressure water, steam or superheated water, or Mechanical devices such as grinders, sanders, scrapers, scarifiers, and wire brushes.

The Contractor at his expense shall repair any damage to the pavement or surface caused by pavement marking removal by methods and materials acceptable to the engineer. The end result of the removal shall not cause a condition that appears to be a line that conflicts with the current markings.

Traffic shifts that are done on the final surface shall be accomplished using interim traffic marking tape unless otherwise specified in the plans.

Removal of an existing pavement marking by painting over with black paint or asphalt will not be an acceptable method.

When the method of removal causes sand or other material to be accumulated on the pavement, the residue shall be removed as the work progresses.

Subsection 712-07 Maintenance. Revise entire subsection to the following**:**

712.07-Maintenance. The Contractor shall assume full responsibility for the continuous and expeditious maintenance of all signs, barricades, temporary impact attenuators and all other traffic control devices to meet the "acceptable" category as described in *Quality Guidelines for Temporary Traffic control Devices and Features* published by ATSSA. Such maintenance will be considered a part of the original installation cost. Failure to maintain all traffic control devices in such a manner as to provide continuous safety to the public will be cause for suspension of construction operations until proper traffic control is re-established.

Subsection 712.09: Insert the following after the sixth paragraph condition (2).

Additional relocations of barrier rail that will be relocated due to safety of work zone or traffic, as established in the traffic control plans or as directed by the engineer laterally up to 10 ft., shall be paid at ten percent (10%) of the interconnected portable barrier bid amount unless a separate item is in the proposal.

Subsection 712.10: Delete the first paragraph and replace with the following

The lump sum payment for Traffic Control shall include Temporary Workzone Lighting and all equipment, labor, materials and shall included full compensation for furnishing flaggers, traffic cones and removing conflicting and incorrect pavement markings, as required, until project completion.

Subsection 712.10: Insert the following after the second paragraph

Payment for Portable Energy Absorbing Terminals will be made at the contract price per Portable Energy Absorbing terminal, complete in place, with total payment based on the maximum number of portable energy absorbing terminals in place at one time as specified in **Subsection 712.09**.

Subsection 714.02 Revise entire subsection to the following:

714.02-Materials and Submittal Data Requirements. Materials used in this construction shall conform to the requirements of **Section 917** and to the following Sections or Subsections, unless otherwise stipulated:

Section or Material	Subsection
Gray Iron Castings	**908.07**
Portland Cement Concrete, Class	**604**
Steel Bar Reinforcement for Concrete Structures	**907.01**
Welded Steel Wire Fabric	**907.03**
Crushed Stone Grading D	**903.05**
Cement Concrete Curing Materials	**913**
Aluminum Paint	**910.04**
Conduit	**917.05 or 917.07**

Within 30 days after the issuance of the work order, the Contractor shall submit to the Engineer, four (4) collated sets of the manufacturer's descriptive literature and technical data which fully describes the types of lighting equipment he proposes to use. Descriptive literature shall include the manufacturer, models, etc. and be adequate to determine if the equipment or material meets the requirements of the Plans and these specifications. These sets of submittal data shall include a list of the materials submitted along with descriptive material for, but not limited to, the following items when applicable:

1. Complete photometric data of luminaires as published by the manufacturer with independent testing laboratory results.
2. Computer printouts showing illumination levels throughout each interchange area where high mast luminaires are to be installed.
3. General details of light standards, breakaway bases and bracket arms.
4. Highmast tower details with a set of design computation for each height including access hole, base, anchorage, head frame, and lowering device. Details are to include specification references for materials and location, type, size and extent of welds.
5. Dimension sheets and performance data on all related equipment.

The Engineer shall retain one copy and forward one copy to the Regional Materials and Test Division, one copy to the local entity (city or county engineer), and one copy to the Design Division for their review.

The submittal sets shall also include detailed scale drawings of any non-standard or special equipment and of any proposed deviation from the Plans. Any deviation from plans or specifications shall require approval from the Design Division. A letter requesting deviations or alternate materials must be included in the submittal for Design Devision approval. If requested to do so, the Contractor shall submit for approval sample articles of any materials proposed for use. The Department will not be liable for any materials purchased, labor performed, or delay to the work prior to such approval.

In addition to the above, each submittal shall include a notarized letter certifying that all lighting system materials listed in the submittal are in conformance with the Plans and Specifications. The Contractor shall also submit to the Engineer a statement from the Maintaining Agency that the system is acceptable to the Agency.

Subsection 716.02 Delete "Adhesive 918.26" from the table.

Subsection 716.03 Revise entire subsection to the following:

716.03-Thermoplastic Pavement Marking.

(a) General.

The material shall be applied to the pavement by the screed extrusion method or the ribbon dispenser method. The screed extrusion device shall have one side of the shaping die open with the other 3 sides being contained by, or being part of, suitable equipment for heating and controlling the flow of material. Ribbon dispensers shall be heated, suspended above the road surface, and shall apply the material to the width and thickness specified.

The equipment shall be constructed to provide continuous mixing and agitation of the material. Conveying parts of the equipment between the main material reservoir and the shaping die shall be so constructed as to prevent accumulation and clogging. All parts of the equipment which come in contact with the material shall be so constructed as to be easily accessible for cleaning and maintenance. The equipment shall be constructed so that all mixing and conveying parts up to and including the shaping die, maintain the material at the plastic temperature with heat transfer oil or electrical element controlled heat. Direct fire heat transfer will not be allowed.

The equipment shall be so constructed as to insure continuous uniformity in the dimensions of the stripe. The applicator shall provide a method of applying "skip" lines. The use of pans, aprons, or similar appliances which the die overruns will not be permitted under this Specification. The equipment shall be calibrated, and checked periodically by marking over a metal plate. The equipment will be so constructed as to provide for varying widths to produce varying widths of traffic markings.

Glass spheres applied to the surface of the completed stripe shall be applied by an automatic bead dispenser attached to the striping machine in such a manner that the beads are dispensed almost instantaneously upon the installed line. The glass sphere dispenser shall be capable of applying glass spheres to the surface of the completed stripe by a double drop application for initial traffic striping and marking. The bead dispenser for the first

bead drop shall be attached to the striping machine in such a manner that the beads are dispensed closely behind with the thermoplastic material. The second bead dispenser bead shall be attached to the striping machine in such a manner that the beads are dispensed immediately after the first bead drop application. Glass spheres dispensers shall be equipped with an automatic cut-off control that is synchronized with the cut-off of the thermoplastic material and applies the glass spheres in a manner such that the spheres appear uniform on the entire traffic stripes and markings surface with, 50 to 60% embedment.

Special kettle(s) shall be provided for melting and heating the thermoplastic material. The kettle(s) must be equipped with automatic thermostatic control devices so that heating can be done by controlled heat transfer rather than by direct flame, so as to provide positive temperature control and prevent over-heating of the material.

Applicators shall be mobile and maneuverable to the extent the straight line can be followed and normal curves can be made in a true arc.

The applicator equipment to be used on roadway installations shall consist of either hand equipment or truck mounted units depending on the type of marking required.

The hand equipment shall have sufficient capacity to hold 150 lbs (70 kgs) of molten material and shall be sufficiently maneuverable to install crosswalks, lane, edge, and center lines, arrows and legends. The truck mounted unit for lane, edge and center lines shall consist of a mobile self contained unit carrying its own material capable of operating at a minimum speed of 5 mph (8 kph) continuously during an 8 hour period while installing striping.

Hand equipment used for stop bars, cross walks, legends, directional arrows and other specialty markings shall use the same thermoplastic formulation as described above with the exception of placing the marking at a minimum thickness of 0.090 in. (3mm) and a single drop of AASHTO M-247-09, Type 1 bead at the rate of 8 to 10 pounds per 100 square feet {3.6 to 4.5 kg per 9.3 m2} of stripe.

As an alternate, the Contractor may apply preformed thermoplastic marking material for stop bars, cross walks, legends or directional arrows. The preformed thermoplastic material shall have a minimum thickness of 0.090 in. (3 mm) and fused to the pavement by the heat of a torch.

(b) Application.

The pavement temperature shall be a minimum of 50° F (10° C) and rising before application begins. Application shall be suspended at any time the pavement temperature falls below 50° F (10° C). All surfaces to be marked shall be thoroughly cleaned of all dust, dirt, grease, oil and all other foreign matter before application of the striping.

To insure optimum adhesion of thermoplastic applied on all Portland cement concrete pavements, the Contractor shall apply a binder-sealer material as recommended by the thermoplastic manufacturer. To insure optimum adhesion, the thermoplastic material shall be installed in a melted state at a temperature of 400 to 450° F (205 to 230° C). The material, when formed into traffic stripes, must be readily renewable by placing an overlay of new material directly over an old line of compatible material. Such new material shall bond itself to the old line in such a manner that no splitting or separation takes place.

Longitudinal lines shall be off-set at least 2 in. (50 mm) from longitudinal joints of Portland Cement Concrete pavements.

Unless specified on the plans, a minimum average film thickness of 0.100 in. (2.54 mm) for lane and edge lines shall be maintained on all markings. This is to be computed on the basis of the amount of material used each day. The film thickness shall be uniform in appearance throughout its application. The glass sphere top coating must be applied by means of a pressure type spray gun designed specifically for this purpose, and which will embed the spheres into the line surface to at least one-half their diameter.

Placement of Drop on Glass Beads AASHTO M-247-09, Type 1 and AASHTO M-247-09, Type 4 shall each be placed on the thermoplastic stripe at a rate of 8 to 10 pounds per 100 square feet {3.6 to 4.5 kg per 9.3 m2} of stripe.

The AASHTO M-247-09, Type 4 glass beads shall be placed immediately after the first bead drop application of AASHTO M-247-09, Type 1 beads.

"Regardless of the application methods and procedures, or pavement types, the Contractor will be responsible for replacing any and all pavement markings that fail to comply with these specifications or fail to adhere to the pavement for one year after installation at the Contractor's own expense."

Contractor's Responsibility for Notification.

Notify the Engineer prior to the placement of the thermoplastic materials. Furnish the Engineer with the manufacturer's name and batch numbers of the thermoplastic materials and glass spheres to be used. Ensure that the approved batch numbers appear on the thermoplastic materials and glass spheres packages.

When thermoplastic is used on the final surface, the Contractor shall have the option of using reflectorized paint installed to permanent standards at the end of each day's work and then installing the permanent marking after the paving operation is completed. Short, unmarked sections will not be allowed.

Protection of Newly Applied Traffic Stripes and Markings.

Do not allow traffic onto or permit vehicles to cross newly applied pavement markings until they are sufficiently dry. Remove and replace any portion of the pavement markings damaged by passing traffic or from any other cause, at no additional cost to the Department.

Subsection 716.04 Replace the first paragraph with the following:

716.04-Raised Reflective Pavement Markers. Markers shall be bonded to the pavement with an epoxy listed on the Departments QPL and approved by the marker manufacturer or a hot bituminous adhesive conforming to the requirements as described below. Markers manufactured with a self adhesive backing will not be allowed. Markers shall be spaced as shown on the plans but shall not be installed over joints in rigid type pavements.

Subsection 716.06: Replace with the following

The application of preformed plastic pavement markings shall be made on clean dry surfaces free of dirt and foreign matter. The pavement temperature shall be 60° F (15° C) or over. Should plastic require activators for the adhesive or various special coatings for different

pavement surfaces, the bidder shall include the cost of the activator or special coatings in the unit price of plastic bid upon.

The vendor will furnish with each package of reflectorized pavement marking materials complete instructions and/or specifications for the application of pavement marking materials to pavement surface. The reflectorized pavement marking materials are to be installed according to the vendor's specifications. Any adhesion used in the installation shall be as specified by the manufacturer. An adhesion-promoting primer shall be required when recommended by the pavement marking manufacturer.

Guides to mark the lateral location of pavement markings shall be established as shown on the plans or as directed by the Engineer. The Contractor shall establish the pavement marking guides and the Engineer will verify the location of the guides. Markings shall be placed in proper alignment with the guides. The deviation rate in alignment shall not exceed 1 inch per 200 feet of roadway. The maximum deviation shall not exceed 2 inches nor shall any deviation be abrupt.

Markings placed that are not in alignment or sequence, as shown on the plans or as stated in this specification, shall be removed and replaced by the Contractor at the Contractor's expense. Removal shall be in accordance with **Subsection 712.05,** Pavement Marking Removal. Guides placed on the roadway for alignment purposes shall not establish a permanent marking on the roadway in the opinion of the Engineer.

When markings are specified in the contract for newly paved asphalt concrete surfaces, they shall be placed immediately after final rolling of the mat. A rubber tired roller cart with a minimum weight of 200 pounds or a truck operated at no more than 3 m.p.h. shall be used to assure proper adhesion when the markings are in place. Steel wheel rollers may not be used for this purpose.

Subsection 722.09Concrete Cylinder Storage. Revise entire subsection to the following:

722.09 Concrete Cylinder Storage-The Contractor shall provide a storage shed/building for temporary storage of concrete acceptance cylinders. The storage facility shall be of sufficient size and construction to protect the concrete cylinders from the elements and damage. The storage facility location shall be approved by the Engineer and access to the storage shed/building shall be under the control of Department personnel. The storage shed shall have a concrete curing box or water curing tank with a heating/circulating system of sufficient size to properly cure all acceptance cylinders before transferring for final storage and testing. The curing box or curing tank and heater/circulator shall comply with AASHTO M-201, and proper curing of the cylinders shall be in accordance with AASHTO T-23.

SECTION 740-GEOTEXTILES. Revise heading to the following:

GEOTEXTILES AND GEOSYNTHETICS

Subsection 740.01-Description. Revise subsection to include Geosynthetics as follows:

This work shall consist of the placement of Geotextiles and Geosynthetics in accordance with these Specifications and/or Standard Drawings, at the locations and in reasonably close conformity with the lines, grades and dimensions shown on the Plans or established by the Engineer.

Subsection 740.02-Materials. Revise subsection to include Geosynthetics as follows:

Materials used in this construction shall meet the requirements of **Subsection 918.27** for the Type Geotextile or Geosynthetic called for in the plans.

The contractor shall furnish a certified laboratory test report from an approved testing laboratory with each shipment of materials. Laboratory test reports shall include the actual numerical test data obtained. All rolls shall be clearly labeled as being part of the same production run from which the test date was derived. Fabric shall be protected to prevent damage during transportation, storage, and installation. Geotextile and geosynthetic rolls shall be covered during storage to protect against UV degradation and shall be stored with rolls elevated up off of the ground. Fabric that is torn, punctured, or otherwise damaged shall not be installed.

Subsection 740.03-General. Revise subsection to include Geosynthetics as follows:

Geotextile and Geosynthetic fabric shall be placed as specified on the Plans for the specific application. The surface on which the Geotextile or Geosynthetic fabric is to be placed shall be compacted, as directed by the Engineer, and prepared as smooth as possible and free from debris, obstructions and depressions which could result in gaps, tears, or punctures in the fabric during cover operations. The Geotextile or Geosynthetic shall be installed in such a manner that placement of cover material will not excessively stretch nor tear the Geotextile or Geosynthetic. After fabric is placed, the initial lift of cover material shall be installed within five (5) calendar days. Under no circumstances shall any equipment operate directly on the Geotextile or Geosynthetic fabric. Cover material shall be placed such that at least the minimum initial lift thickness, as specified by the Engineer, is between the Geotextile or Geosynthetic and equipment tires or tracks at all times. Turning of equipment/vehicles shall not be allowed on the first lift above the Geotextile or Geosynthetic.

Subsection 740.04-Method of Measurement. Revise subsection to include Geosynthetics as follows:

Geotextiles or Geosynthetics of the type specified shall be measured by the yd^2 (m^2), complete in place. No measurement for payment will be made for overlaps, splices, sewing joints, etc.

Subsection 740.05-Basis of Payment. Revise subsection to include Geosynthetics as follows:

The accepted quantities of Geotextiles or Geosynthetics of the type specified, measured as provided for above, will be paid for at the contract unit price per yd^2.(m^2) complete in place, which price shall be full compensation for labor, equipment, materials, tools and all incidentals necessary to complete the work. Fabric that is damaged during or after placement shall be replaced or repaired, as directed by the Engineer, at the expense of the Contractor.

STATE OF TENNESSEE

(Rev. 05-05-10) March 1, 2006

Roadside Development

803.02-Sod. New sod shall consist of live, dense, well-rooted growth of permanent grasses, free from Johnson grass, nut-grass, and other undesirable grasses or weeds, well-suited for the intended purpose and for the soil in which it is to be planted. Installed sod which does not meet these requirements shall be corrected as directed by the Engineer at the Contractors expense.

(Rev. 09-01-09)
(Rev. 02-06-10)
(Rev. 12-13-10)
(Rev. 02-13-12)

March 1, 2006

Supplemental Specifications - Section 900

of the

Standard Specifications for Road and Bridge Construction

March 1, 2006

Subsection 903.03 Coarse Aggregate for Concrete, Revise the fourth paragraph to the following:

Coarse aggregate for prestressed concrete shall be Size No. 57 or Size No. 67, **Subsection 903.22,** as may be specified or directed. Coarse aggregates for precast concrete shall include any size fractions of **Subsection 903.22**, as may be specified or directed.

Subsection 903.12 (b) - Replace with the following:

(b) Aggregate for Micro-Surface. A minimum of 50% of ~~The~~ aggregate shall be crushed slag, crushed granite or crushed stone (crushed stone as specified for the types listed for Grading D in **Subsection 903.11(c)**) meeting the gradation limits below and the physical properties of ASTM D 692 except the percent of fractured pieces shall be 100. The aggregate shall have a minimum sand equivalent (AASHTO T 176) of 65. Blends of more than one aggregate source shall be mixed by means of pug mill only. Blending aggregates with a front end loader will not be permitted. The aggregate shall be proportioned to produce a uniform gradation meeting the following requirements:

GRADATION LIMITS FOR AGGREGATE
BASED ON WASH GRADATION

Design Master Range Mixture Control

Sieve	(Total Percent Passing)	Tolerances
3/8 in.(9.5 mm)	100	
No. 4(4.75 mm)	70-**98**	±6.0
No. 8(2.36 mm)	45-70	±5.0
No. 16(1.18 mm)	28-50	±5.0
No. 30(600 µm)	19-34	±4.0
No. 50(300 µm)	12-25	±4.0
No. 100(150 µm)	7-18	±2.0
No. 200(75 µm)	4-15	±2.0

Subsection 904.03 Emulsified Asphalts. Replace Entire subsection with the following:

904.03-Emulsified Asphalts. Emulsified asphalts used on TDOT projects shall only be from Certified Emulsified Asphalt Suppliers that have an approved Quality Control Plan in accordance with TDOT Standard Operating Procedures.

Two types of emulsified asphalts shall be used under these specifications, both, anionic and cationic.The manufacturer shall furnish samples of base asphalt used in the manufacture of asphalt emulsion, as directed by the Engineer.

All emulsified asphalts shall be homogeneous, and shall adhere firmly to the surface of the mineral aggregate. Failure of the emulsified asphalt to perform satisfactorily on the job shall be deemed cause for rejection, notwithstanding its ability to pass laboratory tests.

A. Anionic Emulsified Asphalts.

In general, anionic emulsified asphalts shall conform to all the requirements of AASHTO M 140, for the type and grade specified.

In addition to the classes provided for in AASHTO M 140, a special mixing material (AE-3), a special priming material (AE-P) or a special tack(TST-1P) may be specified. These special materials shall conform to the following requirements:

TYPE	**Special Mixing**		**Special Prime**		**Special Tack**	
GRADE	**AE-3**		**AE-P**		**TST-1P**	
TEST REQUIREMENTS:	***Min.***	***Max.***	***Min.***	***Max.***	***Min.***	***Max.***
Viscosity, Saybolt-Furol, 77° F(25° C), Sec.	-	-	10	50	10	75
Viscosity, Saybolt-Furol, 122° F(50° C), Sec.	50+ &Pumpable		-	-	-	-
Settlement, 5 days, %	-	5	-	5	-	5
Sieve Test, %	-	-	-	0.10	-	0.10
Stone Coating, %	90	-	-	-	-	-
Residue by distillation*, %	70	-	45	-	55	60
Oil portion of distillate, % by vol.	-	6	-	12	-	-
Tests on residue from distillation:						
Float Test, 140° F (60ºC),	20	-	20	-	-	-
Ductility, 77° F (25ºC), cm	40	-	40	-	-	-
Ductility, 40° F (4ºC), cm	-	-	-	-	10	35
Ash, by ignition, %	-	2	-	-	-	-
Demulsibility, 35 ml, 0.02 *N* $CaCl_2$, %	-	-	-	-	5	-
Elastic Recovery @ 50°F (10°C)	-	-	-	-	25	-
Penetration	-	-	-	-	75	150

*TST-1p shall be distilled at 400ºF (205ºC). AE-3 and AE-P shall be distilled at 500ºF (260ºC).

The test requirement for settlement may be waived when the emulsified asphalt (special tack coat excepted) is used in less than 5 days' time; or the Engineer may require that the settlement test be run from the time the sample is received until it is used, if the elapsed time is less than 5 days.

The AE-3 shall be of such stability that it will remain constant and uniform while being mixed with dry or approximately dry aggregate, and shall thoroughly and uniformly coat the entire surface of each fragment while being manipulated and incorporated into the work. The emulsified asphalt after being incorporated into the work shall show no signs of re-emulsifying.

B. Cationic Emulsified Asphalts.

Cationic emulsified asphalts shall conform to the requirements of AASHTO M 208, for the type and grade specified. Solubility in trichloroethylene will be required for information only every 3 months in the supplier's quality control program.

In addition to the classes provided in AASHTO M 208, a special priming material may be specified which is designated CAE-P. This material shall meet the requirements listed for AE-P except as follows:

When approved by the Engineer, cationic emulsions may be substituted for anionic emulsions.

CRS-2P emulsion shall meet the testing requirements listed for CRS-2P in Table 1 of AASHTO M 316. The requirement for ductility at 4ºC shall be waived, and the emulsion residue shall have a minimum softening point (Ring and Ball) of 125ºF (52ºC).

C. Emulsified Asphalts for Slurry Seal.

The emulsified asphalt for Emulsified Asphalt Slurry Seal shall be Type CQS-1h conforming to the requirements in AASHTO M 208 with the following exceptions:

Residue, %	MIN. 62
Cement mixing test, %	(waived)

The water shall meet the requirements of **Subsection 918.01**.

D. Emulsified Asphalts for Micro-Surface.

The emulsified asphalt for micro-surfacing shall be Type CQS-1h-p conforming to the requirements listed for CQS-1h in AASHTO M 208 with the following exceptions:

Residue, %	MIN. 62
Cement Mixing Test, %	(waived)
Ductility @ 77°F (25°C)	MIN. 70

Residue shall be obtained by distillation at 350°F (177°C)

The latex or polymer modifier and other emulsifiers shall be styrene butadiene rubber (SBR) or natural latex, and shall be milled into the asphalt cement and shall show no separation after mixing. The latex or polymer modified emulsified asphalt shall have a minimum softening point (Ring and Ball) of 135° F(57° C) when tested in accordance with AASHTO T 53. The blended asphalt mixture when combined with aggregate and mineral filler shall have the following characteristics:

1. Be capable of filling up to 1/2 in.(13 mm) wheel ruts in one pass.
2. Be capable of field regulation of the setting time.

3. Be suitable for nighttime placement.

The latex shall be combined with the asphalt emulsion at the emulsion mill to produce a homogeneous mixture.

The latex modified emulsion upon standing undisturbed for a period of 24 hours shall show no color striations, but shall be a uniform color throughout.

The latex or polymer modified emulsified asphalt shall be accepted by certification from the manufacturer.

Subsection 908.03-Permanent Steel Bridge Deck Forms; Delete ASTM A446 and A525, and **Replace** with A653

Subsection 908.03(C) First paragraph. Change to read as follows:

All high strength bolts, nuts and washers shall be certified to have met the specified tests identified in their individual ASTM Specification designations, both as individual components, and as assemblies (Bolts, Nuts, and Washers).

Subsection 908.07-Gray Iron Castings. Reviseentire subsection to the following:

908.07-Gray Iron Castings. All castings shall be of the type specified and shall be within reasonably close conformity with the dimensions shown on the Plans. The castings shall conform to AASHTO M105, with the additional requirements herein, and unless otherwise specified all castings shall be Class 30.

Test bars for tension testing shall be cast in accordance with AASHTO M 105, Table 2, Test Bar B.

All castings shall be cleaned of sand and scale by sand blasting or other effective methods so as to present a smooth, clean, and uniform surface.

Gray iron castings shall have the date of manufacture cast into each unit.

Manhole castings shall have the lid and lid seat of the rim machined to form a true bearing.

All castings shall weigh at least 95% of the theoretical weight shown on the Plans.

Subsection 914.09 Polyvinyl Chloride Pipe (PVC). Revise entire subsection to the following:

914.09-Polyvinyl Chloride Pipe(PVC) . Pressurized pipe accepted under this Specification shall conform to the requirements of ASTM D 1785. Pipe Culverts accepted under this Specification shall conform to the requirements of ASTM D 1784.

Subsection 914.10-High Density Polyethylene Plastic Pipe. Revsie entire subsection to the following:

914.10, High Density Polyethylene Plastic Pipe. Pipe Culverts accepted under this specification shall conform to the requirements of AASHTO M 294, Type S. Slope Drains accepted under this specification shall conform to the requirements of AASHTO M 294, Type C or Type S.

Subsection 916.02 (a) Aluminum flat Sheet; **Revise** as shown below:

(a). Aluminum flat sheet (sign blanks) and plates (permanent and temporary) shall meet ASTM B 209, Alloy 6061 T6 or 5052-H38. Recycled aluminum flat sheet (sign blanks) meeting ASTM

B209, Alloy 6061 T6, or 5052-H38 may be used for temporary signing only. Composite material sign blanks (temporary signing only) shall be selected from the Department's QPL. The sign blanks shall be flat and shall contain no visible lateral bow.

Subsection 918.08: Replace entire section, with the following:

The marking material shall be prefabricated plastic consisting of white or yellow pigmented plastic with reflective glass spheres uniformly distributed throughout the entire cross sectional area and shall be capable of being affixed to bituminous or Portland cement concrete pavement by either a pressure sensitive pre-coated adhesive or liquid contact cement. The material shall be provided complete in a form that will facilitate rapid application and protection during shipment and storage. Solvents, adhesives and necessary equipment for proper application for life shall be in accordance with manufacturer's instructions. The material shall be manufactured and packaged in such a manner to permit storage at normal shelf temperatures for periods of up to one year after purchase. Contact cements, where used, shall have a shelf life of 6 months. The material shall mold itself to pavement contours, breaks, faults, and the like by action of traffic at normal pavement temperatures. The material shall have resealing characteristics so that it will fuse with itself and with previously applied marking materials of the same composition under normal conditions of use.

Prefabricated legends and symbols must conform to the applicable shapes and sizes as outlined in the Manual on Uniform Traffic Control Devices for Streets and Highways. These pavement markings shall be on the Department's QPL.

Materials: The marking material shall be a 60 mil (1.50 mm) retroreflective pliant polymer conforming to the following requirements. The retroreflective pliant polymer pavement marking film shall consist of a mixture of high quality polymeric materials and pigments with 1.50 minimum refractive index glass spheres uniformly distributed throughout its cross sectional area, and with a reflective layer of beads bonded to the top surface. Composition shall be as follows:

Material	Min. % by Weight
Resins & Plasticizers	20
Pigments	30
Graded Glass Beads	33

This material shall be capable of adhering to asphaltic or Portland cement concrete, by means of a pressure sensitive, pre-coated adhesive, or by a liquid contact cement applied at the time of installation.

Tensile Strength. The film shall have a minimum tensile strength of 40 psi (275 kPa) of cross section when tested according to ASTM D 638. A sample 6 x 1 x 0.06 in.(150 x 25 x 1.5 mm) shall be tested at a temperature between 70° and 80° F(21 to 27° C) using a jaw speed of ¼ in.(6 mm) per minute.

Elongation. The film shall have a minimum elongation of 75% when tested according to ASTM D 638.

Plastic Pull Test. A test specimen made the same size as described under "Tensile Strength" above shall support a dead weight of 4 lbs. (1.8 kgs.) for not less than 5 minutes at a temperature between 70 and 80° F (21 to 27° C).

Pigmentation. The pigments shall be selected and blended to provide a marking film that is white or yellow conforming to standard highway colors through the expected life of the film.

Pigments. Sufficient titanium dioxide pigment meeting Federal Specification TT-P-442 shall be used in white markings to insure a dense opaque marking. Pigments shall include titanium dioxide for white plastic and C. P. medium chrome yellow for yellow plastic.

Sufficient medium chrome yellow pigment meeting Federal Specification TT-P-346b, Type 111, shall be used to insure a durable finished color that complies with

Highway Yellow Color Tolerance Chart and matches Chip 33538 of Federal Standard 595. The yellow plastic shall have a minimum of 18% pigment as chrome yellow.

Glass Beads. The glass beads shall be American made, colorless and have a minimum index of refraction of 1.50 when tested using the liquid oil immersion method. The size and quality of the beads will be such that performance requirements for the retroreflective pliant polymer film shall be met.

The film shall have a glass bead retention quality such that when a 2 x 6 in. (50 x 150 mm) sample is bent over a 1/2 in. (13 mm) diameter mandrel, with the 2 in. (50 mm) dimension perpendicular to the mandrel axis, microscopic examination of the area on the mandrel shall show no more than 10% of the beads with entrapment by the binder of less than 40%.

Skid Resistance. The surface of the retroreflective pliant polymer shall provide a minimum skid resistance value of 35 BPN when tested according to ASTM E 303.

Color: ***The color of the*** *white* ***thermoplastic material shall be pure white and conform to Federal standard 595-17778. The color of the*** *yellow* ***thermoplastic material shall conform to Federal Standard 595-33538 and meet the following chromaticity specifications.***

X and **Y** coordinates shall fall in an area bordered by these coordinates:

X	**0.470**	**0.510**	**0.490**	**0.537**
Y	0.455	0.489	0.432	0.462

Reflectance. The white and yellow markings shall have the following minimum initial retroreflectance values as measured in accordance with the testing procedures of ASTM D 4061. The photometric quantity to be measured shall be specific luminance (SL) and shall be expressed as millicandelas per square foot per footcandle.

	White		**Yellow**	
Entrance Angle	86.0	86.5	86.0	86.5
Observation Angle	0.2	1.0	0.2	1.0
Specific Luminance	500	300	400	175

Thickness. The retroreflective pliant polymer film without adhesive shall be supplied in a standard thickness of 60 mils (1.5 mm).

Performance. The retroreflective pliant polymer, when applied according to the recommendations of the manufacturer, shall provide a neat, durable marking that will not flow or distort due to temperature if the pavement surface remains stable. The pliant polymer shall provide a cushioned resilient substrate that

reduces bead crushing and loss. The film shall be weather resistant, and through normal traffic wear shall show no appreciable fading, lifting or shrinkage throughout the useful life of the marking. It shall also show no significant tearing, roll back or other signs of poor adhesion.

Subsection 918.09 B 3 Chemical Additives, Add the following as **Subsection B-3:**

3 Warm Mix Asphalt (WMA) additives. Organic wax or foaming additives may be added to bituminous plant mix to reduce placement temperatures in accordance with subsection 407.11. WMA additives should be introduced into the mixture at a constant rate satisfactory to produce mix temperatures as per subsection 407.11. If the proportions of the additive change during the course of mix production, these changes shall be noted and recorded. The manner in which the additive is introduced into the mixture shall be approved by the Department. The Department will maintain a list of qualified WMA additives. No product shall be used unless it appears on this list.

Subsection 918.18-Mulch Material, Add the following as the last sentence:

"An approved tackifier from the QPL shall be used to hold mulch in place."

Subsection 918.23; Remove and Replace entire subsection with the following:

918.23- Thermoplastic Pavement Marking Material. This material shall conform to AASHTO M-249 with the following changes. The material requirements are as follows.

Composition: The retroreflective pavement marking material shall be an Alkyd / Maleic based thermoplastic material consisting of homogeneously mixed pigments, filler, resins and glass beads. The pigment, beads, and filler shall be uniformly dispersed in the resin. The material shall be manufactured from virgin material using no reprocessed components.
The material shall be free from all skins, dirt, and foreign objects and shall comply with requirements from the following table.

TABLE 1

Component	White	Yellow
% Binder Content	19.0 min	19.0 min
% TiO_2 Pigment,	10.0 min	N/A
% Intermix Glass Beads	35 min	35 min
% Calcium Carbonate \ Fillers	36 max*	46 max*

*The amount of Calcium Carbonate and inert fillers shall be as opted by the manufacturer, providing all other specifications are met.

The Titanium Dioxide shall be Rutile Type II in accordance with ASTM D 476 with a minimum purity of 93%.

Use white thermoplastic which does not contain anatase titanium dioxide pigment.

The total silica content used in the formulation of the thermoplastic shall be the premixed beads. Uniformly disperse the pigment, beads and filler in the binder.

The Alkyd / Maleic binder shall consist of a mixture of synthetic resins and high boiling point plasticizers one of, which shall be solid at room temperature. At least one-half of the binder composition shall be 100% Maleic modified glycerol ester of resin and shall be no less than 15% of the entire material formulation. The binder shall contain no petroleum, hydrocarbon resins, tall oil resins or rosins.

The thermoplastic material shall be free of contaminates and shall be dry blended or hot mixed from 100% virgin stock using no reprocessed materials.

The Thermoplastic material shall be formulated such that when it is on the roadway surface at any natural temperature it exists in a hard, solid state with cold ductility that permits normal movement with the road surface without chipping, or cracking.

The thermoplastic shall not deteriorate or discolor when held at the application temperature for periods of time up to 4 hours or upon repeated reheating (a minimum of 4 times).

The color, viscosity, and chemical properties versus temperature characteristics of the thermoplastic material shall remain constant for up to 4 hours at the application temperature and shall be the same from batch to batch.

The thermoplastic material shall be readily applicable at temperatures between 400°F and 440°F from the approved equipment to produce lines and symbols of the specified thickness above the pavement surface.

Physical Requirements: After 4 hours @ 425°F

The thermoplastic material after heating for 4 hours ± 5 minutes at 218 ± 2°C (425 ± 3°F) and cooled to 25 ± 2°C (77 ± 3°F) shall meet the physical requirements set forth in AASHTO M-249 with the following changes.

The material shall be tested in accordance with AASHTO T-250 and or with the appropriate method in Federal Test Method Standard #141 or ASTM Designation.

Safety – No toxic fumes.

Bond Strength – (ASTM-D4796), 180 p.s.i. min.

Specific Gravity – Not to exceed 2.30

Yellowness Index – The white thermoplastic shall not exceed a yellowness index of 0.15.

Glass Beads

General: All beads used for Thermoplastic Pavement Markings shall be clear, transparent, colorless glass, smooth and spherically shaped, free of milkiness, pits, or excessive air bubbles and conform to the following specific requirements.

Silica content of the glass beads shall be no less than 60%.

Color and Clarity: Beads shall be colorless, clear and free from carbon residues.

Roundness: Minimum true spheres overall shall be 80% when tested in accordance with ASTM-D-1155, for larger beads use visual inspection.

Index of Refraction: Minimum of 1.50, when tested by the liquid emersion method @ 77°F

Air Inclusions: Maximum of 3% overall

Intermix Glass Beads

Glass Beads used for intermix shall be premixed into the thermoplastic mixture and shall consist of 35% of the overall thermoplastic formulation. Intermix beads shall be uncoated and defined by two distinct gradations and meet the following requirements.

Type 1 Intermix glass beads shall comprise 50 % minimum of the 35% of the overall thermoplastic formulation (Intermix Glass Beads) and shall conform to AASHTO M-247-09, Type 1 with the exception of minimum true spheres overall shall be 80% as stated above, when tested in accordance with ASTM D-1155.

Type 3 Intermix glass beads shall comprise 50 % minimum of 35% of the overall thermoplastic formulation (Intermix Glass Beads) and shall conform to AASHTO M-247-09, Type 3 with the exception of minimum true spheres overall shall be 80% as stated above, when tested in accordance with ASTM D-1155.

Specification for Double Drop System

Double Drop on Glass Beads

General: All beads used for the **Double Drop system** for Thermoplastic Pavement Markings shall be clear, transparent, colorless glass, smooth and spherically shaped, free of milkiness, pits, or excessive air bubbles and conform to the following specific requirements.

Silica content of the glass beads shall be no less than 60%.

Color and Clarity: Beads shall be colorless, clear and free from carbon residues.

Roundness: Minimum true spheres overall shall be 80% when tested in accordance with ASTM-D-1155, for larger beads use visual inspection.

Index of Refraction: Minimum of 1.50, when tested by the liquid emersion method @ 77°F

Air Inclusions: Maximum of 3% overall

Drop on glass beads shall consist of a double drop system meeting the requirements specified herein. The double drop system shall be capable of applying glass beads at the specified application rates. Beads shall be applied across the entire line width assuring uniform application and embedment of the beads to 50 to 60% of the bead diameter.

Type 1 drop on beads shall be dual coated for moisture resistance and adhesion , Also meet the requirements of AASHTO M-247-09 Type 1 with the exception that the beads shall be 80% round overall.
Type 4 drop on beads shall be dual coated for moisture resistance and adhesion , Also shall meet the requirements of AASHTO M-247-09 Type 4 with the exception that the beads shall be 80% round overall.

918.26-Raised Reflective Pavement Markers with Adhesive. Remove "**with Adhesive**" from the subsection title.
Subsection 918.27-Geotextile. Add "and Geosynthetics" to subsection title. **Replace** entire subsection with the following:

Geotextile and Geosynthetic materials and their types shall be on the Departments Qualified Products List. Geotextile and Geosynthetic material used shall meet the material requirements of the Standard Drawing.

The contractor shall furnish a certified laboratory test report from an approved testing laboratory and a certified letter stating the product is the same as on the Department's Qualified Products List with each shipment of materials. Laboratory test reports shall include the actual numerical test data obtained. All rolls shall be clearly labeled as being part of the same production run from which the test date was derived. Fabric shall be protected to prevent damage during transportation, storage, and installation. Geotextile and Geosynthetic rolls shall be covered during storage to protect against UV degradation and shall be stored with rolls elevated up off of the ground. Fabric that is torn, punctured, or otherwise damaged shall not be installed.

S T A T E **O F** **T E N N E S S E E**

March 1, 2006

SPECIAL PROVISION

REGARDING

UNBALANCED BIDS

The Department will review all unit prices submitted by the apparently lowest responsible bidder and will decide whether any of the unit prices are excessively above or below a reasonable cost analysis value determined by the Engineer.

In the event any unit prices are determined to be unbalanced and contrary to the interest of the Department, the right is reserved to reject such bid at the discretion of the Department or to award the Contract and limit progress payments on units of work performed on any excessively priced items to costs that are satisfactorily documented by the Contractor plus 20 percent, until 85 percent of the Contract has been completed. Upon completion of 85 percent of the Contract, the Contractor will be reimbursed in accordance with **Subsection 109.06** of the Standard Specifications for the accepted quantities of work performed on the excessively priced items.

S T A T E **OF** **T E N N E S S E E**

October 1, 2006

REV: February 5, 2007

SPECIAL PROVISION

REGARDING

EMPLOYING AND CONTRACTING WITH ILLEGAL IMMIGRANTS

The State shall endeavor to do business only with those contractors and subcontractors that are in compliance with the Federal Immigration and Nationality Act. This policy shall apply to all State Contractors including subcontractors. This policy statement is issued to establish implementation guidance to procuring state agencies and contractors reflecting the requirements of Governor's Executive Order #41, An Order Regarding Compliance with Federal and State Laws Related to Employing and Contracting with Illegal Immigrants, and the requirements of Public Acts of 2006, Chapter Number 878 of the State of Tennessee (codified at *Tennessee Code Annotated,* Title 12, Chapter 4, Part 1).

1. The Contractor hereby attests, certifies, warrants, and assures that the Contractor shall not knowingly utilize the services of an illegal immigrant in the performance of this Contract and shall not knowingly utilize the services of any subcontractor who will utilize the services of an illegal immigrant in the performance of this Contract. The Contractor shall reaffirm this attestation, in writing, by submitting to the State a completed and signed copy of the "Attestation form" provided by the Department, semi-annually during the period of this Contract.

2. Prior to the use of any subcontractor in the performance of this Contract, and semi-annually thereafter, during the period of this Contract, the Contractor shall obtain and retain a current, written attestation that the subcontractor shall not knowingly utilize the services of an illegal immigrant to perform work relative to this Contract and shall not knowingly utilize the services of any subcontractor who will utilize the services of an illegal immigrant to perform work relative to this Contract.

3. The Contractor shall maintain records for its employees used in the performance of this Contract. Said records shall include a completed federal Department of Homeland Security Form I-9, *Employment Eligibility Verification*, for each employee and shall be subject to review and random inspection at any reasonable time upon reasonable notice by the State.

4. The Contractor understands and agrees that failure to comply with this section will be subject to the sanctions of Public Chapter 878 of 2006 for acts or omissions occurring after its effective date. This law requires the Commissioner of Finance and Administration to prohibit a contractor from contracting with, or submitting an offer, proposal, or bid to contract with the State of Tennessee to supply goods or services for a period of one year after a contractor is discovered to have knowingly used the services of illegal immigrants during the performance of this contract.

For the Purposes of this policy, "illegal immigrant" shall be defined as a non-citizen who has entered the United State of America without federal government permission or stayed in this country beyond the period allowed by a federal government-issued visa authorizing the non-citizen to enter the country for specific purposes and a particular time period.

Compliance and non-compliance procedures will be as specified in the Tennessee Department of Finance and Administration's Policy on "Ensuring Compliance with Federal Immigration Laws by State Contractors and Subcontractors".

S T A T E **O F** **T E N N E S S E E**

(Rev. 6-19-95)
(Rev. 6-1-04)
(Rev. 06-20-2011)

March 1, 2006

SPECIAL PROVISION

REGARDING

BUY AMERICA REQUIREMENTS

All manufacturing processes for iron and steel products, and coatings applied thereon, used in this project shall occur in the United States except that if the proposal has bid items for furnishing domestic and foreign iron and steel, the bidder will have the option of (1) submitting a bid for furnishing domestic iron and steel, or (2) submitting a bid for furnishing domestic iron and steel and a bid for furnishing foreign iron and steel. If option (2) is chosen the bid will be tabulated on the basis of (a) the total bid price using the bid price for furnishing domestic iron and steel and, (b) the total bid price using the bid price for furnishing foreign iron and steel.

For the total bid based on furnishing foreign iron and steel to be considered for award, the lowest total bid based on furnishing domestic iron and steel must exceed the lowest total bid based on furnishing foreign iron and steel by more than 25 percent. The 25 percent differential applies to the total bid for the entire project, not just the bid prices for the steel or iron products.

Iron and steel products are defined as products rolled, formed, shaped, drawn, extruded, forged, cast, fabricated or otherwise similarly processed from iron and steel made in the United States. Iron products are included, however, pig iron and processed, pelletized, and reduced iron ore may be purchased outside the United States.

Manufacturing begins with initial melting and continues through the coating stage. Any process which modifies chemical content, physical size or shape, or the final finish is considered a manufacturing process. Coatings include epoxy, galvanizing, painting or any other surface protection that enhances the value and/or durability of a material.

The contractor shall provide a certification to the Engineer with each shipment of iron and steel products to the project site that the manufacturing processes for the iron and steel products occurred in the United States. No steel shall be placed until the contractor ensures the requirements of this Special Provision are met.

The above requirements do not prevent a minimal use of foreign materials, if the cost of such materials used does not exceed 0.1 percent of the total contract cost or $2,500.00, whichever is greater. If steel not meeting the requirements of this Special Provision is used, the contractor

shall provide a written statement to the Department prior to its use indicating where the steel will be incorporated in the work, the value of the steel, the percentage of the contract amount, and the appropriate invoices shall be submitted as documentation.

The contractor shall be responsible for all cost associated with any steel that is permanently incorporated into the project that does not meet the requirements of this Special Provision without prior written approval from the Department, up to and including removal and replacement.

S T A T E **O F** **T E N N E S S E E**

Rev. 04-03-2006
Rev. 11-22-2011
Rev. 02-13-2012

March 1, 2006

SPECIAL PROVISION

REGARDING

WATER QUALITY AND STORM WATER PERMITS

Scope

The conditions of this Special Provision apply to all construction on this project pursuant to the following:

1. Section 404 of the Federal Clean Water Act (33 U.S.C. §1344), and all implementing regulations, including without limitation regulations of the U.S. Army Corps of Engineers governing permits for discharges of dredged or fill material into waters of the United States in 33 CFR Part 323; and
2. The Tennessee Water Quality Control Act (T.C.A. §69-3-101, et seq.) and all implementing regulations, including without limitation the Rules of the Tennessee Department of Environment and Conservation governing NPDES permits in Chapter 1200-4-10, and Aquatic Resource Alteration permits in Chapter 1200-4-7; and
3. Section 26a of the TVA Act of 1933 as amended (49 Stat. 1079, 16 U. S. C. sec. 831y1.) and all implementing regulations, including without limitation the regulations of the Tennessee Valley Authority governing construction in the Tennessee River System in 18 C.F.R., Part 1304; and
4. The Tennessee Wildlife Resources Agency Reelfoot Lake Watershed Management permit program (T.C.A. section 70-5-1,), and all implementing regulations, including without limitation regulations authorizing any activity, practice, or project which has or is likely to have the effect of diverting surface or subsurface water from the Lake or have the effect of draining or otherwise removing water from Reelfoot Lake; and
5. Coast Guard Bridge Permit (USCG) (Section 9 of the Rivers and Harbors Appropriation Act of 1899) and all implementing regulations, including but not without limitation for projects which impact streams deemed navigable by the U.S. Coast Guard.

Responsibility

It is understood and agreed that the Contractor assumes all responsibilities of the permittee as indicated in the permit that relates to protection of the "waters of the United States" and/or "waters of the State of Tennessee."

It is also understood and agreed that the Contractor shall be responsible for obtaining any additional permits required by the Contractor's method of construction, including without limitation haul roads, temporary channels or temporary ditches, or off-site waste and/or borrow areas.

It is also understood that the Contractor shall be responsible for implementing the provisions of the Water Quality (including, but not limited to, TDEC ARAP, USACE 404, TVA Section 26a, Coast Guard, TWRA) and Storm Water [including, but not limited to, National Pollution Discharge Elimination System (NPDES), Statewide Stormwater Management Plan (SSWMP)] Permits and requirements that pertain to construction activities.

The Contractor by signing this contract is indicating that the Contractor has reviewed a copy of the permit provisions, including NPDES Permit provisions at http://www.tdot.state.tn.us/construction/permits/npdes.pdf, the site specific SWPPP, the contract plans, Standard Specifications and contract Special Provisions and finds the permit requirements and erosion prevention and sediment control (EPSC) procedures to be reasonable, workable, and binding.

It is also understood that the Contractor shall not be released from the project site responsibilities under the NPDES permit provisions until the Notice of Termination (NOT) is submitted to TDEC by the TDOT Regional Construction Supervisor. The NOT is a certification that the construction project site is permanently stabilized and that all construction related discharges have ceased. This means that the use of EPSC measures to alleviate concerns of surface erosion and transport of sediment to surface water conveyances or to waters of the state is no longer necessary. Furthermore, it means that permanent controls, hard surfaces and/or vegetation, employed at the site are deemed adequate to prevent erosion and sediment transport and no other potential sources of construction-related pollution are on the project.

It is also understood that the Contractor shall not be released from any warranty provided for EPSC plantings, including sod and trees. If the entire project is complete as outlined in **Subsection 105.15** of the **Standard Specifications,** the Contractor shall be required to supply a performance bond as outlined in **Subsection 802.15** of the **Standard Specifications** to cover any warranty for EPSC plantings.

NPDES Permit Required Action

The Contractor (or their representative) shall accompany the EPSC inspector (TDOT personnel or TDOT hired consultant) on all EPSC inspections of the entire construction project including permitted locations and potentially impacted streams as well as attend all QA/QC Project Assessments.

EPSC Inspections shall be conducted as required in the most current TN Construction General Permit.

EPSC inspections shall be performed on the schedule established in the TN Construction General Permit until the site is permanently stabilized to determine if the permit requirements are being met. Where sites or portion(s) of construction sites have been temporarily stabilized, or runoff is unlikely due to winter conditions (e.g. site covered with snow or ice), such inspection only has to be conducted once per month until thawing or precipitation results in runoff or construction activity resumes. Written notification of the intent to change the inspection frequency and the justification for such request must be submitted to the TDOT Project Supervisor and the TDEC Central Office before proceeding.

An individual representing the Contractor, who holds a current TDEC "*Fundamentals of Erosion Prevention and Sediment Control Level I*" certification shall accompany the EPSC inspector on all required EPSC inspections. The Contractors project supervisor(s) shall also hold a current TDEC "*Fundamentals of Erosion Prevention and Sediment Control Level I*"

certification. Proof of required personnel training for the individual(s) shall be provided to the TDOT Project Supervisor prior to beginning of construction.

The TDOT EPSC inspector shall document all deficiencies on the required TDOT EPSC Inspection Report form (provided in the SWPPP). The Contractor (or their representative) shall sign the TDOT EPSC Inspection Report form and any supporting documentation indicating that he is in agreement with the report, recommendations and repair schedule as stated within the documentation.

Additionally, the Contractor shall make necessary maintenance and repairs relative to deficiencies in these permit conditions or requirements within twenty-four (24) hours after an inspection identifies the maintenance or repair need, and/or when directed to do so by the TDOT Project Supervisor, unless conditions make a particular activity impracticable. Any such conditions that make immediate repairs impracticable shall be documented and provided to the TDOT Project Supervisor, via the inspection report, and be accompanied by an expected repair schedule based on forecasted weather conditions.

The Contractor further agrees that he will execute two (2) copies of the Notice of Intent (NOI) form of the permit (provided by the Department), indicating his acceptance of the stipulations contained therein. The Contractor further agrees, that should he fail to execute said copies and return them to the TDOT Construction Division within ten (10) calendar days after submittal of the contract proposal to him, that the Department may at its discretion cancel the award with the Contractor forfeiting his bid bond.

Further, the Contractor agrees to review the site specific Stormwater Pollution Prevention Plan (SWPPP) that will be made available prior to or at the pre-construction conference, for any additional EPSC requirements. The Contractor shall sign and submit two copies of the SWPPP signature page (provided by the Department within the site specific SWPPP). The Contractor may submit for review and approval changes/revisions to the SWPPP to better prevent erosion and sediment transport at any time after contract execution. Rejection of any submittals does not relieve the contractor of any liability for appropriate Best Management Practices (BMPs).

If at any time during this contract, the requirements for the Water Quality Permits and/or the Storm Water Permits for Construction Related Activities are changed/revised/updated, the Contractor shall be notified in writing by the Department of such requirements. The Contractor shall comply with the new requirements within thirty (30) days of the Department notification.

If at any time the Contractor becomes aware that sedimentation is occurring or has occurred in streams impacted by the specified project, the Contractor shall immediately notify the TDOT Project Supervisor to evaluate the EPSC measures employed. A determination of the cause for sedimentation will be made by the Department. The Contractor shall immediately repair or replace defective EPSC measures, and install, as applicable, additional or other EPSC measures with the goal of eliminating future sedimentation. Once a remediation plan is provided by the Department, the Contractor shall, within twenty-four (24) hours after notification, begin the remediation as required. Based on the cause of sedimentation, the Department will determine if the cost of remediation will be performed at the Contractor's expense.

Failure to Comply

In the event a Notice of Violation (NOV) or Order pursuant to the Tennessee Water Quality Control Act or the Federal Clean Water Act is issued on this project, any and all fines will be the sole responsibility of the Contractor as outlined in **Subsection 107.01** of the **Standard Specifications for Road and Bridge Construction.**

Failure of the Contractor to comply with this Special Provision or take immediate corrective actions required within twenty-four (24) hours (unless documented conditions make a particular maintenance or repair activity impracticable immediately) shall be reason for the TDOT Project Supervisor to suspend all other work on the Project, except erosion prevention and sediment control (EPSC) and traffic control, applying non-refundable deductions of monies from the Contract per calendar day from monies due to the Contractor for any EPSC work on the Project. This deduction can be made for each location, as determined by the TDOT Project Supervisor, for each calendar day that the deficiency is allowed to remain and charged as item description *"Failure to Comply with Permit Deduction"*. A deduction shall be made from monies due the Contractor, not as a penalty, but as liquidated damages, as indicated in **Subsection 108.07** of the **Standard Specifications for Road and Bridge Construction March 1, 2006**, as amended.

If the Contractor does not make necessary corrections/adjustments in a timely manner as required above, the Department will implement the provisions of **Subsection 209.07 and Subsection 109.08** of the **Standard Specifications for Road and Bridge Construction** that provides for the Department making repairs and recovering the costs thereof from the Contractor.

The Department will not participate in any payment or reimbursement for fines and will not authorize time extensions due to delays in project progress for work stoppage, to remedy the violations stated within the NOV, required by the TDOT Project Supervisor as stated in **Subsection 105.01** of the **Standard Specifications for Road and Bridge Construction**.

NOTICE TO BIDDERS

Per TDOT Natural Resources Office, Environmental Division:

NO Water Quality Permits are required for this project.

S T A T E O F T E N N E S S E E

October 2012
Project No.:041039.00
County: Washington

SPECIAL PROVISION

REGARDING

"SPECIALTY ITEMS"

In accordance with the provisions of Subsection 108.01, Standard Specifications for Road and Bridge Construction, 2006, all construction items included in the following described work are hereby designated as "Specialty Items":

Item 712 – Traffic Control Items
Item 713 – Signing Items
Item 716 – Pavement Marking Items
Item 730 – Traffic Signal Items

S T A T E **O F** **T E N N E S S E E**

(Rev. 02-03-07) March 1, 2006

SPECIAL PROVISION

REGARDING

HIGHWAY SIGNS, LUMINAIRES, AND TRAFFIC SIGNALS

Scope:
The design requirements of this Special Provision shall apply to Section 713-Highway Signing, Section 714-Roadway and Structure Lighting, and Section 730-Traffic Signals of the Standard Specifications for Road and Bridge Construction, March 1, 2006.

Description:
The design of the supports for overhead sign bridges, cantilever and butterfly configurations, high mast lighting, luminaires and traffic signals shall be in accordance with the American Association of Highway and Transportation Officials (AASHTO) Standard Specifications for Structural Supports for Highway Signs, Luminaires and Traffic Signals, current edition, with addenda.

General Conditions:
All overhead sign bridge, cantilever and butterfly sign structures, traffic signal mast arm structures and high mast light poles, as well as any luminaire poles 90-ft or greater in height, shall be designed using the Fatigue Category 1 provisions found in the subject specifications except that, design for galloping-induced fatigue, is excluded. Fatigue designs are not required for luminaire poles less than 90-ft in height, span-wire poles or roadside sign poles.

In lieu of designing for galloping-induced fatigue in mast arm pole assemblies, a 60-inch by 16-inch by 0.125 gauge aluminum or galvanized steel panel shall be installed near the end of the mast arm with the long axis of the panel collinear with the long axis of the mast. The panel shall be mounted at such a height as to provide a least a 6-inch clearance from the top of the signal assembly or sign blank located on the mast arm within the length of the anti-galloping panel. The panel and attachment hardware shall be shown on the shop drawings, and is considered an item included in the price bid for the mast arm assembly.

Additionally, all mast arm connections to the support pole shall be accomplished using a wrap-around ring stiffener assembly.

The following design coordinating instructions are as follows:

- The Basic Wind Speed shall be 90 mph.
- The Design Life/Recurrence Interval shall be 50-years.
- The speed for calculating Truck-induced gust loads shall be 65 mph.

S T A T E **O F** **T E N N E S S E E**

March 1, 2006

SPECIAL PROVISION

REGARDING

EQUAL EMPLOYMENT OPPORTUNITY

Reference:
Federal-Aid Highway Program Manual
Transmittal 147, June 26, 1975
Replaces FHWA Order Interim 7-2(1)

Specific Equal Employment Opportunity Responsibilities

GENERAL

a) Equal employment opportunity requirements not to discriminate and to take affirmative action to assure equal employment opportunity as required by Executive Order 11246 and Executive Order 11375 are set forth in Required Contract Provisions (Form FHWA-1273 or PR-1316, as appropriate) and these Special Provisions which are imposed pursuant to Section 140 of Title 23, U.S.C., as established by Section 22 of the Federal-Aid Highway Act of 1968. The requirements set forth in these Special Provisions shall constitute the specific affirmative action requirements for project activities under this contract and supplement the equal employment opportunity requirements set forth in the Required Contract Provisions.

b) The contractor will work with the Tennessee Department of Transportation and the Federal Government in carrying out equal employment opportunity obligations and in their review of his/her activities under the contract.

c) The contractor and all his/her subcontractors holding subcontracts not including material suppliers, exceeding $10,000, will comply with the following minimum specific requirement activities of equal employment opportunity: (The equal employment opportunity requirements of Executive Order 11246, as set forth in Volume 6, Chapter 4, Section 1, Subsection 1 of the Federal-Aid Highway Program Manual, are applicable to material suppliers as well as contractors an subcontractors). The contractor will include these requirements in every subcontract exceeding $10,000 with such modification of language as is necessary to make them binding on the subcontractor.

Equal Employment Opportunity Policy

The contractor will accept as his operating policy the following statement which is designed to further the provision of equal employment opportunity to all persons without regard to their age, race, color, religion, sex, national origin or disability and to promote the full realization of equal employment opportunity through a positive continuing program:

> It is the policy of this Company to assure that applicants are employed, and that employees are treated during employment opportunity officer (hereinafter referred to as the EEO Officer) who will have the responsibility for and must be capable of effectively administering and promoting an active contractor program of equal employment opportunity and who must be assigned adequate authority and responsibility to do so.

Equal Employment Opportunity Officer

The contractor will designate and make known to the Tennessee Department of Transportation contracting officers an equal employment opportunity officer (hereinafter referred to as the EEO Officer) who will have the responsibility for and must be capable of effectively administering and promoting an active contractor program of equal employment opportunity and who must be assigned adequate authority and responsibility to do so.

Dissemination of Policy

(a) All members of the contractor's staff who are authorized to hire, supervise, promote, and discharge employees, or who recommend such action, or who are substantially involved in such action, will be made fully cognizant of, and will implement, the contractor's equal employment opportunity policy and contractual responsibilities to provide equal employment opportunity in each grade and classification of employment. To ensure that the above agreement will be met, the following actions will be taken as a minimum:

(1) Periodic meetings of supervisory and personnel office employees will be conducted before the start of work and then not less often than once every six months, at which time the contractor's equal employment opportunity policy and its implementation will be reviewed and explained. The meetings will be conducted by the EEO Officer or other knowledgeable company official.

(2) All new supervisory or personnel office employees will be given a thorough indoctrination by the EEO Officer or other knowledgeable company official covering all major aspects of the contractor's equal employment opportunity obligations within thirty days following their reporting for duty with the contractor.

(3) All personnel who are engaged in direct recruitment for the project will be instructed by the EEO Officer or appropriate company official in the contractor's procedures for locating and hiring minority group employees.

(b) In order to make the contractor's equal employment opportunity policy known to all employees, prospective employees and potential sources of employees, i.e., schools, employment agencies, labor unions (where appropriate), college placement officers, etc., the contractor will take the following actions:

(1) Notices and posters setting forth the contractor's equal employment opportunity policy will be placed in areas readily accessible to employees, applicants for employment and potential employees.

(2) The contractor's equal employment opportunity policy and the procedures to implement such policy will be brought to the attention of employees by means of meetings, employee handbooks, or other appropriate means.

Recruitment

(a) When advertising for employees, the contractor will include in all advertisements for employees the notation: "An Equal Opportunity Employer." All such advertisements will be published in newspapers or other publications having a large circulation among minority groups in the area from which the project work force would normally be derived.

(b) The contractor will, unless precluded by a valid bargaining agreement, conduct systematic and direct recruitment through public and private employee referral sources likely to yield qualified minority group applicants, including, but not limited to, State employment agencies, schools, colleges and minority group organizations. To meet this requirement, the contractor will, through his EEO Officer, identify sources of potential minority group employees, and establish with such identified sources procedures whereby minority group applicants may be referred to the contractor for employment consideration.

(c) In the event the contractor has a valid bargaining agreement providing for exclusive hiring hall referrals, he is expected to observe the provisions of that agreement to the extent that the system permits the contractor's compliance with equal employment opportunity contract provisions. (The U.S. Department of Labor has held that where implementation of such agreements have the effect of discriminating against minorities or women, or obligates the contractor to do the same, such implementation violates Executive Order 11246, as amended).

(d) The contractor will encourage his present employees to refer minority group applicants for employment by posting appropriate notices or bulletins in areas accessible to all such employees. In addition, information and procedures with regard to referring minority group applicants will be discussed with employees.

Personnel Actions

Wages, working conditions, and employee benefits shall be established and administered, and personnel actions of every type, including hiring, upgrading, promotion, transfer, demotion, layoff, and termination, shall be taken without regard to age, race, color, religion, sex, national origin or disability. The following procedures shall be followed:

(a) The contractor will conduct periodic inspections of project sites to insure that working conditions and employee facilities do not indicate discriminatory treatment of project site personnel.

(b) The contractor will periodically evaluate the spread of wages paid within each classification to determine any evidence of discriminatory wage practices.

(c) The contractor will periodically review selected personnel actions in depth to determine whether there is evidence of discrimination. Where evidence is found, the contractor will promptly take corrective action. If the review indicates that the discrimination may extend beyond the actions reviewed, such corrective action shall include all affected persons.

(d) The contractor will promptly investigate all complaints of alleged discrimination made to the contractor in connection with his obligations under this contract, will attempt to resolve such complaints, and will take appropriate corrective action within a reasonable time. If the investigation indicates that the discrimination may affect persons other than the complainant, such corrective action shall include such other persons. Upon completion of each investigation, the contractor will inform every complainant of all of his avenues of appeal.

Training and Promotion

(a) The contractor will assist in locating, qualifying, and increasing the skills of minority group and women employees, and applicants for employment.

(b) Consistent with the contractor's work force requirements and as permissible under Federal and State regulations, the contractor shall make full use of training programs, i.e., apprenticeship, and on-the-job training programs for the geographical area of contract performance. Where feasible, 25 percent of apprentices or trainees in each occupation shall be in their first year of apprenticeship or training. In the event the Special Provision Regarding Training Program Requirements is provided under this contract, this subparagraph will be superseded as indicated therein.

(c) The contractor will advise employees and applicants for employment of available training programs and entrance requirements for each.

(d) The contractor will periodically review the training and promotion potential of minority group and women employees and will encourage eligible employees to apply for such training and promotion.

Unions

If the contractor relies in whole or in part upon unions as a source of employees, the contractor will use his/her best efforts to obtain the cooperation of such unions to increase opportunities for minority groups and women within the unions, and to effect referrals by such unions of minority and female employees. Actions by the contractor either directly or through a contractor's association acting as agent will include the procedures set forth below:

(a) The contractor will use best efforts to develop, in cooperation with the unions, joint training programs aimed toward qualifying more minority group members and women for membership in the unions and increasing the skills of minority group employees and women so that they may qualify for higher paying employment.

(b) The contractor will use best efforts to incorporate an equal employment opportunity clause into each union agreement to the end that such union will be contractually bound to refer applicants without regard to their age, race, color, religion, sex, national origin or disability .

(c) The contractor is to obtain information as to the referral practices and policies of the labor union except that to the extent such information is within the exclusive possession of the labor union and such labor union refuses to furnish such information to the contractor, the contractor shall so certify to the Tennessee Department of Transportation and shall set forth what efforts have been made to obtain such information.

(d) In the event the union is unable to provide the contractor with a reasonable flow of minority and women referrals within the time limit set forth in the collective bargaining agreement, the contractor will, through independent recruitment efforts, fill the employment vacancies without regard to age, race, color, religion, sex, national origin or disability, making full efforts to obtain qualified and/or qualifiable minority group persons and women. (The U.S. Department of Labor has held that it shall be no excuse that the union with which the contractor has a collective bargaining agreement providing for exclusive referral failed to refer minority employees). In the event the union referral practice prevents the contractor from meeting the obligations pursuant to Executive Order 11246, as amended, and these special provisions, such contractor shall immediately notify the Tennessee Department of Transportation.

Subcontracting

(a) The contractor will use his best efforts to solicit bids from and to utilize minority group subcontractors or subcontractors with meaningful minority group and female representation among their employees. Contractors shall obtain lists of minority-owned construction firms from the Tennessee Department of Transportation.

(b) The contractor will use his best efforts to ensure subcontractor compliance with their equal employment opportunity obligations.

Records and Reports

(a) The contractor will keep such records as are necessary to determine compliance with the contractor's equal employment opportunity obligations. The records kept by the contractor will be designed to indicate:

(1) The number of minority and non-minority group members and women employed in each work classification on the project.

(2) The progress and efforts being made in cooperation with unions to increase employment opportunities for minorities and women. (Applicable only to contractors who rely in whole or in part on unions as a source for their work force).

(3) The progress and efforts being made in locating, hiring, training, qualifying, and upgrading minority and female employees.

(4) The progress and efforts being made in securing the services of minority group subcontractors or subcontractors with meaningful minority and female representation among their employees.

(b) All such records must be retained for a period of 3 years following completion of the contract work and shall be available at reasonable times and places for inspection by authorized representatives of the of the Tennessee Department of Transportation and the Federal Highway Administration.

(c) Each contractor and subcontractor shall submit to the Tennessee Department of Transportation an annual report for every July during which work is performed indicating the number of minority, women and non-minority group employees currently engaged in each work classification required by the contract work. This information is to be reported on Form PR 1391 and is to be received by the Department not later than the 20th of the month following the reporting period.

(d) The contractor and/or sub-contractor will be required to complete other reports as instructed by the Engineer.

(e) Current estimates may be withheld by the Project Engineer when reports are not received within the above specified time limits.

S T A T E **O F** **T E N N E S S E E**

March 1, 2006

SPECIAL PROVISION

REGARDING

STANDARD FEDERAL EQUAL EMPLOYMENT OPPORTUNITY

CONSTRUCTION CONTRACT SPECIFICATIONS (EXECUTIVE ORDER 11246)

1) As used in these specifications:

   a. "Covered area" means the geographical area described in the solicitation from which this contract resulted;

   b. "Director" means Director, Office of Federal Contract Compliance Programs, United States Department of Labor, or any person to whom the Director delegates authority;

   c. "Employer identification number" means the Federal Social Security number used on the Employer's Quarterly Federal Tax Return, U.S. Treasury Department Form 941

   d. "Minority" includes:

      I. Black (all persons having origins in any of the Black African racial groups not of Hispanic origin);

      II. Hispanic (all persons of Mexican, Puerto Rican, Cuban, Central or South American or other Spanish or Portuguese Culture or origin, regardless of race);

      III. Asian and Pacific Islander (all persons having origins in any of the original peoples of the Far East, Southeast Asia, the Indian Subcontinent, or the Pacific Islands); and

      IV. American Indian or Alaskan Native (all persons having origins in any of the original peoples of North America and maintaining indentifiable tribal affiliations through membership and participation or community identification).

2) Whenever the Contractor, or any Subcontractor at any tier, subcontracts a portion of the work involving any construction trade, it shall physically include in each subcontract in excess of $10,000 the provisions of these specifications and the Notice which contains the applicable goals for minority and female participation arid which is set forth in the solicitations from which this contract resulted.

3) If the Contractor is participating (pursuant to 41 CFR 60-4.5) in a Hometown Plan approved by the U.S. Department of Labor in the covered area either individually or through an association, its affirmative action obligations on all work in the Plan area (including goals (including goals and time tables) shall be in accordance with that Plan for those trades which have unions participating in the Plan. Contractors must be able to demonstrate their participation in and compliance with the provisions of any such Hometown Plan. Each Contractor or Subcontractor participating in an approved Plan is individually required to comply with its obligations under the EEO clause, and to make a good faith effort to achieve each goal under the Plan in each trade in which it has employees. The overall good faith performance by other Contractors or Subcontractors toward a goal in an approved Plan does not excuse any covered Contractor's or Subcontractor's failure to take good faith efforts to achieve the Plan goals and timetables.

4) The Contractor shall implement the specific affirmative action standards provided in paragraphs 7a though p of these specifications. The goal set forth in the solicitation from which this contract resulted are expressed as percentages of the total hours of employment and training of minority and female utilization the Contractor should reasonably be able to achieve in each construction trade in which it has employees in the covered area. The Contractor is expected to make substantially uniform progress toward its goals in each craft during the period specified.

5) Neither the provisions of any collective bargaining agreement, nor the failure by a union with whom the Contractor has a collective bargaining agreement, to refer either minorities or women shall excuse the Contractor's obligations under these specification, Executive Order 11246, or the regulations promulgated pursuant thereto.

6) In order for the nonworking training hours of apprentices and the trainees to be counted in meeting the goals, such apprentices and trainees must be employed by the Contractor during the training period, and the Contractor must have made a commitment to employ the apprentices and trainees at the completion of their training, subject to the availability of employment opportunities. Trainees must be trained pursuant to training programs approved by the U.S. Department of Labor.

7) The Contractor shall take specific affirmative actions to ensure equal employment opportunity. The evaluation of the Contractor's compliance with these specifications shall be based upon its effort to achieve maximum results from its actions. The Contractor shall document these efforts fully, and shall implement affirmative action steps at least as extensive as the following:

   (a) Ensure and maintain a working environment free of harassment, intimidation, and coercion at all sites, and in all facilities at which the Contractor's employees are assigned to work. The Contractor, where possible, will assign two or more women to each construction project. The Contractor shall specifically ensure that all foremen, superintendents, and other on-site supervisory personnel are aware of and carry out the Contractor's obligation to maintain such a working environment, with specific attention to minority or female individuals working at such sites or in such facilities.

(b) Establish and maintain a current list of minority and female recruitment sources, provide written notification to minority and female recruitment sources and to community organizations when the Contractor or its unions have employment opportunities available and maintain a record of the organization's responses.

(c) Maintain a current file of the names, addresses and telephone numbers of each minority and female off-the-street applicant and minority or female referral from a union, a recruitment source or community organization and of what action was taken with respect to each such individual. If such individual was sent to the union hiring hall for referral and was not referred back to the Contractor by the union or, if referred, not employed by the Contractor, this shall be documented in the file with the reason therefor, along with whatever additional actions the Contractor may have taken.

(d) Provide immediate written notification to the Director when the union or unions with which the Contractor has a collective bargaining agreement has not referred to the Contractor a minority person or woman sent by the Contractor, or when the Contractor has other information that the union referral process has impeded the Contractor's efforts to meet its obligations.

(e) Develop on-the-job training opportunities and/or participate in training programs for the area which expressly include minorities and women, including upgrading programs and apprenticeship and trainee programs relevant to the Contractor's employment needs, especially those programs funded or approved by the Department of Labor. The contractor shall provide notice of these programs to the sources complied under 7b above.

(f) Disseminate the Contractor's EEO policy by providing notice of the policy to unions and training programs and requesting their cooperation in assisting the Contractor in meeting its EEO obligations; by including it in any policy manual and collective bargaining agreement; by publicizing it in the company newspaper, annual report, etc.; by specific review of the policy with all management personnel and with all minority and female employees at least once a year; and by posting the company EEO policy on bulletin boards accessible to all employees at each location where construction work is performed.

(g) Review, at least annually, the company's EEO policy and affirmative action obligations under these specifications with all employees having any responsibility for hiring, assignment, layoff, termination or other employment decisions including specific review of these items with on-site supervisory personnel such as Superintendents, General Foremen, etc., prior to the initiation of construction work at any job site. A written record shall be made and maintained identifying the time and place of these meetings, persons attending, subject matter discussed, and disposition of the subject matter.

(h) Disseminate the Contractor's EEO policy externally by including it in any advertising in the news media, specifically including minority and female news media, and providing written notification to and discussing the Contractor's EEO policy with other Contractors and Subcontractors with whom the Contractor does or anticipates doing business.

(i) Direct its recruitment efforts, both oral and written, to minority, female and community organizations, to schools with minority and female students and to minority and female recruitment and training organizations serving the Contractor's recruitment area and employment needs. Not later than one month prior to the date for the acceptance of applications for apprenticeship or other training by any recruitment source, the Contractor shall send written notification to organizations such as the above, describing the openings, screenings procedures, and tests to be used in the selection process.

(j) Encourage present minority and female employees to recruit other minority persons and women and, where reasonable, provide after school, summer and vacation employment to minority and female youth both on the site and in other areas of a Contractor's workforce.

(k) Validate all tests and other selection requirements where there is an obligation to do so under 41 CFR Part 60-3.

(l) Conduct, at least annually, an inventory and evaluation at least of all minority and female personnel for promotional opportunities and encourage these employees to seek or to prepare for, through appropriation training, etc., such opportunities.

(m) Ensure that seniority practices, job classifications, work assignments and other personnel practices, do not have a discriminatory effect by continually monitoring all personnel and employment related activities to ensure that the EEO policy and the Contractor's obligations under these specifications are being carried out.

(n) Ensure that all facilities and company activities are nonsegregated except that separate or single-user toilet and necessary changing facilities shall be provided to assure privacy between the sexes.

(o) Document and maintain a record of all solicitations of offers for subcontracts from minority and female construction contractors and suppliers, including circulation of solicitations to minority and female contractor associations and other business associations.

(p) Conduct a review, at least annually, of all supervisor's adherence to and performance under the Contractor's EEO policies and affirmative action obligations.

8) Contractors are encouraged to participate in voluntary associations which assist in fulfilling one or more of their affirmative action obligations (7a through p). The efforts of a contractor

association, joint contractor-union, contractor-community, or other similar group of which the contractor is a member and participant, may be asserted as fulfilling any one or more of its obligations under 7a through p of these Specifications provided that the contractor actively participates in the group, makes every effort to assure that the group has a positive impact on the employment of minorities and women in the industry, ensures that the concrete benefits of the program are reflected in the Contractor's minority and female workforce participation, makes a good faith effort to meet its individual goals and timetables, and can provide access to documentation which demonstrates the effectiveness of actions taken on behalf of the Contractor. The obligation to comply, however, is the Contractor's and failure of such a group to fulfill an obligation shall not be a defense for the Contractor's noncompliance.

9) A single goal for minorities and a separate single goal for women have been established. The Contractor, however, is required to provide equal employment opportunity and to take affirmative action for all minority groups, both male and female, and all women, both minority and non-minority. Consequently, the Contractor may be in violation of the Executive Order if a particular group is employed in a substantially disparate manner (for example, even though the Contractor has achieved its goals for women, generally, the Contractor may be in violation of the Executive Order if a specific minority group of women is underutilized).

10) The Contractor shall not use the goals and timetables or affirmative action standards to discriminate against any person because of age, race, color, religion, sex, national origin or disability.

11) The Contractor shall not enter into any Subcontract with any person or firm debarred from Government contracts pursuant to Executive Order 11246.

12) The Contractor shall carry out such sanctions and penalties for violations of these specifications and of the Equal Opportunity Clause, including suspension, termination and cancellation of existing subcontracts as may be imposed or ordered pursuant to Executive Order 11246, as amended, and its implementing regulations, by the Office of Federal Contract Compliance Programs. Any Contractor who fails to carry out such sanctions and penalties shall be in violation of these specifications and Executive Order 11246, as amended.

13) The Contractor, in fulfilling its obligations under these specifications, shall implement' specific affirmative action steps, at least as extensive as those standards prescribed in paragraph 7 of these specifications, so as to achieve maximum results from its efforts to ensure equal employment opportunity. If the Contractor fails to comply with the requirements of the Executive Order, the implementing regulations, or these specifications, the Director shall proceed in accordance with 41 CFR 60-4.8.

14) The Contractor shall designate a responsible official to monitor all employment related activity to ensure that the company EEO policy is being carried out, to submit reports relating to the provisions hereof as may be required by the Government and to keep records. Records

shall at least include for each employee the name, address, telephone numbers, construction trade, union affiliation if any, employee identification number when assigned, social security number, race, sex, status (e.g., mechanic, apprentice, trainee, helper, or laborer), dates of changes in status, hours worked per week in the indicated trade, rate of pay, and locations at which the work was performed. Records shall be maintained in an easily understandable and retrievable form; however, to the degree that existing records satisfy this requirement, contractors shall not be required to maintain separate records.

15) Nothing herein provided shall be construed as a limitation upon the application of other laws which establish different standards of compliance or upon the application of requirements for the hiring of local or other area residents (e.g., those under the Public Works Employment Act of 1977 and the Community Development Block Grant Program).

S T A T E **O F** **T E N N E S S E E**

March 1, 2006

SPECIAL PROVISION

REGARDING

NOTICE OF REQUIREMENT FOR AFFIRMATIVE ACTION

TO ENSURE EQUAL EMPLOYMENT OPPORTUNITY (EXECUTIVE ORDER 11246)

1. The Bidder's attention is called to the "Equal Opportunity Clause" and the "Standard Federal Equal Employment Opportunity Construction Contract Specifications" set forth herein.

2. The goals for minority and female participation, expressed in percentage terms for the Contractor's aggregate workforce in each trade on all construction work are as follows:

County	Goals for Female Participation in each Trade
All Counties	6.9

County	Goals for Minority Participation for each Trade
Lincoln	11.2
Hamilton, Marion, Sequatchie	12.5
Bledsoe, Bradley, Grundy, McMinn, Meigs, Monroe, Polk, Rhea	8.6
Carter, Hawkins, Sullivan, Unicoi, Washington	2.6
Greene, Hancock, Johnson	3.2
Anderson, Blount, Knox, Union	6.6
Campbell, Claiborne, Cocke, Cumberland, Fentress, Grainger, Hamblen, Jefferson, Loudon, Morgan, Roane, Scott, Sevier	4.5

County	Goals for Minority Participation for each Trade
Montgomery	18.2
Davidson, Cheatham, Dickson, Robertson, Sumner, Williamson, Wilson, Rutherford	15.8
Bedford, Cannon, Clay, Coffee, Dekalb, Franklin, Giles, Hickman, Houston, Humphreys, Jackson, Lawrence, Lewis, Macon, Marshall, Maury, Moore, Overton, Perry, Pickett, Putnam, Smith, Stewart, Trousdale, Van Buren, Warren, Wayne, White	12.0
Shelby, Tipton	32.3
Benton, Carroll, Chester, Crockett, Decatur, Dyer, Fayette, Gibson, Hardeman, Hardin, Haywood, Henderson, Henry, Lake, Lauderdale, McNairy, Madison, Obion, Weakley	26.5

These goals are applicable to all the Contractor's construction work whether or not it is Federal or federally assisted.

The Contractor's compliance with the Executive Order and the regulations in 41 CFR Part 60-4 shall be based on its implementation of the Equal Opportunity Clause, specific affirmative action obligations required by the specifications set forth in CFR Part 60-4.3(a), and its efforts to meet the goals established for the geographical area where the contract resulting from this solicitation is to be performed. The hours of minority and female employment and training must be substantially uniform through- out the length of the contract, and in each trade, and the Contractor shall make a good faith effort to employ minorities and women evenly on each of its projects. The transfer of minority or female employees or trainees from Contractor to Contractor or from Project to Project for the sole purpose of meeting the Contractor's goals shall be a violation of the contract, the Executive Order and the regulations in 41 CFR Part 60-4. Compliance with the goals will be measured against the total work hours performed.

3. The Contractor shall provide written notification to the Office of Federal Contract Compliance Programs at the following address within 10 working days of award of any construction subcontract in excess of $10,000 at any tier for construction work under the contract resulting from this solicitation:

Associate Regional Director
Office of Federal Contract Compliance Program
1371 Peachtree Street, N.E., Room 111
Atlanta, GA 30367

The notification shall list the name, address and telephone number of the subcontractor; employer identification number; estimated dollar amount of the subcontract; estimated starting and completion dates of the subcontract; and the geographical area in which the contract is to be performed.

S T A T E **O F** **T E N N E S S E E**

(Rev. 06-01-03) March 1, 2006
(Rev. 06-23-08)
(Rev. 11-10-08)

SPECIAL PROVISION

REGARDING

DISADVANTAGED BUSINESS ENTERPRISE PARTICIPATION

Disadvantaged Business Enterprises (DBE) as defined in 49 CFR Part 23/26 shall have the maximum opportunity to participate in the performance of contracts let by the Department. Consequently, the disadvantaged business enterprise requirements of 49 CFR Part 23/26 apply to this contract.

Disadvantaged Business Enterprises (DBE) as defined in 49 CFR Part 23/26 shall have the maximum opportunity to participate in the performance of this contract or in the performance of subcontracts to this contract. In this latter regard, the Contractor shall take all necessary and reasonable steps in accordance with 49 CFR Part 23/26 to ensure that disadvantaged enterprises, including enterprises owned and controlled by women, have the maximum opportunity to compete for and perform subcontracts. The Contractor shall not discriminate on the basis of age, race, color, religion, national origin, sex or disability in the award of subcontracts.

The Contractor shall submit to the Civil Rights Office Small Business Development Program copies of any agreements with DBE/WBEs upon execution.

The Contractor is advised that failure to carry out the requirements as set forth above shall constitute a breach of contract, and after notification by the Department, may result in termination of the contract or other remedy deemed appropriate by the Department.

S T A T E O F T E N N E S S E E

(Rev. 12-01-06)
(Rev. 11-10-08)
(Rev. 9-17-11)

March 1, 2006

SPECIAL PROVISION

REGARDING

DBE CONTRACT GOAL

All contractors shall pursue affirmative action requirements to encourage and increase participation of disadvantaged individuals in business enterprises as set forth in this specification which is imposed pursuant to 49 CFR 26. The bidder shall arrange for _2_ percent of the work to be performed by Disadvantaged Business Enterprises (DBEs) or clearly demonstrate adequate good faith efforts as described herein.

A. Disadvantaged Business Enterprise Policy.

The Contractor shall accept as operating policy and include in all subcontract agreements the following statement, which is designed to promote full participation of DBEs as suppliers and subcontractors through a continuous, positive result-oriented program on contracts let by the Department:

> The Contractor, sub recipient or subcontractor shall not discriminate on the basis of race, color, national origin, or sex in the performance of this contract. The Contractor shall carry out applicable requirements of 49 CFR part 26 in the award and administration of Department assisted contracts. Failure by the Contractor to carry out these requirements is a material breach of this contract, which may result in the termination of this contract or such other remedy, as the Department deems appropriate.

B. Counting DBE Participation Toward Meeting Goals.

The Contractor shall count DBE participation toward goals in accordance with 49 CFR 26. The Contractor may count toward the goals only expenditures to DBEs that perform a commercially useful function of a contract, including those functions as a subcontractor. A DBE performs a commercially useful function when it is responsible for execution of the work of the contract and is carrying out its responsibilities by actually performing, managing, and supervising the work involved. To perform a commercially useful function, the DBE must also be responsible, with respect to materials and supplies used on the contract, for negotiating price, determining quality and quantity, ordering the material, and installing (where applicable) and paying for the material itself. Work performed by a DBE firm

in a particular transaction may be counted toward the goal only if the Department determines that it involves a commercially useful function. The work performed by the DBE firm shall be necessary and useful to the completion of the contract, and consistent with normal highway construction industry practices in Tennessee. The bidder may count the following DBE expenditures towards the DBE commitment:

1. Projects where the DBE is the Prime Contractor - The portions of the contract to be completed by certified DBE firms will be counted toward meeting the goal. Items of the contract subcontracted to non-DBE firms will not be counted in the commitment.

2. Portions of a bid from a Joint Venture - A bid from a joint venture, between a DBE and non-DBE Contractor, shall include a "Statement of DBE Commitments" which must be approved by the Department prior to the Letting. Only the DBE's portion will be counted toward the goal. Joint venture agreements have to be approved separately from the bid documents, prior to the awarding of the contract.

3. DBE Subcontractors - The DBE subcontractor shall assume actual and contractual responsibility for provision of materials and supplies, subcontracted work, or other commercially useful functions of the items of work subcontracted to them. Cost of materials purchased from or the cost of equipment leased from the Contractor will not count toward the project DBE commitment. Prior written approval must be obtained from the Department's Civil Rights Office - Small Business Development Program (CRO - SBDP) for any DBE use of prime contractor's personnel or equipment.

4. Manufacturers - The Contractor may count toward the DBE commitment 100% of its expenditures for materials and supplies required under a contract and obtained from a DBE manufacturer only if the DBE firm produces and supplies goods manufactured from raw materials or substantially alters them before resale.

5. Regular Dealers (e.g. Material Suppliers) - The Contractor may count toward the DBE goal 60% of its expenditures for materials and supplies required under a contract and obtained from a DBE regular dealer only if the DBE firm performs a commercially useful function in the supply process. For purposes of this section, a regular dealer is a firm that owns; operates; or maintains a store, warehouse, or other establishment in which materials or supplies required for the performance of the contract are bought, kept in stock, and regularly sold to the public in the usual course of business. To be a regular dealer, the firm shall engage in, as its principal business and in its own name, the purchase and sale of the products in question. A regular dealer in such bulk items as steel, cement, gravel, stone, and petroleum products need not keep such products in stock if it owns or operates the distribution equipment. If the DBE supplier does not own the distribution equipment, a lease containing the terms of the agreement shall be available and must be approved in writing by the CRO - SBDP.

6. Brokers and Packagers - Brokers and packagers will not be regarded as regular dealers within the meaning of this section. Only the cost of the service performed may be used towards meeting the DBE commitment.

7. Transportation or Hauling of Materials –The Department will continue to utilize the trucking regulations, under 49 CFR 26.55. This regulation allows for DBE goal hauling-credit in either DBE trucks or in trucks leased to or by DBE firms. The verification of truck drivers employed by DBE firms will continue to be by submission of payrolls independent from any Davis-Bacon regulations.

   a) The DBE must be responsible for the management and supervision of the entire trucking operation for which it is responsible on a particular contract, and there cannot be a contrived arrangement for the purpose of meeting DBE goals.
   b) The DBE must itself own and operate at least one fully licensed, insured, and operational truck used on the contract.
   c) The DBE receives credit for the total value of the transportation services it provides on the contract using trucks it owns, insures, and operates using drivers it employs.
   d) The DBE may lease trucks from another DBE firm, including an owner-operator who is certified as a DBE. The DBE who leases trucks from DBE receives credit for the total value of the transportation services the lessee DBE provides on the contract.
   e) The DBE may also lease trucks from a non-DBE firm, including an owner-operator. The DBE who leases trucks from a non-DBE is entitled to the total value of transportation services provided by non-DBE lessees not to exceed the value of transportation services provided by DBE-owned trucks on the contract. Additional participation by non-DBE lessees receives credit only for the fee or commission it receives as a result of the lease arrangement.
   f) For purposes of this paragraph a lease must indicate that the DBE has exclusive use of and control over the truck. Leases cannot be Department contract-specific, must be long term, and must be approved by the CRO - SBDP Staff. This does not preclude the leased truck from working for others during the term of the lease with the consent of the DBE, so long as the lease gives the DBE absolute priority for use of the leased truck. Leased trucks must display the name and identification number of the DBE.

   g) Prior to hauling, the Contractor and DBE shall provide the Department's Project Supervisor a complete list of trucks that will be used on the project for DBE goal participation. The Department will provide a form that shall be used by the Contractor and DBE to identify the trucks. A revised list will be required any time the trucks used changes. The Contractor and DBE must be able to adequately document the actual amount of hauling eligible for DBE goal participation.

7. Contracted Labor / Temporary Employment Agencies – utilization of these services via subcontract will be allowed to count toward DBE goal commitment, in accordance with 49 CFR part 26.55. The Department will count the entire amount of fees or commissions charged by a DBE for providing a bona fide service. Provided, the Department must find the fee to be reasonable and not excessive as compared to the fees customarily allowed for similar services.

8. Other Commercially Useful Functions - The fees paid to certified DBE firms, which are necessary for the completion of the contract and commonplace outside of the DBE program, may be counted towards the commitment.

C. Contract Award Procedures

The established DBE goal will be shown on the proposal as a percent of the total amount bid. If the total proposed DBE work submitted with the bid is less than the percentage of participation goals set by the Department, the bidder shall, within three (3) business days from the bid openings, propose sufficient additional DBE participation to meet the goal or shall clearly demonstrate by documentation that good faith efforts were made to meet the goal.

1. Bidder' Responsibility.

It is the bidder's responsibility to determine the level of professional competence and financial responsibility of any proposed DBE subcontractor. The bidder shall ascertain that the proposed DBE subcontractor has suitable experience and equipment to perform a commercially useful function for work that is common industry practice in the Tennessee highway construction industry.

Contractor shall develop and maintain records of negotiations with DBEs to reach agreeable prices, quotations and work schedules, including but not limited to a record of dates when the Contractor first contacted each DBE.

2. Proposals With Established Project DBE Goals.

For proposals with established project goals, the bidder will be required to complete computer generated Form 1247A. The bidder shall list the following information on Form 1247A that is submitted:

a. All DBE firms being used or being considered for use as part of the bidder's DBE commitment.
b. The type of work items on the contract for which the DBE will be used.
c. The "Amount to DBE" which has been committed to each DBE firm which will be used on the contract.

The completed 1247A form shall be submitted within three (3) business days of the Letting. Failure to provide a completed form or documentation clearly evidencing a good faith effort, as detailed in C.3. below, within three (3) business days of the Letting may cause the bid to be rejected as irregular. Only certified DBE firms may

be used. Contractor may access this information on the DBE list by viewing the Department's website or the certified DBE listing.

When DBE goal projects are involved and the prime contractor subcontracts to a non DBE, and the non-DBE subcontractor in turn subcontracts to a DBE as a second tier subcontractor, the prime contractor must affirm in writing his/her knowledge and approval of such an arrangement. Recognition of a second tier arrangement with a DBE subcontractor for goal work must be forwarded to the Director of the CRO - SBDP for verification, in writing, prior to any work performed by the DBE being counted toward the goal.

3. Bidder Selection and Good Faith Efforts

a. Bidders shall submit proposals that meet the DBE goal or shall submit documentation clearly evidencing that they made good faith effort to meet the DBE goal. Contractors who meet or exceed the contract goal will be assumed to have made good faith efforts to utilize DBE firms. DBE firms who bid as prime contractors will be considered to have met the goal.

b. The following are illustrative of factors which will be considered in determining whether the bidder has made adequate good faith efforts:

1) Whether the bidder selected portions of the work likely to attract DBE participation. The total dollar value of the portions selected should meet or exceed the contract DBE goal. If it is necessary, the bidder should break down subcontracts into economically feasible units in order to facilitate participation.

2) Whether the bidder provided notice to a reasonable number of specific DBEs, including those not regularly used by the bidder, that their participation in the contract is being solicited in sufficient time to allow them to participate effectively.

3) Whether the bidder provided interested DBEs with adequate information about the plans, specifications and requirements of the contract.

4) Whether the bidder advertised in general circulation, trade association, or minority-focus media concerning participation opportunities or effectively used the services of available minority, community organizations, minority contractors groups, local, state or federal minority business assistance offices, or other organizations that provide assistance in the recruitment and placement of DBEs.

5) Whether the bidder negotiated in good faith with interested DBEs, not rejecting DBEs as unqualified without sound reasons based on a thorough investigation of their capabilities.

6) Whether the bidder made efforts to assist interested DBEs in obtaining bonding or insurance required by the bidder.

7) Whether the bidder submitted all quotations received from DBEs, and for those quotations not accepted, an explanation of why the DBE was not accepted including price comparisons. Receipt of a lower quotation from a non-DBE will not in itself excuse a bidder's failure to meet contract goal.

8) Whether the bidder has adequate records of its contacts and negotiations with DBEs

c) If the Contractor has not met the DBE goal or submitted documentation clearly evidencing good faith efforts within three (3) business days after the bid opening, the Contractor's bid will be considered non-responsive and the Department may consider the next lowest responsive bid for award.

d) Failure of the bidder to meet the DBE goal in its bid or failure to provide documentation clearly evidencing good faith efforts to meet the goal, may be cause for the forfeiture of the Proposal Guaranty which shall become the property of the Department, not as penalty, but in liquidation of damages sustained.

As soon as practical after award of the contract, the contractor shall submit copies of all binding subcontracts and purchase orders with DBEs to the Project Supervisor and the CRO - SBDP Director. No progress estimate shall be processed until this information is received.

4. Joint Checking Allowance for DBE

A DBE must receive pre-approval by the Department before using a joint check. Joint check requests shall be submitted, by the DBE, to the CRO - SBDP prior to the contract agreement.

The following are some general conditions that must be met regarding joint check use:

a. The second party (typically the prime contractor) acts solely as a guarantor.
b. The DBE must release the check to the supplier.
c. The use of joint checks must be a commonly recognized business practice in the industry.
d. The DBE remains responsible for all other elements of 49 CFR 26.55(c)(1)
e. The DBE is not required to use a specific supplier nor the prime contractor's negotiated unit price.
f. The DBE shall submit receipt/copy of cancelled checks to the CRO - SBDP.

D. Construction Period Requirements.

1. After adequate notice by the Contractor, if any DBE is unable to perform work committed toward the goal, the DBE shall provide to the CRO - SBDP a signed statement saying why they are unable to complete the work. The Contractor shall document their efforts to have another DBE perform the item or to have a DBE perform other items to replace the original DBE commitment amounts. In the event the Contractor is not able to find replacement DBE work, the Contractor must provide the CRO - SBDP documentation clearly evidencing good faith efforts, as detailed in C.3. above. Any request for substitution of a DBE subcontractor shall be made to the Department and approved by the CRO - SBDP.

2. Brokering of work by DBEs is not allowed and is a material breach of contract. A DBE firm involved in brokering of work may have their certification removed or suspended. Any firm involved in brokering of work that engages in willful falsification distortion, or misrepresentation with respect to any facts related to the project shall be referred to the U. S. Department of Transportation's Office of the Inspector General for prosecution under Title 18, U. S. Code, Section 100.20. Contractor shall place this provision in all subcontracts with DBEs.

3. A Department Project Supervisor/Inspector shall complete a Commercially Useful Function (CUF) Checklist to document the first date of work, work items, equipment, and forces of each DBE.

4. The Contractor shall provide monthly payment certification to the Department entitled "Prompt Payment Certification Form." The Department shall provide Contractor with the Prompt Payment Certification Form. An officer of the contractor shall sign the Prompt Payment Certification Form. The Department will hold estimate payments if information is not submitted. Reasons for non payment to a DBE could include the following:
   a) Whether the DBE is performing satisfactorily;
   b) Whether Contractor has reason to believe the DBE is not performing a commercially useful function, and if so, why and what steps Contractor is taking to rectify the situation.

   In the event the Contractor promptly reports questions on the Prompt Payment Certification Form regarding whether a DBE is independent and performing a commercially useful function and takes appropriate steps promptly to address the issue, then the Department will take this effort into account when considering contractor compliance measures as described below.

E. Post Construction Requirements.

Prior to receiving final payment, the Contractor shall provide to the Engineer certification of the dollars paid to each DBE firm, using Form CC3, Certification of DBE Accomplishment. The certification shall be dated and signed by a responsible officer of the contractor and by the DBE. Falsification of this certification will result in suspension of bidder qualifications.

The final estimate will not be paid to the Contractor until proper certifications have been made.

F. Required Records.

The Prime Contractor and all subcontractors shall retain, for a period of not less than 3 years after final acceptance of a project, copies of canceled checks or other documentation that substantiates payments to DBE firms. These records shall be available at reasonable times and places for inspection by authorized representatives of the Department and Federal Agencies.

G. Contractor Compliance

1. It is the intent of this Special Provision to require the Contractor to take full responsibility for the performance of a commercially useful function by all DBE subcontractors, manufacturers and materials suppliers who work on the project and are counted by the Contractor toward the project DBE goal. A DBE is considered to perform a commercially useful function when it is responsible for execution of a distinct element of the work of a contract and carrying out its responsibilities by actually performing, managing and supervising the work involved (49 CFR Part 26).

2. If the Contractor fails to comply with this Special Provision 1247, the Department may take one or a combination of the following steps:

    1) Require the Contractor to have its entire management staff attend DBE training arranged by the Department and paid by the Contractor.

    2) The next bid when Contractor is the low bidder on a DBE goal project, require that Contractor shall achieve a DBE participation that is twice the stated goals.

    3) For the Contractor's failure to find another DBE subcontractor to substitute for a DBE that is terminated or fails to complete its work on the contract for any reason or to provide the CRO - SBDP documentation clearly evidencing good faith efforts, as detailed in D.1. above, then the Department may withhold from the Contractor an amount not to exceed the amount of money originally committed to the non-complying DBE subcontractor, not as a penalty but as liquidated damages.

    4) Suspend the Contractor from participation in Department bid lettings pursuant to rules promulgated by the Department.

    5) For repeated failures to comply, debar the Contractor pursuant to rules promulgated by the Department.

    6) Invoke other remedies available by law and/or in the contract.

    7) Invoke remedy agreed upon by the Commissioner and Contractor in writing.

REQUIRED CONTRACT PROVISIONS FEDERAL-AID CONSTRUCTION CONTRACTS

		Page
I.	General	1
II.	Nondiscrimination	1
III.	Nonsegregated Facilities	4
IV.	Payment of Predetermined Minimum Wage	4
V.	Statements and Payrolls	7
VI.	Record of Materials, Supplies, and Labor	8
VII.	Subletting or Assigning the Contract	8
VIII.	Safety: Accident Prevention	9
IX.	False Statements Concerning Highway Projects	9
X.	Implementation of Clean Air Act and Federal Water Pollution Control Act	10
XI.	Certification Regarding Debarment, Suspension, Ineligibility, and Voluntary Exclusion	10
XII.	Certification Regarding Use of Contract Funds for Lobbying	12

I. GENERAL

1. These contract provisions shall apply to all work performed on the contract by the contractor's own organization and with the assistance of workers under the contractor's immediate superintendence and to all work performed on the contract by piecework, station work, or by subcontract.

2. Except as otherwise provided for in each section, the contractor shall insert in each subcontract all of the stipulations contained in these Required Contract Provisions, and further require their inclusion in any lower tier subcontract or purchase order that may in turn be made. The Required Contract Provisions shall not be incorporated by reference in any case. The prime contractor shall be responsible for compliance by any subcontractor or lower tier subcontractor with these Required Contract Provisions.

3. A breach of any of the stipulations contained in these Required Contract Provisions shall be sufficient grounds for termination of the contract.

4. A breach of the following clauses of the Required Contract Provisions may also be grounds for debarment as provided in 29 CFR 5.12:

Section I, paragraph 2;
Section IV, paragraphs 1, 2, 3, 4, and 7;
Section V, paragraphs 1 and 2a through 2g.

5. Disputes arising out of the labor standards provisions of Section IV (except paragraph 5) and Section V of these Required Contract Provisions shall not be subject to the general disputes clause of this contract. Such disputes shall be resolved in accordance with the procedures of the U.S. Department of Labor (DOL) as set forth in 29 CFR 5, 6, and 7. Disputes within the meaning of this clause include disputes between the contractor (or any of its subcontractors) and the contracting agency, the DOL, or the contractor's employees or their representatives.

6. Selection of Labor: During the performance of this contract, the contractor shall not:

a. discriminate against labor from any other State, possession, or territory of the United States (except for employment preference for Appalachian contracts, when applicable, as specified in Attachment A), or

b. employ convict labor for any purpose within the limits of the project unless it is labor performed by convicts who are on parole, supervised release, or probation.

II. NONDISCRIMINATION

(Applicable to all Federal-aid construction contracts and to all related subcontracts of $10,000 or more.)

1. **Equal Employment Opportunity:** Equal employment opportunity (EEO) requirements not to discriminate and to take affirmative action to assure equal opportunity as set forth under laws, executive orders, rules, regulations (28 CFR 35, 29 CFR 1630 and 41 CFR 60) and orders of the Secretary of Labor as modified by the provisions prescribed herein, and imposed pursuant to 23 U.S.C. 140 shall constitute the EEO and specific affirmative action standards for the contractor's project activities under this contract. The Equal Opportunity Construction Contract Specifications set forth under 41 CFR 60-4.3 and the provisions of the American Disabilities Act of 1990 (42 U.S.C. 12101 et seq.) set forth under 28 CFR 35 and 29 CFR 1630 are incorporated by reference in this contract. In the execution of this contract, the contractor agrees to comply with the following minimum specific requirement activities of EEO:

a. The contractor will work with the State highway agency (SHA) and the Federal Government in carrying out EEO obligations and in their review of his/her activities under the contract.

b. The contractor will accept as his operating policy the following statement:

> "It is the policy of this Company to assure that applicants are employed, and that employees are treated during employment, without regard to their race, religion, sex, color, national origin, age or disability. Such action shall include: employment, upgrading, demotion, or transfer; recruitment or recruitment advertising; layoff or termination; rates of pay or other forms of compensation; and selection for training, including apprenticeship, preapprenticeship, and/or on-the-job training."

2. **EEO Officer:** The contractor will designate and make known to the SHA contracting officers an EEO Officer who will have the responsibility for and must be capable of effectively administering and promoting an active contractor program of EEO and who must be assigned adequate authority and responsibility to do so.

3. **Dissemination of Policy:** All members of the contractor's staff who are authorized to hire, supervise, promote, and discharge employees, or who recommend such action, or who are substantially involved in such action, will be made fully cognizant of, and will implement, the contractor's EEO policy and contractual responsibilities to provide EEO in each grade and classification of employment. To ensure that the above agreement will be met, the following actions will be taken as a minimum:

a. Periodic meetings of supervisory and personnel office employees will be conducted before the start of work and then not less often than once every six months, at which time the contractor's EEO policy and its implementation will be reviewed and explained. The meetings will be conducted by the EEO Officer.

b. All new supervisory or personnel office employees will be given a thorough indoctrination by the EEO Officer, covering all major aspects of the contractor's EEO obligations within thirty days following their reporting for duty with the contractor.

c. All personnel who are engaged in direct recruitment for the project will be instructed by the EEO Officer in the contractor's procedures for locating and hiring minority group employees.

d. Notices and posters setting forth the contractor's EEO policy will be placed in areas readily accessible to employees, applicants for employment and potential employees.

e. The contractor's EEO policy and the procedures to implement such policy will be brought to the attention of employees by means of meetings, employee handbooks, or other appropriate means.

4. **Recruitment:** When advertising for employees, the contractor will include in all advertisements for employees the notation: "An Equal Opportunity Employer." All such advertisements will be placed in publications having a large circulation among minority groups in the area from which the project work force would normally be derived.

a. The contractor will, unless precluded by a valid bargaining agreement, conduct systematic and direct recruitment through public and private employee referral sources likely to yield qualified minority group applicants. To meet this requirement, the contractor will identify sources of potential minority group employees, and establish with such identified sources procedures whereby minority group applicants may be referred to the contractor for employment consideration.

b. In the event the contractor has a valid bargaining agreement providing for exclusive hiring hall referrals, he is expected to observe the provisions of that agreement to the extent that the system permits the contractor's compliance with EEO contract provisions. (The DOL has held that where implementation of such agreements have the effect of discriminating against minorities or women, or obligates the contractor to do the same, such implementation violates Executive Order 11246, as amended.)

c. The contractor will encourage his present employees to refer minority group applicants for employment. Information and procedures with regard to referring minority group applicants will be discussed with employees.

5. **Personnel Actions:** Wages, working conditions, and employee benefits shall be established and administered, and personnel actions of every type, including hiring, upgrading, promotion, transfer, demotion, layoff, and termination, shall be taken without regard to race, color, religion, sex, national origin, age or disability. The following procedures shall be followed:

a. The contractor will conduct periodic inspections of project sites to insure that working conditions and employee facilities do not indicate discriminatory treatment of project site personnel.

b. The contractor will periodically evaluate the spread of wages paid within each classification to determine any evidence of discriminatory wage practices.

c. The contractor will periodically review selected personnel actions in depth to determine whether there is evidence of discrimination. Where evidence is found, the contractor will promptly take corrective action. If the review indicates that the discrimination may extend beyond the actions reviewed, such corrective action shall include all affected persons.

d. The contractor will promptly investigate all complaints of alleged discrimination made to the contractor in connection with his obligations under this contract, will attempt to resolve such complaints, and will take appropriate corrective action within a reasonable time. If the investigation indicates that the discrimination may affect persons other than the complainant, such corrective action shall include such other persons. Upon completion of each investigation, the contractor will inform every complainant of all of his avenues of appeal.

6. **Training and Promotion:**

a. The contractor will assist in locating, qualifying, and increasing the skills of minority group and women employees, and applicants for employment.

b. Consistent with the contractor's work force requirements and as permissible under Federal and State regulations, the contractor shall make full use of training programs, i.e., apprenticeship, and on-the-job training programs for the geographical area of contract performance. Where feasible, 25 percent of apprentices or trainees in each occupation shall be in their first year of apprenticeship or training. In the event a special provision for training is provided under this contract, this subparagraph will be superseded as indicated in the special provision.

c. The contractor will advise employees and applicants for employment of available training programs and entrance requirements for each.

d. The contractor will periodically review the training and promotion potential of minority group and women employees and will encourage eligible employees to apply for such training and promotion.

7. **Unions:** If the contractor relies in whole or in part upon unions as a source of employees, the contractor will use his/her best efforts to obtain the cooperation of such unions to increase opportunities for minority groups and women within the unions, and to effect referrals by such unions of minority and female employees. Actions by the contractor either directly or through a contractor's association acting as agent will include the procedures set forth below:

a. The contractor will use best efforts to develop, in cooperation with the unions, joint training programs aimed toward qualifying more minority group members and women for membership in the unions and increasing the skills of minority group employees and women so that they may qualify for higher paying employment.

b. The contractor will use best efforts to incorporate an EEO clause into each union agreement to the end that such union will be contractually bound to refer applicants without regard to their race, color, religion, sex, national origin, age or disability.

c. The contractor is to obtain information as to the referral practices and policies of the labor union except that to the extent such information is within the exclusive possession of the labor union and such labor union refuses to furnish such information to the contractor, the contractor shall so certify to the SHA and shall set forth what efforts have been made to obtain such information.

d. In the event the union is unable to provide the contractor with a reasonable flow of minority and women referrals within the time limit set forth in the collective bargaining agreement, the contractor will, through independent recruitment efforts, fill the employment vacancies without regard to race, color, religion, sex, national origin, age or disability; making full efforts to obtain qualified and/or qualifiable minority group persons and women. (The DOL has held that it shall be no excuse that the union with which the contractor has a collective bargaining agreement providing for exclusive referral failed to refer minority employees.) In the event the union referral practice prevents the contractor from meeting the obligations pursuant to Executive Order 11246, as amended, and these special provisions, such contractor shall immediately notify the SHA.

8. **Selection of Subcontractors, Procurement of Materials and Leasing of Equipment:** The contractor shall not discriminate on the grounds of race, color, religion, sex, national origin, age or disability in the selection and retention of subcontractors, including procurement of materials and leases of equipment.

a. The contractor shall notify all potential subcontractors and suppliers of his/her EEO obligations under this contract.

b. Disadvantaged business enterprises (DBE), as defined in 49 CFR 23, shall have equal opportunity to compete for and perform subcontracts which the contractor enters into pursuant to this contract. The contractor will use his best efforts to solicit bids from and to utilize DBE subcontractors or subcontractors with meaningful minority group and female representation among their employees. Contractors shall obtain lists of DBE construction firms from SHA personnel.

c. The contractor will use his best efforts to ensure subcontractor compliance with their EEO obligations.

9. **Records and Reports:** The contractor shall keep such records as necessary to document compliance with the EEO requirements. Such records shall be retained for a period of three years following completion of the contract work and shall be available at reasonable times and places for inspection by authorized representatives of the SHA and the FHWA.

a. The records kept by the contractor shall document the following:

(1) The number of minority and non-minority group members and women employed in each work classification on the project;

(2) The progress and efforts being made in cooperation with unions, when applicable, to increase employment opportunities for minorities and women;

(3) The progress and efforts being made in locating, hiring, training, qualifying, and upgrading minority and female employees; and

(4) The progress and efforts being made in securing the services of DBE subcontractors or subcontractors with meaningful minority and female representation among their employees.

b. The contractors will submit an annual report to the SHA each July for the duration of the project, indicating the number of minority, women, and non-minority group employees currently engaged in each work classification required by the contract work. This information is to be reported on Form FHWA-1391. If on-the-job training is being required by special provision, the contractor will be required to collect and report training data.

III. NONSEGREGATED FACILITIES

(Applicable to all Federal-aid construction contracts and to all related subcontracts of $10,000 or more.)

a. By submission of this bid, the execution of this contract or subcontract, or the consummation of this material supply agreement or purchase order, as appropriate, the bidder, Federal-aid construction contractor, subcontractor, material supplier, or vendor, as appropriate, certifies that the firm does not maintain or provide for its employees any segregated facilities at any of its establishments, and that the firm does not permit its employees to perform their services at any location, under its control, where segregated facilities are maintained. The firm agrees that a breach of this certification is a violation of the EEO provisions of this contract. The firm further certifies that no employee will be denied access to adequate facilities on the basis of sex or disability.

b. As used in this certification, the term "segregated facilities" means any waiting rooms, work areas, restrooms and washrooms, restaurants and other eating areas, timeclocks, locker rooms, and other storage or dressing areas, parking lots, drinking fountains, recreation or entertainment areas, transportation, and housing facilities provided for employees which are segregated by explicit directive, or are, in fact, segregated on the basis of race, color, religion, national origin, age or disability, because of habit, local custom, or otherwise. The only exception will be for the disabled when the demands for accessibility override (e.g. disabled parking).

c. The contractor agrees that it has obtained or will obtain identical certification from proposed subcontractors or material suppliers prior to award of subcontracts or consummation of material supply agreements of $10,000 or more and that it will retain such certifications in its files.

IV. PAYMENT OF PREDETERMINED MINIMUM WAGE

(Applicable to all Federal-aid construction contracts exceeding $2,000 and to all related subcontracts, except for projects located on roadways classified as local roads or rural minor collectors, which are exempt.)

1. **General:**

a. All mechanics and laborers employed or working upon the site of the work will be paid unconditionally and not less often than once a week and without subsequent deduction or rebate on any account [except such payroll deductions as are permitted by regulations (29 CFR 3) issued by the Secretary of Labor under the Copeland Act (40 U.S.C. 276c)] the full amounts of wages and bona fide fringe benefits (or cash equivalents thereof) due at time of payment. The payment shall be computed at wage rates not less than those contained in the wage determination of the Secretary of Labor (hereinafter "the wage determination") which is attached hereto and made a part hereof, regardless of any contractual relationship which may be alleged to exist between the contractor or its subcontractors and such laborers and mechanics. The wage determination (including any additional classifications and wage rates conformed under paragraph 2 of this Section IV and the DOL poster (WH-1321) or Form FHWA-1495) shall be posted at all times by the contractor and its subcontractors at the site of the work in a prominent and accessible place where it can be easily seen by the workers. For the purpose of this Section, contributions made or costs reasonably anticipated for bona fide fringe benefits under Section 1(b)(2) of the Davis-Bacon Act (40 U.S.C. 276a) on behalf of laborers or mechanics are considered wages paid to such laborers or mechanics, subject to the provisions of Section IV, paragraph 3b, hereof. Also, for the purpose of this Section, regular contributions made or costs incurred for more than a weekly period (but not less often than quarterly) under plans, funds, or programs, which cover the particular weekly period, are deemed to be constructively made or incurred during such weekly period. Such laborers and mechanics shall be paid the appropriate wage rate and fringe benefits on the wage determination for the classification of work actually performed, without regard to skill, except as provided in paragraphs 4 and 5 of this Section IV.

b. Laborers or mechanics performing work in more than one classification may be compensated at the rate specified for each classification for the time actually worked therein, provided, that the employer's payroll records accurately set forth the time spent in each classification in which work is performed.

c. All rulings and interpretations of the Davis-Bacon Act and related acts contained in 29 CFR 1, 3, and 5 are herein incorporated by reference in this contract.

2. **Classification:**

a. The SHA contracting officer shall require that any class of laborers or mechanics employed under the contract, which is not listed in the wage determination, shall be classified in conformance with the wage determination.

b. The contracting officer shall approve an additional classification, wage rate and fringe benefits only when the following criteria have been met:

(1) the work to be performed by the additional classification requested is not performed by a classification in the wage determination;

(2) the additional classification is utilized in the area by the construction industry;

(3) the proposed wage rate, including any bona fide fringe benefits, bears a reasonable relationship to the wage rates contained in the wage determination; and

(4) with respect to helpers, when such a classification prevails in the area in which the work is performed.

c. If the contractor or subcontractors, as appropriate, the laborers and mechanics (if known) to be employed in the additional classification or their representatives, and the contracting officer agree on the classification and wage rate (including the amount designated for fringe benefits where appropriate), a report of the action taken shall be sent by the contracting officer to the DOL, Administrator of the Wage and Hour Division, Employment Standards Administration, Washington, D.C. 20210. The Wage and Hour Administrator, or an authorized representative, will approve, modify, or disapprove every additional classification action within 30 days of receipt and so advise the contracting officer or will notify the contracting officer within the 30-day period that additional time is necessary.

d. In the event the contractor or subcontractors, as appropriate, the laborers or mechanics to be employed in the additional classification or their representatives, and the contracting officer do not agree on the proposed classification and wage rate (including the amount designated for fringe benefits, where appropriate), the contracting officer shall refer the questions, including the views of all interested parties and the recommendation of the contracting officer, to the Wage and Hour Administrator for determination. Said Administrator, or an authorized representative, will issue a determination within 30 days of receipt and so advise the contracting officer or will notify the contracting officer within the 30-day period that additional time is necessary.

e. The wage rate (including fringe benefits where appropriate) determined pursuant to paragraph 2c or 2d of this Section IV shall be paid to all workers performing work in the additional classification from the first day on which work is performed in the classification.

3. **Payment of Fringe Benefits:**

a. Whenever the minimum wage rate prescribed in the contract for a class of laborers or mechanics includes a fringe benefit which is not expressed as an hourly rate, the contractor or subcontractors, as appropriate, shall either pay the benefit as stated in the wage determination or shall pay another bona fide fringe benefit or an hourly case equivalent thereof.

b. If the contractor or subcontractor, as appropriate, does not make payments to a trustee or other third person, he/she may consider as a part of the wages of any laborer or mechanic the amount of any costs reasonably anticipated in providing bona fide fringe benefits under a plan or program, provided, that the Secretary of Labor has found, upon the written request of the contractor, that the applicable standards of the Davis-Bacon Act have been met. The Secretary of Labor may require the contractor to set aside in a separate account assets for the meeting of obligations under the plan or program.

4. **Apprentices and Trainees (Programs of the U.S. DOL) and Helpers:**

a. Apprentices:

(1) Apprentices will be permitted to work at less than the predetermined rate for the work they performed when they are employed pursuant to and individually registered in a bona fide apprenticeship program registered with the DOL, Employment and Training Administration, Bureau of Apprenticeship and Training, or with a State apprenticeship agency recognized by the

Bureau, or if a person is employed in his/her first 90 days of probationary employment as an apprentice in such an apprenticeship program, who is not individually registered in the program, but who has been certified by the Bureau of Apprenticeship and Training or a State apprenticeship agency (where appropriate) to be eligible for probationary employment as an apprentice.

(2) The allowable ratio of apprentices to journeyman-level employees on the job site in any craft classification shall not be greater than the ratio permitted to the contractor as to the entire work force under the registered program. Any employee listed on a payroll at an apprentice wage rate, who is not registered or otherwise employed as stated above, shall be paid not less than the applicable wage rate listed in the wage determination for the classification of work actually performed. In addition, any apprentice performing work on the job site in excess of the ratio permitted under the registered program shall be paid not less than the applicable wage rate on the wage determination for the work actually performed. Where a contractor or subcontractor is performing construction on a project in a locality other than that in which its program is registered, the ratios and wage rates (expressed in percentages of the journeyman-level hourly rate) specified in the contractor's or subcontractor's registered program shall be observed.

(3) Every apprentice must be paid at not less than the rate specified in the registered program for the apprentice's level of progress, expressed as a percentage of the journeyman-level hourly rate specified in the applicable wage determination. Apprentices shall be paid fringe benefits in accordance with the provisions of the apprenticeship program. If the apprenticeship program does not specify fringe benefits, apprentices must be paid the full amount of fringe benefits listed on the wage determination for the applicable classification. If the Administrator for the Wage and Hour Division determines that a different practice prevails for the applicable apprentice classification, fringes shall be paid in accordance with that determination.

(4) In the event the Bureau of Apprenticeship and Training, or a State apprenticeship agency recognized by the Bureau, withdraws approval of an apprenticeship program, the contractor or subcontractor will no longer be permitted to utilize apprentices at less than the applicable predetermined rate for the comparable work performed by regular employees until an acceptable program is approved.

b. Trainees:

(1) Except as provided in 29 CFR 5.16, trainees will not be permitted to work at less than the predetermined rate for the work performed unless they are employed pursuant to and individually registered in a program which has received prior approval, evidenced by formal certification by the DOL, Employment and Training Administration.

(2) The ratio of trainees to journeyman-level employees on the job site shall not be greater than permitted under the plan approved by the Employment and Training Administration. Any employee listed on the payroll at a trainee rate who is not registered and participating in a training plan approved by the Employment and Training Administration shall be paid not less than the applicable wage rate on the wage determination for the classification of work actually performed. In addition, any trainee performing work on the job site in excess of the ratio permitted under the registered program shall be paid not less than the applicable wage rate on the wage determination for the work actually performed.

(3) Every trainee must be paid at not less than the rate specified in the approved program for his/her level of progress, expressed as a percentage of the journeyman-level hourly rate specified in the applicable wage determination. Trainees shall be paid fringe benefits in accordance with the provisions of the trainee program. If the trainee program does not mention fringe benefits, trainees shall be paid the full amount of fringe benefits listed on the wage determination unless the Administrator of the Wage and Hour Division determines that there is an apprenticeship program associated with the corresponding journeyman-level wage rate on the wage determination which provides for less than full fringe benefits for apprentices, in which case such trainees shall receive the same fringe benefits as apprentices.

(4) In the event the Employment and Training Administration withdraws approval of a training program, the contractor or subcontractor will no longer be permitted to utilize trainees at less than the applicable predetermined rate for the work performed until an acceptable program is approved.

c. Helpers:

Helpers will be permitted to work on a project if the helper classification is specified and defined on the applicable wage determination or is approved pursuant to the conformance procedure set forth in Section IV.2. Any worker listed on a payroll at a helper wage rate, who is not a helper under a approved definition, shall be paid not less than the applicable wage rate on the wage determination for the classification of work actually performed.

5. **Apprentices and Trainees (Programs of the U.S. DOT):**

Apprentices and trainees working under apprenticeship and skill training programs which have been certified by the Secretary of Transportation as promoting EEO in connection with Federal-aid highway construction programs are not subject to the requirements of paragraph 4 of this Section IV. The straight time hourly wage rates for apprentices and trainees under such programs will be established by

the particular programs. The ratio of apprentices and trainees to journeymen shall not be greater than permitted by the terms of the particular program.

6. **Withholding:**

The SHA shall upon its own action or upon written request of an authorized representative of the DOL withhold, or cause to be withheld, from the contractor or subcontractor under this contract or any other Federal contract with the same prime contractor, or any other Federally-assisted contract subject to Davis-Bacon prevailing wage requirements which is held by the same prime contractor, as much of the accrued payments or advances as may be considered necessary to pay laborers and mechanics, including apprentices, trainees, and helpers, employed by the contractor or any subcontractor the full amount of wages required by the contract. In the event of failure to pay any laborer or mechanic, including any apprentice, trainee, or helper, employed or working on the site of the work, all or part of the wages required by the contract, the SHA contracting officer may, after written notice to the contractor, take such action as may be necessary to cause the suspension of any further payment, advance, or guarantee of funds until such violations have ceased.

7. **Overtime Requirements:**

No contractor or subcontractor contracting for any part of the contract work which may require or involve the employment of laborers, mechanics, watchmen, or guards (including apprentices, trainees, and helpers described in paragraphs 4 and 5 above) shall require or permit any laborer, mechanic, watchman, or guard in any workweek in which he/she is employed on such work, to work in excess of 40 hours in such workweek unless such laborer, mechanic, watchman, or guard receives compensation at a rate not less than one-and-one-half times his/her basic rate of pay for all hours worked in excess of 40 hours in such workweek.

8. **Violation:**

Liability for Unpaid Wages; Liquidated Damages: In the event of any violation of the clause set forth in paragraph 7 above, the contractor and any subcontractor responsible thereof shall be liable to the affected employee for his/her unpaid wages. In addition, such contractor and subcontractor shall be liable to the United States (in the case of work done under contract for the District of Columbia or a territory, to such District or to such territory) for liquidated damages. Such liquidated damages shall be computed with respect to each individual laborer, mechanic, watchman, or guard employed in violation of the clause set forth in paragraph 7, in the sum of $10 for each calendar day on which such employee was required or permitted to work in excess of the standard work week of 40 hours without payment of the overtime wages required by the clause set forth in paragraph 7.

9. **Withholding for Unpaid Wages and Liquidated Damages:**

The SHA shall upon its own action or upon written request of any authorized representative of the DOL withhold, or cause to be withheld, from any monies payable on account of work performed by the contractor or subcontractor under any such contract or any other Federal contract with the same prime contractor, or any other Federally-assisted contract subject to the Contract Work Hours and Safety Standards Act, which is held by the same prime contractor, such sums as may be determined to be necessary to satisfy any liabilities of such contractor or subcontractor for unpaid wages and liquidated damages as provided in the clause set forth in paragraph 8 above.

V. STATEMENTS AND PAYROLLS

(Applicable to all Federal-aid construction contracts exceeding $2,000 and to all related subcontracts, except for projects located on roadways classified as local roads or rural collectors, which are exempt.)

1. **Compliance with Copeland Regulations (29 CFR 3):**

The contractor shall comply with the Copeland Regulations of the Secretary of Labor which are herein incorporated by reference.

2. **Payrolls and Payroll Records:**

a. Payrolls and basic records relating thereto shall be maintained by the contractor and each subcontractor during the course of the work and preserved for a period of 3 years from the date of completion of the contract for all laborers, mechanics, apprentices, trainees, watchmen, helpers, and guards working at the site of the work.

b. The payroll records shall contain the name, social security number, and address of each such employee; his or her correct classification; hourly rates of wages paid (including rates of contributions or costs anticipated for bona fide fringe benefits or cash equivalent thereof the types described in Section 1(b)(2)(B) of the Davis Bacon Act); daily and weekly number of hours worked; deductions made; and actual wages paid. In addition, for Appalachian contracts, the payroll records shall contain a notation indicating whether the employee does, or does not, normally reside in the labor area as defined in Attachment A, paragraph 1. Whenever the Secretary of Labor, pursuant to Section IV, paragraph 3b, has found that the wages of any laborer or mechanic include the amount of any costs reasonably anticipated in providing benefits under a plan or program described in Section 1(b)(2)(B) of the Davis Bacon Act, the contractor and each subcontractor shall maintain records which show that the commitment to provide such benefits is enforceable, that the plan or program is financially responsible, that the plan or program has been communicated in writing to the laborers or mechanics affected, and show the cost anticipated or the actual cost incurred in providing benefits.

Contractors or subcontractors employing apprentices or trainees under approved programs shall maintain written evidence of the registration of apprentices and trainees, and ratios and wage rates prescribed in the applicable programs.

c. Each contractor and subcontractor shall furnish, each week in which any contract work is performed, to the SHA resident engineer a payroll of wages paid each of its employees (including apprentices, trainees, and helpers, described in Section IV, paragraphs 4 and 5, and watchmen and guards engaged on work during the preceding weekly payroll period). The payroll submitted shall set out accurately and completely all of the information required to be maintained under paragraph 2b of this Section V. This information may be submitted in any form desired. Optional Form WH-347 is available for this purpose and may be purchased from the Superintendent of Documents (Federal stock number 029-005-0014-1), U.S. Government Printing Office, Washington, D.C. 20402. The prime contractor is responsible for the submission of copies of payrolls by all subcontractors.

d. Each payroll submitted shall be accompanied by a "Statement of Compliance," signed by the contractor or subcontractor or his/her agent who pays or supervises the payment of the persons employed under the contract and shall certify the following:

(1) that the payroll for the payroll period contains the information required to be maintained under paragraph 2b of this Section V and that such information is correct and complete;

(2) that such laborer or mechanic (including each helper, apprentice, and trainee) employed on the contract during the payroll period has been paid the full weekly wages earned, without rebate, either directly or indirectly, and that no deductions have been made either directly or indirectly from the full wages earned, other than permissible deductions as set forth in the Regulations, 29 CFR 3;

(3) that each laborer or mechanic has been paid not less that the applicable wage rate and fringe benefits or cash equivalent for the classification of worked performed, as specified in the applicable wage determination incorporated into the contract.

e. The weekly submission of a properly executed certification set forth on the reverse side of Optional Form WH-347 shall satisfy the requirement for submission of the "Statement of Compliance" required by paragraph 2d of this Section V.

f. The falsification of any of the above certifications may subject the contractor to civil or criminal prosecution under 18 U.S.C. 1001 and 31 U.S.C. 231.

g. The contractor or subcontractor shall make the records required under paragraph 2b of this Section V available for inspection, copying, or transcription by authorized representatives of the SHA, the FHWA, or the DOL, and shall permit such representatives to interview employees during working hours on the job. If the contractor or subcontractor fails to submit the required records or to make them available, the SHA, the FHWA, the DOL, or all may, after written notice to the contractor, sponsor, applicant, or owner, take such actions as may be necessary to cause the suspension of any further payment, advance, or guarantee of funds. Furthermore, failure to submit the required records upon request or to make such records available may be grounds for debarment action pursuant to 29 CFR 5.12.

VI. RECORD OF MATERIALS, SUPPLIES, AND LABOR

1. On all Federal-aid contracts on the National Highway System, except those which provide solely for the installation of protective devices at railroad grade crossings, those which are constructed on a force account or direct labor basis, highway beautification contracts, and contracts for which the total final construction cost for roadway and bridge is less than $1,000,000 (23 CFR 635) the contractor shall:

a. Become familiar with the list of specific materials and supplies contained in Form FHWA-47, "Statement of Materials and Labor Used by Contractor of Highway Construction Involving Federal Funds," prior to the commencement of work under this contract.

b. Maintain a record of the total cost of all materials and supplies purchased for and incorporated in the work, and also of the quantities of those specific materials and supplies listed on Form FHWA-47, and in the units shown on Form FHWA-47.

c. Furnish, upon the completion of the contract, to the SHA resident engineer on Form FHWA-47 together with the data required in paragraph 1b relative to materials and supplies, a final labor summary of all contract work indicating the total hours worked and the total amount earned.

2. At the prime contractor's option, either a single report covering all contract work or separate reports for the contractor and for each subcontract shall be submitted.

VII. SUBLETTING OR ASSIGNING THE CONTRACT

1. The contractor shall perform with its own organization contract work amounting to not less than 30 percent (or a greater percentage if specified elsewhere in the contract) of the total original contract price, excluding any specialty items designated by the State. Specialty items may be performed by subcontract and the amount of any such specialty items performed may be deducted from the total original contract price before computing the amount of work required to be performed by the contractor's own organization (23 CFR 635).

a. "Its own organization" shall be construed to include only workers employed and paid directly by the prime contractor and equipment owned or rented by the prime contractor, with or without operators. Such term does not include employees or equipment of a subcontractor, assignee, or agent of the prime contractor.

b. "Specialty Items" shall be construed to be limited to work that requires highly specialized knowledge, abilities, or equipment not ordinarily available in the type of contracting organizations qualified and expected to bid on the contract as a whole and in general are to be limited to minor components of the overall contract.

2. The contract amount upon which the requirements set forth in paragraph 1 of Section VII is computed includes the cost of material and manufactured products which are to be purchased or produced by the contractor under the contract provisions.

3. The contractor shall furnish (a) a competent superintendent or supervisor who is employed by the firm, has full authority to direct performance of the work in accordance with the contract requirements, and is in charge of all construction operations (regardless of who performs the work) and (b) such other of its own organizational resources (supervision, management, and engineering services) as the SHA contracting officer determines is necessary to assure the performance of the contract.

4. No portion of the contract shall be sublet, assigned or otherwise disposed of except with the written consent of the SHA contracting officer, or authorized representative, and such consent when given shall not be construed to relieve the contractor of any responsibility for the fulfillment of the contract. Written consent will be given only after the SHA has assured that each subcontract is evidenced in writing and that it contains all pertinent provisions and requirements of the prime contract.

VIII. SAFETY: ACCIDENT PREVENTION

1. In the performance of this contract the contractor shall comply with all applicable Federal, State, and local laws governing safety, health, and sanitation (23 CFR 635). The contractor shall provide all safeguards, safety devices and protective equipment and take any other needed actions as it determines, or as the SHA contracting officer may determine, to be reasonably necessary to protect the life and health of employees on the job and the safety of the public and to protect property in connection with the performance of the work covered by the contract.

2. It is a condition of this contract, and shall be made a condition of each subcontract, which the contractor enters into pursuant to this contract, that the contractor and any subcontractor shall not permit any employee, in performance of the contract, to work in surroundings or under conditions which are unsanitary, hazardous or dangerous to his/her health or safety, as determined under construction safety and health standards (29 CFR 1926) promulgated by the Secretary of Labor, in accordance with Section 107 of the Contract Work Hours and Safety Standards Act (40 U.S.C. 333).

3. Pursuant to 29 CFR 1926.3, it is a condition of this contract that the Secretary of Labor or authorized representative thereof, shall have right of entry to any site of contract performance to inspect or investigate the matter of compliance with the construction safety and health standards and to carry out the duties of the Secretary under Section 107 of the Contract Work Hours and Safety Standards Act (40 U.S.C. 333).

IX. FALSE STATEMENTS CONCERNING HIGHWAY PROJECTS

In order to assure high quality and durable construction in conformity with approved plans and specifications and a high degree of reliability on statements and representations made by engineers, contractors, suppliers, and workers on Federal-aid highway projects, it is essential that all persons concerned with the project perform their functions as carefully, thoroughly, and honestly as possible. Willful falsification, distortion, or misrepresentation with respect to any facts related to the project is a violation of Federal law. To prevent any misunderstanding regarding the seriousness of these and similar acts, the following notice shall be posted on each Federal-aid highway project (23 CFR 635) in one or more places where it is readily available to all persons concerned with the project:

NOTICE TO ALL PERSONNEL ENGAGED ON FEDERAL-AID HIGHWAY PROJECTS

18 U.S.C. 1020 reads as follows:

"Whoever, being an officer, agent, or employee of the United States, or of any State or Territory, or whoever, whether a person, association, firm, or corporation, knowingly makes any false statement, false representation, or false report as to the character, quality, quantity, or cost of the material used or to be used, or the quantity or quality of the work performed or to be performed, or the cost thereof in connection with the submission of plans, maps, specifications, contracts, or costs of construction on any highway or related project submitted for approval to the Secretary of Transportation; or

Whoever knowingly makes any false statement, false representation, false report or false claim with respect to the character, quality, quantity, or cost of any work performed or to be performed, or materials furnished or to be

furnished, in connection with the construction of any highway or related project approved by the Secretary of Transportation; or
Whoever knowingly makes any false statement or false representation as to material fact in any statement, certificate, or report submitted pursuant to provisions of the Federal-aid Roads Act approved July 1, 1916, (39 Stat. 355), as amended and supplemented;

Shall be fined not more that $10,000 or imprisoned not more than 5 years or both."

X. IMPLEMENTATION OF CLEAN AIR ACT AND FEDERAL WATER POLLUTION CONTROL ACT

(Applicable to all Federal-aid construction contracts and to all related subcontracts of $100,000 or more.)

By submission of this bid or the execution of this contract, or subcontract, as appropriate, the bidder, Federal-aid construction contractor, or subcontractor, as appropriate, will be deemed to have stipulated as follows:

1. That any facility that is or will be utilized in the performance of this contract, unless such contract is exempt under the Clean Air Act, as amended (42 U.S.C. 1857 et seq., as amended by Pub.L. 91-604), and under the Federal Water Pollution Control Act, as amended (33 U.S.C. 1251 et seq., as amended by Pub.L. 92-500), Executive Order 11738, and regulations in implementation thereof (40 CFR 15) is not listed, on the date of contract award, on the U.S. Environmental Protection Agency (EPA) List of Violating Facilities pursuant to 40 CFR 15.20.

2. That the firm agrees to comply and remain in compliance with all the requirements of Section 114 of the Clean Air Act and Section 308 of the Federal Water Pollution Control Act and all regulations and guidelines listed thereunder.

3. That the firm shall promptly notify the SHA of the receipt of any communication from the Director, Office of Federal Activities, EPA, indicating that a facility that is or will be utilized for the contract is under consideration to be listed on the EPA List of Violating Facilities.

4. That the firm agrees to include or cause to be included the requirements of paragraph 1 through 4 of this Section X in every nonexempt subcontract, and further agrees to take such action as the government may direct as a means of enforcing such requirements.

XI. CERTIFICATION REGARDING DEBARMENT, SUSPENSION, ELIGIBILITY AND VOLUNTARY EXCLUSION

1. **Instructions for Certification - Primary Covered Transactions:**
(Applicable to all Federal-aid contracts - 49 CFR 29)

a. By signing and submitting this proposal, the prospective primary participant is providing the certification set out below.

b. The inability of a person to provide the certification set out below will not necessarily result in denial of participation in this covered transaction. The prospective participant shall submit an explanation of why it cannot provide the certification set out below. The certification or explanation will be considered in connection with the department or agency's determination whether to enter into this transaction. However, failure of the prospective primary participant to furnish a certification or an explanation shall disqualify such a person from participation in this transaction.

c. The certification in this clause is a material representation of fact upon which reliance was placed when the department or agency determined to enter into this transaction. If it is later determined that the prospective primary participant knowingly rendered an erroneous certification, in addition to other remedies available to the Federal Government, the department or agency may terminate this transaction for cause of default.

d. The prospective primary participant shall provide immediate written notice to the department or agency to whom this proposal is submitted if any time the prospective primary participant learns that its certification was erroneous when submitted or has become erroneous by reason of changed circumstances.

e. The terms "covered transaction," "debarred," "suspended," "ineligible," "lower tier covered transaction," "participant," "person," "primary covered transaction," "principal," "proposal," and "voluntarily excluded," as used in this clause, have the meanings set out in the Definitions and Coverage sections of rules implementing Executive Order 12549. You may contact the department or agency to which this proposal is submitted for assistance in obtaining a copy of those regulations.

f. The prospective primary participant agrees by submitting this proposal that, should the proposed covered transaction be entered into, it shall not knowingly enter into any lower tier covered transaction with a person who is debarred, suspended, declared ineligible, or voluntarily excluded from participation in this covered transaction, unless authorized by the department or agency entering into this transaction.

g. The prospective primary participant further agrees by submitting this proposal that it will include the clause titled "Certification Regarding Debarment, Suspension, Ineligibility and Voluntary Exclusion-Lower Tier Covered Transaction," provided by the department or agency entering into this covered transaction, without modification, in all lower tier covered transactions and in all solicitations for lower tier covered transactions.

h. A participant in a covered transaction may rely upon a certification of a prospective participant in a lower tier covered transaction that is not debarred, suspended, ineligible, or voluntarily excluded from the covered transaction, unless it knows that the certification is erroneous. A participant may decide the method and frequency by which it determines the eligibility of its principals. Each participant may, but is not required to, check the nonprocurement portion of the "Lists of Parties Excluded From Federal Procurement or Nonprocurement Programs" (Nonprocurement List) which is compiled by the General Services Administration.

i. Nothing contained in the foregoing shall be construed to require establishment of a system of records in order to render in good faith the certification required by this clause. The knowledge and information of participant is not required to exceed that which is normally possessed by a prudent person in the ordinary course of business dealings.

j. Except for transactions authorized under paragraph f of these instructions, if a participant in a covered transaction knowingly enters into a lower tier covered transaction with a person who is suspended, debarred, ineligible, or voluntarily excluded from participation in this transaction, in addition to other remedies available to the Federal Government, the department or agency may terminate this transaction for cause or default.

* * * * *

Certification Regarding Debarment, Suspension, Ineligibility and Voluntary Exclusion--
Primary Covered Transactions

1. The prospective primary participant certifies to the best of its knowledge and belief, that it and its principals:

   a. Are not presently debarred, suspended, proposed for debarment, declared ineligible, or voluntarily excluded from covered transactions by any Federal department or agency;

   b. Have not within a 3-year period preceding this proposal been convicted of or had a civil judgement rendered against them for commission of fraud or a criminal offense in connection with obtaining, attempting to obtain, or performing a public (Federal, State or local) transaction or contract under a public transaction; violation of Federal or State antitrust statutes or commission of embezzlement, theft, forgery, bribery, falsification or destruction of records, making false statements, or receiving stolen property;

   c. Are not presently indicted for or otherwise criminally or civilly charged by a governmental entity (Federal, State or local) with commission of any of the offenses enumerated in paragraph 1b of this certification; and

   d. Have not within a 3-year period preceding this application/proposal had one or more public transactions (Federal, State or local) terminated for cause or default.

2. Where the prospective primary participant is unable to certify to any of the statements in this certification, such prospective participant shall attach an explanation to this proposal.

* * * * *

2. **Instructions for Certification - Lower Tier Covered Transactions:**
(Applicable to all subcontracts, purchase orders and other lower tier transactions of $25,000 or more - 49 CFR 29)

a. By signing and submitting this proposal, the prospective lower tier is providing the certification set out below.

b. The certification in this clause is a material representation of fact upon which reliance was placed when this transaction was entered into. If it is later determined that the prospective lower tier participant knowingly rendered an erroneous certification, in addition to other remedies available to the Federal Government, the department, or agency with which this transaction originated may pursue available remedies, including suspension and/or debarment.

c. The prospective lower tier participant shall provide immediate written notice to the person to which this proposal is submitted if at any time the prospective lower tier participant learns that its certification was erroneous by reason of changed circumstances.

d. The terms "covered transaction," "debarred," "suspended," "ineligible," "primary covered transaction," "participant," "person," "principal," "proposal," and "voluntarily excluded," as used in this clause, have the meanings set out in the Definitions and Coverage sections of rules implementing Executive Order 12549. You may contact the person to which this proposal is submitted for assistance in obtaining a copy of those regulations.

e. The prospective lower tier participant agrees by submitting this proposal that, should the proposed covered transaction be entered into, it shall not knowingly enter into any lower tier covered transaction with a person who is debarred, suspended, declared

ineligible, or voluntarily excluded from participation in this covered transaction, unless authorized by the department or agency with which this transaction originated.

f. The prospective lower tier participant further agrees by submitting this proposal that it will include this clause titled "Certification Regarding Debarment, Suspension, Ineligibility and Voluntary Exclusion-Lower Tier Covered Transaction," without modification, in all lower tier covered transactions and in all solicitations for lower tier covered transactions.

g. A participant in a covered transaction may rely upon a certification of a prospective participant in a lower tier covered transaction that is not debarred, suspended, ineligible, or voluntarily excluded from the covered transaction, unless it knows that the certification is erroneous. A participant may decide the method and frequency by which it determines the eligibility of its principals. Each participant may, but is not required to, check the Nonprocurement List.

h. Nothing contained in the foregoing shall be construed to require establishment of a system of records in order to render in good faith the certification required by this clause. The knowledge and information of participant is not required to exceed that which is normally possessed by a prudent person in the ordinary course of business dealings.

i. Except for transactions authorized under paragraph e of these instructions, if a participant in a covered transaction knowingly enters into a lower tier covered transaction with a person who is suspended, debarred, ineligible, or voluntarily excluded from participation in this transaction, in addition to other remedies available to the Federal Government, the department or agency with which this transaction originated may pursue available remedies, including suspension and/or debarment.

* * * * *

Certification Regarding Debarment, Suspension, Ineligibility and Voluntary Exclusion—
Lower Tier Covered Transactions:

1. The prospective lower tier participant certifies, by submission of this proposal, that neither it nor its principals is presently debarred, suspended, proposed for debarment, declared ineligible, or voluntarily excluded from participation in this transaction by any Federal department or agency.

2. Where the prospective lower tier participant is unable to certify to any of the statements in this certification, such prospective participant shall attach an explanation to this proposal.

* * * * *

XII. CERTIFICATION REGARDING USE OF CONTRACT FUNDS FOR LOBBYING

(Applicable to all Federal-aid construction contracts and to all related subcontracts which exceed $100,000 - 49 CFR 20)

1. The prospective participant certifies, by signing and submitting this bid or proposal, to the best of his or her knowledge and belief, that:

a. No Federal appropriated funds have been paid or will be paid, by or on behalf of the undersigned, to any person for influencing or attempting to influence an officer or employee of any Federal agency, a Member of Congress, an officer or employee of Congress, or an employee of a Member of Congress in connection with the awarding of any Federal contract, the making of any Federal grant, the making of any Federal loan, the entering into of any cooperative agreement, and the extension, continuation, renewal, amendment, or modification of any Federal contract, grant, loan, or cooperative agreement.

b. If any funds other than Federal appropriated funds have been paid or will be paid to any person for influencing or attempting to influence an officer or employee of any Federal agency, a Member of Congress, an officer or employee of Congress, or an employee of a Member of Congress in connection with this Federal contract, grant, loan, or cooperative agreement, the undersigned shall complete and submit Standard Form-LLL, "Disclosure Form to Report Lobbying," in accordance with its instructions.

2. This certification is a material representation of fact upon which reliance was placed when this transaction was made or entered into. Submission of this certification is a prerequisite for making or entering into this transaction imposed by 31 U.S.C. 1352. Any person who fails to file the required certification shall be subject to a civil penalty of not less than $10,000 and not more than $100,000 for each such failure.

3. The prospective participant also agrees by submitting his or her bid or proposal that he or she shall require that the language of this certification be included in all lower tier subcontracts, which exceed $100,000 and that all such recipients shall certify and disclose accordingly.

S T A T E **O F** **T E N N E S S E E**

March 1, 2006

CERTIFICATION REGARDING

DEBARMENT, SUSPENSION, AND OTHER RESPONSIBILITY MATTERS

PRIMARY AND LOWER TIER COVERED TRANSACTIONS

The prospective Primary and/or Lower Tier participant certifies, by signing and submitting this proposal, to the best of its knowledge and belief, that it and its principals:

Are not presently debarred, suspended, proposed for debarment, declared ineligible, or voluntarily excluded from covered transactions by any Federal, State or local department or agency.

Have not within a three-year period preceding this proposal been convicted of or had a civil judgment rendered against them for commission of fraud or a criminal offense in connection with obtaining, attempting to obtain, or performing a public (Federal, State or local) transaction or contract under a public transaction; violation of Federal or State antitrust statutes or commission of embezzlement, theft, forgery, bribery, falsification or destruction of records, making false statements, or receiving stolen property.

Are not presently indicted for or otherwise criminally or civilly charged by a governmental entity (Federal, State or local) with commission of any of the offenses enumerated in the preceding paragraph of this certification; and

Have not within a three- year period preceding this application/proposal had one or more public transactions (Federal, State, or local) terminated for cause or default.

Where the prospective Primary and/or Lower Tier participant is unable to certify to any of the statements in this certification, such prospective participant shall attach an explanation to this proposal.

(Exceptions to the above are to be submitted on a separate sheet with the bid proposal)

For any exception noted, indicate to whom it applies, initiating agency, and dates of action. Providing false information may result in criminal prosecution or administrative sanctions.

S T A T E **O F** **T E N N E S S E E**

March 1, 2006

SPECIAL PROVISION

REGARDING

NON-DISCRIMINATION IN EMPLOYMENT

Bidders are cautioned as follows:

By signing this bid, the bidder will be deemed to have signed and agreed that all persons, firms or corporations supplying goods, material, equipment or service of any kind to the State of Tennessee will not discriminate against any employee or applicant for employment on the basis of handicap, race, religion, national origin or sex and further, that while under contract with the State will show proof upon request that all employment practices including, but not limited to, promotion, rates of pay, transfers, recruitment, recruitment advertising, terminations, layoffs and training and apprenticeship programs are not discriminatory in nature. Each contractor shall be required to post in conspicuous places, available to all employees and applicants for employment, notices of non-discrimination.

S T A T E **O F** **T E N N E S S E E**

March 1, 2006

(Rev. 12-21-10)
(Rev. 09-12-11)
(Rev. 12-15-11)
(Rev. 01-11-12)

SPECIAL PROVISION

REGARDING

TENNESSEE DEPARTMENT OF TRANSPORTATION

2012 MINIMUM WAGE SCALES FOR FEDERAL-AID CONSTRUCTION

& 2012 MINIMUM WAGE SCALES FOR STATE FUNDED CONSTRUCTION

This Contract contains "Tennessee Department of Transportation 2012 Minimum Wage Scales for State Funded Construction", Tennessee Department of Labor Decision No. T-33823, dated December 15, 2011, and Tennessee Department of Transportation 2012 Minimum Wage Scales for Federal-Aid Highway Construction, U. S. Department of Labor Decision No. TN120002 (dated January 6, 2012).

The Contractor is required to pay the greater of the two (2) rates for each classification.

Note: Minimum Wage Scales for Federal-Aid Heavy Construction are on file with the Department, and will be included in all applicable Contract Proposals.

§18.42 Retention and access requirements for records.

a. *Applicability.*
   1. This section applies to all financial and programmatic records, supporting documents, statistical records, and other records of grantees or subgrantees which are:
      i. Required to be maintained by the terms of this part, program regulations or the grant agreement, or
      ii. Otherwise reasonably considered as pertinent to program regulations or the grant agreement.
   2. This section does not apply to records maintained by contractors or subcontractors. For a requirement to place a provision concerning records in certain kinds of contracts, see §18.36(i)(10).

b. *Length of retention period.*
   1. Except as otherwise provided, records must be retained for three years from the starting date specified in paragraph (c) of this section.
   2. If any litigation, claim, negotiation, audit or other action involving the records has been started before the expiration of the 3-year period, the records must be retained until completion of the action and resolution of all issues which arise from it, or until the end of the regular 3-year period, whichever is later.
   3. To avoid duplicate recordkeeping, awarding agencies may make special arrangements with grantees and subgrantees to retain any records which are continuously needed for joint use. The awarding agency will request transfer of records to its custody when it determines that the records possess long-term retention value. When the records are transferred to or maintained by the Federal agency, the 3-year retention requirement is not applicable to the grantee or subgrantee.

c. *Starling date of retention period--*
   1. *General.* When grant support is continued or renewed at annual or other intervals, the retention period for the records of each funding period starts on the day the grantee or subgrantee submits to the awarding agency its single or last expenditure report for that period. However, if grant support is continued or renewed quarterly, the retention period for each year's records starts on the day the grantee submits its expenditure report for the last quarter of the Federal fiscal year. In all other cases, the retention period starts on the day the grantee submits its final expenditure report. If an expenditure report has been waived, the retention period starts on the day the report would have been due.
   2. *Real properly and equipment records.* The retention period for real property and equipment records starts from the date of the disposition or replacement or transfer at the direction of the awarding agency.
   3. *Records for income transactions after grant or subgrant supporl.* In some cases grantees must report income after the period of grant support. Where there is such a requirement, the retention period for the records pertaining to the earning of the income starts from the end of the grantee's fiscal year in which the income is earned.
   4. *Indirect cost rate proposals, cost allocations plans, etc.* This paragraph applies to the following types of documents, and their supporting records: indirect cost rate computations or proposals, cost allocation plans, and any similar accounting computations of the rate at which a particular group of costs is chargeable (such as computer usage chargeback rates or composite fringe benefit rates).
      i. *If submitted for negotiation.* If the proposal, plan, or other computation is required to be submitted to the Federal Government (or to the grantee) to form the basis for negotiation of the rate, then the 3-year retention period for its supporting records starts from the date of such submission.
      ii. *If not submitted for negotiation.* If the proposal, plan, or other computation is not required to be submitted to the Federal Government (or to the grantee) for negotiation purposes, then the 3-year retention period for the proposal plan, or computation and$s$ supporting records starts from theend of the fiscal year (or other accounting period) covered by the proposal, plan, or other computation.

d. *Substitution of microfilm.* Copies made by microfilming, photocopying, or similar methods may be substituted for the original records.

e. *Access to records --*
   1. *Records of grantees and subgrantees.* The awarding agency and the Comptroller General of the United States, or any of their authorized representatives, shall have the right of access to any pertinent books, documents, papers, or other records of grantees

and subgrantees which are pertinent to the grant, in order to make audits, examinations, excerpts, and transcripts.

2. *Expiration of right of access.* The right of access in this section must not be limited to the required retention period but shall last as long as the records are retained.

f. *Restrictions on public access.* The Federal Freedom of Information Act (5 U.S.C. 552) does not apply to records unless required by Federal, State, or local law, grantees and subgrantees are not required to permit public access to their records.

§18.36 Procurement.

i. *Contract provisions.* A grantee's and subgrantee's contracts must contain provisions in paragraph (i) of this section. Federal agencies are permitted to require changes, remedies, changed conditions, access and records retention, suspension of work, and other clauses approved by the Office of Federal Procurement Policy.

1. Administrative, contractual, or legal remedies in instances where contractors violate or breach contract terms, and provide for such sanctions and penalties as may be appropriate. (Contracts more than the simplified acquisition threshold)
2. Termination for cause and for convenience by the grantee or subgrantee including the manner by which it will be effected and the basis for settlement. (All contracts in excess of $10,000)
3. Compliance with Executive Order 11246 of September 24, 1965, entitled "Equal Employment Opportunity," as amended by Executive Order 11375 of October 13, 1967, and as supplemented in Department of Labor regulations (41 CFR chapter 60). (All construction contracts awarded in excess of $10,000 by grantees and their contractors or subgrantees)
4. Compliance with the Copeland "Anti-Kickback" Act (18 U.S.C. 874) as supplemented in Department of Labor regulations (29 CFR part 3). (All contracts and subgrants for construction or repair)
5. Compliance with the Davis-Bacon Act (40 U.S.C. 276a to 276a-7) as supplemented by Department of Labor regulations (29 CFR part 5). (Construction contracts in excess of $2000 awarded by grantees and subgrantees when required by Federal grant program legislation)
6. Compliance with Sections 103 and 107 of the Contract Work Hours and Safety Standards Act (40 U.S.C. 327-330) as supplemented by Department of Labor regulations (29 CFR part 5). (Construction contracts awarded by grantees and subgrantees in excess of $2000, and in excess of $2500 for other contracts which involve the employment of mechanics or laborers)
7. Notice of awarding agency requirements and regulations pertaining to reporting.
8. Notice of awarding agency requirements and regulations pertaining to patent rights with respect to any discovery or invention which arises or is developed in the course of or under such contract.
9. Awarding agency requirements and regulations pertaining to copyrights and rights in data.
10. Access by the grantee, the subgrantee, the Federal grantor agency, the Comptroller General of the United States, or any of their duly authorized representatives to any books, documents, papers, and records of the contractor which are directly pertinent to that specific contract for the purpose of making audit, examination, excerpts, and transcriptions.
11. Retention of all required records for three years after grantees or subgrantees make final payments and all other pending matters are closed.
12. Compliance with all applicable standards, orders, or requirements issued under section 306 of the Clean Air Act (42 U.S.C. 1857(h)), section 508 of the Clean Water Act (33 U.S.C. 1368), Executive Order 11738, and Environmental Protection Agency regulations (40 CFR part 15). (Contracts, subcontracts, and subgrants of amounts in excess of $100,000)
13. Mandatory standards and policies relating to energy efficiency which are contained in the state energy conservation plan issued in compliance with the Energy Policy and Conservation Act (Pub. L. 94-163,89 Stat. 871).

§18.26 Non-Federal audits.

a. *Basic rule.* Grantees and subgrantees are responsible for obtaining audits in accordance with the Single Audit Act Amendments of 1996 (31 U.S.C. 7501-7507) and revised OMB Circular A-133, "Audits of States, Local Governments, and Non-Profit Organizations." The audits shall be made by an independent auditor in accordance with generally accepted government auditing standards covering financial audits.

b. *Subgrantees.* State or local governments, as those terms are defined for purposes of the Single Audit Act Amendments of 1996, that provide Federal awards to a subgrantee, which expends $300,000 or more (or other amount as specified by OMB) in Federal awards in a fiscal year, shall:

1. Determine whether State or local subgrantees have met the audit requirements of the Act and whether subgrantees covered by OMB Circular A-110, "Uniform Administrative Requirements for Grants and Agreements with Institutions of Higher Education, Hospitals, and Other Non-Profit Organizations," have met the audit requirements of the Act. Commercial contractors (private for-profit and private and governmental organizations) providing goods and services to State and local governments are not required to have a single audit performed. State and local governments should use their own procedures to ensure that the contractor has complied with laws and regulations affecting the expenditure of Federal funds;
2. Determine whether the subgrantee spent Federal assistance funds provided in accordance with applicable laws and regulations. This may be accomplished by reviewing an audit of the subgrantee made in accordance with the Act, Circular A-110, or through other means (e.g., program reviews) if the subgrantee has not had such an audit;
3. Ensure that appropriate corrective action is taken within six months after receipt of the audit report in instance of noncompliance with Federal laws and regulations;
4. Consider whether subgrantee audits necessitate adjustment of the grantee's own records; and
5. Require each subgrantee to permit independent auditors to have access to the records and financial statements.

c. *Auditor selection.* In arranging for audit services, §18.36 shall be followed.

GENERAL CONTRACT FORM

The General Contract Form is included in every solicitation requiring insurance. The general requirements of the contract form are supplemented by items checked on the Insurance Checklist that identify specific requirements for the bid or project.

INSURANCE

Review this section carefully with your insurance agent or broker prior to submitting a bid or proposal. See Insurance Checklist (part of the Bid Forms) for specific coverage applicable to this contract. The term "Contract" as used in this section shall mean the Agreement covering the work that is entered into between the City of Johnson City, Tennessee and the Contractor.

1. General Insurance Requirements:

1.1 The Contractor shall not start work under this contract until the Contractor has obtained at its own expense all of the insurance called for hereunder and such insurance has been approved by the City; nor shall the Contractor allow any subcontractor to start work on any subcontract until all insurance required of the subcontractor has been so obtained and approved by the Contractor. Approval of insurance required of the Contractor will be granted only after submission to the Director of Purchasing of original, signed Certificate(s) of Insurance, General Contract Form, and Insurance Checklist or, alternately, at the City's request, certified copies of the required insurance policies.

1.2 No acceptance and/or approval of any insurance by the City shall be construed as relieving or excusing the Contractor, or the surety, or its bond, from any liability or obligation imposed upon either or both of them by the provisions of the Contract Documents.

1.3 The City of Johnson City (including its elected and appointed officials, agents, and employees) is to be named as an additional insured under all coverage except Worker's Compensation and Automobile Liability, and the Certificate of Insurance or the certified policy, if requested, must so state. Coverage afforded under this paragraph shall be primary as respects the City, its elected and appointed officials, agents and employees. The following definition of the term "City" applies to all policies issued under the contract:

> "The City of Johnson City, Tennessee together with all of its various departments, bureaus, and agencies, as well as any affiliated or subsidiary board, committee, or authority, including but not limited to the Johnson City Public School System."

1.4 The contractor shall provide insurance as specified in the Insurance Checklist contained in this document.

1.5 The Contractor covenants to save, defend, hold harmless and indemnify the City of Johnson City, Tennessee together with its various departments, elected or appointed officials, employees, officers, counsel, agents, and any and all other persons or entities acting on behalf of the same (collectively the City) from and against any and all claims of any sort based upon any theory of liability whatsoever, for any and all harm, loss, damage, injury, cost (including court cost and attorney fees) charges, or other liability of any nature whatsoever, however caused, resulting from or arising out of or in any way connected with the contractors performance or non-performance of the terms of the contract documents or its obligations under the contract based upon any theory of liability whatsoever, including claims brought by third persons, and further covenants to discharge all of the aforesaid persons and entities and forever hold them harmless from the same. The foregoing obligation to indemnify and defend shall continue in full force and effect after the aforesaid contractor completes all of the work required under the contract, until such time as the applicable statues of limitation or repose have expired.

1.6 The Contractor shall be responsible for the work performed under the Contract Documents and every part thereof, and for all materials, tools, equipment, appliances, and property of any description used in connection with the work. The Contractor assumes all risks for direct and indirect damage or injury to the property or persons used or employed on or in connection with the work contracted for, and of all damage or injury to any person or property wherever located, resulting from any action, omission, commission or operation under the Contract, or in connection in any way whatsoever with the contracted work, until final acceptance of the work by the City.

1.7 Insurance coverage required in these specifications shall be in force throughout the Contract Term. If the Contractor fails to provide acceptable evidence of current insurance within ten days of written notice at any time during the Contract Term, the City shall have absolute right to terminate the Contract without any further obligation to the Contractor and the Contractor shall be liable to the City for the entire additional cost of procuring performance by another vendor and the cost of performing the incomplete portion of the Contract at time of termination. Contractor is required to provide the City with notice of cancellation, non-renewal, or material change in coverage at least thirty (30) days prior to cancellation, non-renewal, or material change in coverage."

1.8 Contractual and other liability insurance provided under this Contract shall not contain a supervision, inspection or engineering services exclusion that would preclude the City from supervising or inspecting the project as to the end result. The Contractor shall assume all on-the-job responsibilities as to the control of persons directly employed by it and of the subcontractors and any persons employed by the subcontractor.

1.9 Nothing contained in the specifications shall be construed as creating any contractual relationship between any subcontractor and the City. The Contractor shall be as fully responsible to the City for acts and omissions of the subcontractors and of persons employed by them as it is for acts and omissions of persons directly employed by the Contractor.

1.10 Precaution shall be exercised by the Contractor at all times for the protection of persons (including employees) and property. All existing structures, utilities, roads, services, trees and shrubbery shall be protected against damage or interruption of service at all times by the Contractor and its subcontractors during the term of the Contract, and the Contractor shall be held responsible for any damage to property occurring by reason of its operation on the property.

1.11 If a Contractor can not meet the insurance requirements contained in a bid, proposal, or project description, alternate insurance coverage may be considered. Written requests for consideration of alternate coverage must be received by the Director of Purchasing at least ten working days prior to the date set for receipt of bids or proposals. If the City denies the request for alternate coverage, the specified coverage will be required to be submitted. If the City permits alternate coverage, an amendment to the Insurance Requirement will be prepared and distributed prior to the time and date set for receipt of bids or proposals.

1.12 All required insurance coverage must be acquired from insurers authorized to do business in the State of Tennessee, and acceptable to the City. The insurers must also have policyholders' rating of "B++" or better, and a financial size of "Class V" or better in the latest edition of Best's Insurance Reports, unless the City grants specific approval for an exception in the same manner as described in 1.11 above.

1.13 The City may consider deductible amounts as part of its review of financial stability. The Contractor shall assume all deductibles.

2. Contractor's Insurance – Occurrence Basis:

2.1 The Contractor shall purchase the following insurance coverage, including the terms, provisions and limits shown in the Checklist:

Commercial General Liability – The Commercial General Liability policy shall include any or all of the following as indicated on the Checklist:

i. General aggregate limit is to apply per project;

ii. Premises/Operations;

iii. Action of Independent Contractors;

iv. Contractual Liability including protection for the Contractor from claims arising out of liability assumed under this contract;

v. Personal Injury Liability including coverage for offenses related to employment;

vi. Explosion, Collapse, or Underground (XCU) hazards.

Business Automobile Liability including coverage for any owned, hired, or non-owned motor vehicles, Uninsured Motorists insurance, and Automobile Contractual Liability.

Worker's Compensation – statutory benefits as required by the State of Tennessee, or other laws as required by labor union agreements, including standard Other States coverage; Employers' Liability coverage.

3. Commercial General or other Liability Insurance – Claims-made Basis:

If Commercial General or other liability insurance purchased by the Contractor has been issued on a claims-made basis, the Contractor must comply with the following additional conditions. The limits of liability and the extensions to be included as described in the Checklist remain the same. The Contractor must either:

i. Agree to provide certificates of insurance evidencing the above coverage for a period of two years after final payment for the contract. Such certificates shall evidence a retroactive date, no later than the beginning of the Contractors or subcontractors' work under this contract, or

ii. Purchase an extended (minimum two years) reporting period endorsement for the policy or policies in force during the term of this contract and evidence the purchase of this extended reporting period endorsement by means of a certificate of insurance or a copy of the endorsement itself.

4. Alternative Coverage (Self Insurance)

Notwithstanding any of the above, the Contractor may satisfy its obligations under this section by means of self insurance for all or any part of the insurance required, provided that the alternative coverage is acceptable to the City.

5. Limits of Liability Coverage

Specific limits of liability coverage on the Insurance Checklist may be adjusted according to project risk if the adjustment is deemed appropriate and the amended amount is approved by the City Manager.

6. Verification of Compliance

I have read this General Contract Form and agree to all the terms and conditions contained therein.

Contractor's Name: _____

EIN or SSN: _____

Signed by: _____

FOR REVIEW ONLY
NOT TO BE USED FOR BIDDING

Title: _____

Date: _____

This form and the Insurance Checklist must be completed and returned with Certificate of Insurance, as specified, prior to contract award.

FOR REVIEW ONLY
NOT TO BE USED FOR BIDDING

ADDITIONAL INSTRUCTIONS TO BIDDERS

INSURANCE

The attached Insurance Checklist (which includes a section for the Insurance agent to fill-out) and General Contract Form must be completed and returned with the bid package. Successful vendor shall provide certificate of insurance, as specified, prior to contract release by Purchasing.

DRUG FREE WORKPLACE

All bidders must execute the enclosed Drug Free Workplace Affidavit to verify compliance with TCA 50-9-113 and return same with bid response. Failure to comply with this requirement will declare that bid non-responsive.

SECTION I – PURPOSE OF THE DRUG & ALCOHOL TESTING PROGRAM

The City of Johnson City recognizes its responsibility to provide safe and efficient operations for our employees, our citizens and the general public. Our commitment to provide safe and efficient operations is shown by the implementation of programs and procedures which ensure compliance with appropriate safety measures, as well as the letter and intent of all applicable laws and regulations. There is sufficient evidence to conclude that the use of illegal drug/alcohol; drug/alcohol dependence and drug/alcohol abuse seriously impairs an employee's performance and general physical and mental health. The illegal possession and use of drugs, alcohol and/or narcotics by employees of the City is a crime in this jurisdiction and is clearly unacceptable. Therefore, the City of Johnson City has adopted this written policy to ensure an employee's fitness for duty as a condition of employment; to ensure the drug tests and alcohol tests are conducted on safety-sensitive positions in the categories of: pre-employment, random testing, suspicion testing, and return-to-duty testing.

To comply with TCA Title 50 Chapter 9 Part 1, all bidders and/or those proposing to do service with the City must have a testing program of the same or better than the requirements of the City of Johnson City.

REQUIREMENTS FOR BIDS, REQUEST FOR PROPOSALS AND CONTRACTS AND THE GENERAL TERMS & CONDITIONS.

This bid also includes the City's "Requirements For Bids, Requests For Proposals, and Contracts, etc." and "General Terms and Conditions" attached hereto and set forth herein as if verbatim.

INSURANCE CHECKLIST

(P/W Traffic – ITS Project)

REQUIRED COVERAGE (marked by "x") MINIMUM LIMITS

__X__ 1. Worker's Compensation (proprietor/partners/executive officers exclusion not allowed) . . . . . Statutory limits of Tennessee and Employer's Liability . . . . . $100,000/accident, $100,000/disease, $500,000/disease policy limit

__X__ 2. Commercial General Liability (including Premises/Operations) . . . . . $1,000,000 CSL BI/PD each occurrence, $1 Million annual aggregate

__X__ 3. Automobile Liability & Owned/Hired/Non-Owned Vehicles . . . . . $500,000 BI/PD each accident, Uninsured Motorist

__X__ 4. Independent Contractors . . . . . $1,000,000 CSL BI/PD each occurrence, $1 Million annual aggregate

__X__ 5. Products/Completed Operations . . . . . $1,000,000 CSL BI/PD each occurrence, $1 Million annual aggregate

__X__ 6. Contractual Liability . . . . . $1,000,000 CSL BI/PD each occurrence, $1 Million annual aggregate

__X__ 7. Personal and Advertising Injury Liability . . . . . $1,000,000 each offense, $1 Million annual aggregate

__X__ 8. Umbrella Liability . . . . . $1 Million Bodily Injury, Property Damage and Personal Injury

__X__ 9. Per Project Aggregate

10. Professional Liability

_____ a. Architects and Engineers . . . . . $1 Million per occurrence/claim

_____ b. Asbestos Removal Liability . . . . . $2 Million per occurrence/claim

_____ c. Medical Malpractice . . . . . $1 Million per occurrence/claim

_____ d. Medical Professional Liability . . . . . $1 Million per occurrence/claim

_____11. Miscellaneous E & O . . . . . $1 Million per occurrence/claim

_____12. Motor Carrier Act End. (MCS-90) . . . . . $1 Million BI/PD each accident, Uninsured Motorist

_____13. Motor Cargo Insurance

_____14. Garage Liability . . . . . $1 Million Bodily Injury, Property Damage per occurrence

_____15. Garagekeepers Liability . . . . . $500,000 Comprehensive, $500,000 Collision

_____16. Inland Marine-Bailee's Insurance . . . . . $_____

_____17. Moving and Rigging Floater . . . . . Endorsement to CGL

_____18. Dishonesty Bond . . . . . $_____

__X__ 19. Builder's Risk/Installation Floater . . . . . Provide coverage in the full amount of contract

__X__ 20. XCU Coverage . . . . . Endorsement to CGL

__X__ 21. Carrier Rating shall be Best's Rating of B++V or better or its equivalent

__X__ 22. Notice of cancellation, non-renewal or material change in coverage shall be provided to City at least 30 days prior to action. Worker's Compensation and/or non-payment of premium - notification may be 10 days prior to action.

__X__ 23. The City of Johnson City shall be named as Additional Insured on all policies except Worker's Compensation, Auto and Professional Liability. Per Acord 25 (2009/01), policies must be endorsed; please submit copy of endorsement. (Cert. Holder: City of Johnson City, Attn: Purchasing, P.O. Box 2150, Johnson City, TN 37605.)

__X__ 24. Certificate of Insurance shall show project number or other contract identifier used by the City.

_____25. OTHER INSURANCE REQUIRED: _____

FOR REVIEW ONLY
NOT TO BE USED FOR BIDDING

INSURANCE AGENT'S STATEMENT:

I have reviewed the above requirements with the bidder named below. The bidder has coverage with this agency for all of the areas marked with the exception of the following numbers:

_____ _____ _____ _____ _____ _____ Comments: _____

Is Professional Liability excluded under General Liability? Yes_____ No_____

Is Contractual Liability excluded under Comm. General Liability? Yes_____ No_____

Is Independent Contractors excluded under Comm. General Liability? Yes_____ No_____

Carrier ratings: Insurer A_____; Insurer B_____; Insurer C_____; Insurer D_____

AGENCY NAME: _____ AUTHORIZED SIGNATURE: _____

Date: _____

CONTRACTOR'S STATEMENT:

I have reviewed the above requirements with my insurance agent(s) and, if awarded a contract, will provide all coverage marked.

CONTRACTOR'S NAME: _____ AUTHORIZED SIGNATURE: _____

Date: _____

Bid Number: _____

Bid or Project Name: _____

This form and the General Contract Form must be signed and returned with the bid package (if applicable). The Certificate of Insurance must be provided to Purchasing prior to contract award.

CITY OF JOHNSON CITY, TENNESSEE

BID/PROPOSAL
GENERAL TERMS AND CONDITIONS
(Read Carefully)

If there is conflict between the general and Special specifications and the TDOT specifications, the TDOT specification controls.

1. PREPARATION OF BIDS/RFP'S
Only bids submitted on forms furnished by the city will be considered. Bids on company letterhead or quotation sheets will be judged non-responsive. TELEPHONE OR FACSIMILE BIDS WILL NOT BE ACCEPTED. Bids will be sealed in an envelope. **Paper bids shall be sealed in an envelope.** No bid received after closing time shall be considered. The official time for paper bids will be that of the date and time clock in the Purchasing Department. For electronic bids the official time is that of the date and time clock in the Purchasing Department. Late bids will not be accepted. The City of Johnson City shall not be responsible for technical difficulties experienced by vendors trying to register or submit their bid/rfp response electronically less than one hour prior to the bid/rfp opening time. If not offering a bid/proposal response, the vendor is encouraged to complete the "Statement of Decline" form and return prior to solicitation opening.

2. SIGNATURE ON BIDS
When submitting a bid, other than electronically, the bid form must contain the full name and address of the company and be signed in Ink by a person authorized to bind that company to a contract. Submission of an electronic solicitation constitutes acceptance of all terms and conditions. Unsigned paper bids will not be considered, read or tabulated. They may not be signed during or after the bid opening, even if a representative is present.

3. PRICING
All pricing must appear in the spaces provided on the city's form (if applicable) and be in ink. Changes or corrections by the bidder/proposer must be initialed in ink by the person signing. No corrections may be made in pencil. Unit prices will prevail in case of an extension error. The City will correct math computation errors (unit price & totals). No bid may be altered or amended after bid opening time. Obvious mistakes will be given special consideration upon receipt of written request and full disclosure or evidence regarding pricing error.

4. BID/RFP OPENINGS
Bids/RFP's (paper & electronic) will be read aloud at the specified date and time as stated in the document. All openings are public meetings. All bidders/proposers and interested persons are invited to attend. The City reserves the right to postpone any bid/rfp opening under circumstances warranting such action, including but not limited to instances when the City receives fewer than two responses.

5. EXAMINATION OF BIDS/RFP'S
Bids/RFP's and associated documents will be closed for review and inspection during the evaluation period prior to award.

6. COOPERATIVE PURCHASING:
Bidders/Proposers are to indicate whether it is permissible for other governments in Tennessee to purchase these items or services at the same price. Freight charges can be adjusted to reflect differences in delivery costs.

7. BID TABULATIONS/RFP RESPONSES
Bid tabulations and RFP respondent's lists will be posted and available no later than the next business day on our website: http://www.johnsoncitytn.org/purchasing/.

8. MULTIPLE ITEM BIDS
The City will determine the successful bidder(s) on the basis of the total of all items.

9. BID/RFP EVALUATION

Bids/RFP's will be evaluated according to the criteria set forth in the document with the degree of importance determined by the City.

10. ACCEPTANCE, REJECTION AND POSTPONEMENT
Issuance of a bid/rfp does not commit the City to make an award. The City reserves the right to postpone or reject any or all bids/rfp's, to waive informalities and to accept the bid/rfp judged to be in the best interest of the City.

11. AWARD
An award, if made, shall be to the lowest responsible, responsive bidder(s) or best proposal meeting quality and performance standards as described in the solicitation documents and whose bid/rfp is determined to be in the best interest of the City.

12. AWARD PERIOD
The City shall have 60 days to issue a contract. Any contract past that period must be mutually agreed upon by both parties.

13. FOB POINT
All prices quoted shall be FOB delivered to the using department, City of Johnson City, TN unless otherwise stated in the solicitation document. Risk of loss and/or damage shall be upon the Seller until such time as the goods have been physically delivered and accepted by the City.

14. DISCOUNT AND PAYMENT
Payment terms are Net 30 following receipt of the material or service and a correct invoice unless otherwise stated in the solicitation document. Discounts for prompt payment will not be considered in the bid evaluation for award. Partial payment will be allowed only if addressed in the solicitation.

15. TAXES
The City is exempt from Federal excise tax, State, and city sales tax. Contractors are not exempt from the use tax on materials and supplies used in the production of an item or in the performance of a repair or construction contract. Tax exemption certificates will be furnished upon request.

16. TERM OF CONTRACT
Unless otherwise stated, the City reserves the right to purchase like items at the same contract price for a period of one year from the award date subject to agreement of both parties. The City may cancel any contract for cause following written notification of intent.

17. ORAL INSTRUCTIONS
No oral interpretations or instructions given by any city employee or any other person shall apply. Changes relative to any solicitation will be in writing to all known interested parties and posted on the City's website. These addendums will originate either from the Purchasing Department or the issuing Architect.

18. DELIVERY
Delivery/completion schedule must be clearly identified and realistically stated, as this may be a determining factor in the award.

19. SAFETY STANDARDS
All manufactured items and fabricated assemblies shall comply with applicable requirements of OSHA and any related standards thereto.

20. BRAND NAMES

By referencing a brand name or equal, the City intends to establish a minimum level of quality by which alternate offers can be judged. If an alternate is offered, the vendor must include complete descriptive literature and specifications that clearly describe the item and how it differs from the referenced item. Vendor reference to literature previously submitted will not satisfy this provision. Unless specified otherwise, it is understood that the referenced product will be furnished. The City alone will determine whether an alternate is equivalent and meets the standards of quality and performance for the City's use. A sample or demonstration may be required at the expense of the vendor.

21. EQUAL OPPORTUNITY

It is the policy of the City of Johnson City to ensure compliance with Title VI of the Civil Rights Act of 1964; 49 CFR, Part 21; related statutes and regulations to that end that no person shall be excluded from participation in or be denied benefits of, or be subjected to discrimination under any program or activity receiving Federal financial assistance or any other funding source on the grounds of race, color, sex, national origin, or ancestry. By virtue of submitting a response to this solicitation, vendors agree to comply with the same non-discrimination policy.

22. SAMPLES

Samples will be furnished at no charge to the City. They will remain in the Purchasing Department for testing and evaluation until an award is made. Vendors are responsible for picking up their samples within two (2) weeks after the award. Samples not collected after that time shall become the property of the City. Samples from the successful vendor will be held until delivery is received and accepted as being equal to the sample.

23. CONDITION STANDARDS

It is understood and agreed that any item offered or shipped as a result of this solicitation shall be new and unused and the manufacturer's latest model unless otherwise called for in the solicitation.

24. INSPECTION

All supplies or materials purchased as a result of this solicitation are subject to inspection and rejection by the City. Rejected materials will be returned at the vendor's expense.

25. PARTS AND SERVICE

The successful vendor must be able to provide adequate parts and service for all items awarded. Service location and ability to perform may be a consideration in the award.

26. WARRANTY

Unless otherwise specified by the City, all items shall be guaranteed for a minimum period of one (1) year against defects in material and workmanship.

27. LICENSES, FEES, PERMITS

The contractor is responsible for furnishing the proper licenses, fees, and permits required by law to do business with the City of Johnson City in completion of the project. All work shall be done in accordance with the latest building codes, state and federal laws relative to public works contracts.

28. INSURANCE

The contractor shall maintain, at his expense, such insurance as will protect him from claims under Worker's Compensation Act and from claims of damages because of bodily injury, including death and damage to the property of others and claims for damages which may arise during operations under this contract whether such operations be by himself or by any subcontractor of anyone directly or indirectly employed by either of them. Any required insurances shall be maintained for the term of the contract.

29. INDEMNIFICATION

The vendor shall guarantee and certify by submitting a response to this solicitation that if successful, they shall indemnify and defend the City against any and all claims or legal actions arising as a result of their performance of the contract, whether or not such claims relate to damages or alleged damages sustained by physical injury to contractors personnel, subcontractors, city employees or other persons, or against any lawsuits arising from alleged or actual patent infringements, and shall hold the City, its various departments, employees, and any and all persons or entities acting on its behalf harmless from the same.

30. DEFAULT

In case of contractor default or failure to provide material or service according to the solicitations, the City may cancel this contract and acquire from another source and may recover any excess cost by (1) invoice; (2) deduction from an unpaid balance due; (3) collection against the bid and/or performance bond; or (4) a combination of the aforementioned remedies or other remedies provided by law. All costs associated with default will be borne by the contractor. The City reserves the right to remove a company in default from the active vendor list for a time period to be determined by the Director of Purchasing.

31. PENALTIES

Vendors may be removed from our active vendor system for any of the following:

- Failure to respond to three consecutive solicitations
- Failure to meet delivery requirements
- Failure to furnish items as a result of a solicitation
- Failure to provide service or material as a result of the award
- Offers of gratuities or favors to any City employee

32. NON-COLLUSION AGREEMENT

By submitting this solicitation, the agent representing all officers, partners, owners, representatives, employees or interested parties of the vendor's firm certifies to the best of his/her knowledge and belief this bid/proposal to the City of Johnson City, Tennessee has not been prepared in collusion with any other seller, proprietor, or manufacturer of similar products or services. The agent also certifies that the prices, terms and conditions of said bid/proposal have been arrived at independently and have not been communicated by the submitter, nor by any of the aforementioned firm associate to any other seller, proprietor, or manufacturer of similar products or services and will not be communicated prior to the official opening of said solicitation. The agent further states that no official or employee of the City of Johnson City has promised any personal, financial or other beneficial interest, either directly or indirectly, in order to influence award of this solicitation.

(Rev. 01-11-12)

STATE OF TENNESSEE

TENNESSEE DEPARTMENT OF TRANSPORTATION

MINIMUM WAGE SCALES FOR FEDERAL AID HIGHWAY CONSTRUCTION

Publication Date: January 6, 2012
General Decision Number: **TN120002**
Modification No.: 0

Superseded General Decision No.: TN20100002

Construction Types: Highway

Counties: Tennessee Statewide

HIGHWAY CONSTRUCTION PROJECTS : (excluding tunnels, building structures in rest area projects & railroad construction; bascule, suspension & spandrel arch bridges designed for commercial navigation, bridges involving marine construction; and other major bridges).

CLASSIFICATION	**Rates**
Bricklayer	$16.62
Carpenter	$16.10
Cement Mason/Concrete Finisher	$13.91
Electrician	$21.62
Ironworkers	
-Reinforcing	$15.90
-Structural	$17.15
Traffic Controller	$16.98
Painter & Sandblaster	$21.54
Powder Person	$17.79
Power Equipment Operators	
- Group 1	$17.14
- Group 2	$15.26
- Group 3	$15.75
- Group 4	$14.19
Drill Operator (Caisson)	$18.43
Farm Tractor Operator (Power Broom)	$12.58
Sweeping Machine (Vacuum) Operator	$13.39
Heavy Duty Mechanic	$18.04
Light Duty Mechanic	$16.27
Truck Drivers	
- 2 Axles	$13.02
- 3 - 4 Axles	$12.91
- 5 or more Axles	$15.24
- Heavy Duty Off-Road	$12.98
Laborers	
- Common/Unskilled	$11.50
- Skilled	$13.34

WELDERS - Receive rate prescribed for craft performing operation to which welding is incidental.

LABORER CLASSIFICATIONS

Skilled Laborers: Air tool operator, Asphalt Raker, Chain saw operator, Concrete Mixer (Less than 1 yard), Concrete Rubber, Edger, Fence Erector, Form Setter (Steel), Guard Rail Erector, Mechanic's Tender (Tire Changer or Oiler), Mortar Mixer, Nozzleman or Gun Operator (Gunite), Pipelayer, Sign Erector.

POWER EQUIPMENT OPERATOR CLASSIFICATIONS

GROUP 1: Backhoe/Hydraulic Excavator (3/4 yard & over), Crane, End Loader (3 yards & over), Motor Patrol (Rough), Tractor (Crawler/Utility), Scraper, Shovel, Trenching Machine.

GROUP 2: Backhoe/Hydraulic Excavator (Less than 3/4 yard), Bull dozer or Push dozer, End Loader (Less than 3 yards), Motor Patrol (Rough), Tractor (Crawler/Utility), Scraper, Shovel, Trenching Machine.

GROUP 3: Asphalt Paver, Concrete Finishing Machine, Concrete Paver, Scale, Spreader (Self-Propelled), Concrete Grinder, Asphalt Milling Machine, Boring Machine Operator (Horizontal).

GROUP 4: Bobcat, Central Mining Plant, Concrete Pump, Concrete Saw, Curb machine (Automatic or Manual), Dozer or Loader (Stockpile), Drill(piling), Mulcher or Seeder, Rock Drill (truck mounted), Roller (asphalt), Roller(compaction self-propelled), Soil Stabilization Machine, Tractor (boom & hoist), Bituminous Distributor Machine, Pump, Track Drill, Striping Machine

---

STATE OF TENNESSEE

TENNESSEE DEPARTMENT OF TRANSPORTATION

2012 MINIMUM WAGE SCALES FOR STATE FUNDED CONSTRUCTION

December 15, 2011 **Tenn. DOL Decision No. T-33823**

CLASSIFICATION (ENGLISH)	CLASSIFICATION (SPANISH)	Basic Hourly Rates	Craft No.
Bricklayer	Ladrillero	19.82	01
Carpenter / Leadsperson	Carpintero o Lider	16.33	02
Class "A" Operators	Operador Clase A	17.98	03
Class "B" Operators	Operador Clase B	15.74	04
Class "C" Operators	Operador Clase C	16.55	05
Class "D" Operators	Operador Clase D	15.44	06
Concrete Finisher	Terminador de Cemento	14.70	07
Drill Operator (Caisson)	Operador de Perfordora	23.13	08
Electrician	Electricista	21.35	09
Farm Tractor Operator (Power Broom)	Operador de Tractor de Rancho	12.77	10
Ironworkers (Reinforcing)	Herrero	15.86	11
Ironworkers (Structural)	Herrero de Estructura	16.60	12
Mechanic (Class I) Heavy Duty	Mecanico Clase 1	20.05	13
Mechanic (Class II) Light Duty	Mecanico Clase 2	18.24	14
Painter / Sandblaster	Pintor o Lajador	23.08	15
Powder Person / Blaster	Proveedor de Explosivos	18.84	16
Skilled Laborer	Obrero Diestro	14.51	17
Survey Instrument Operator	Operador de Agrimensor	23.54	18
Sweeping Machine (Vacuum) Operator	Operador de Barredora	14.35	19
Truck Driver (2 axles)	Camionero (2 ejes)	14.37	20
Truck Driver (3/4 axles)	Camionero (3 o 4 ejes)	13.79	21
Truck Driver (5 or more axles)	Camionero (5 o más ejes)	16.13	22
Laborer /Unskilled , Flagger, Traffic Control, Pickup Driver	Obrero no Diestro	12.41	23
Worksite Traffic Coordinator	Coordinar de Trafico en el Lugar de Trabajo	18.17	24

CLASSIFICATION	**CRAFT NO.**
SKILLED LABORER:	**17**

Air Tool Operator, Asphalt Raker, Chain Saw Operator, Concrete Mixer Operator (less than 1 yard), Concrete Rubber/Edger, Fence Erector, Form Setter (Steel Road), Guardrail Erector, Mechanic's Helper (Tire Changer or Oiler), Mortar Mixer, Nozzelman or Gun Operator (Gunite), *Pipelayer, Sign Erector

CLASS "A" OPERATORS: 03

Backhoe/Hydraulic Excavator (3/4 yard and over), Crane, End Loader (3 yards and over), Motor Patrol (Finish), Pile Driver, Dragline

CLASS "B" OPERATORS: 04

Backhoe/Hydraulic Excavator (less than 3/4 yard), Bull Dozer or Push Dozer, End Loader (less than 3 yards), Motor Patrol (Rough), Tractor (Crawler/Utility), Scraper, Shovel, Trenching Machine, Truck Driver (Heavy Duty, Off- Road)

CLASS "C" OPERATORS: 05

Asphalt Paver, Concrete Finishing Machine, Concrete Paver, Scale, Spreader (Self-Propelled), Concrete Grinder, Asphalt Milling Machine, Boring Machine Operator (Horizontal)

CLASS "D" OPERATORS: 06

Bobcat, Central Mixing Plant, Concrete Pump, Concrete Saw, Curb Machine (Automatic or Manual), Dozer or Loader (Stockpile), Drill (Piling), Mulcher or Seeder, Rock Drill (Truck Mounted), Roller (Asphalt), Roller (Compaction Self-Propelled), Soil Stabilization Machine, Tractor (Boom & Hoist), Bituminous Distributor Machine, Pump, Track Drill, Striping Machine Operator, Ditch Paving Machine

***Skilled Laborer - Pipelayer Classification**

For any work where prevailing wage rates apply which is located five feet or more outside the actual building if building construction is involved:

AND

(a) which consists of the building, rebuilding, locating, relocating or repairing any street, highway, bridges, water lines, sewer lines, gas lines, force mains or other related utilities

OR

(b) which involves the construction or upgrading of industrial parks or sites and is located outside the five foot limitation.

The classification of pipelayer shall be applicable and the description of work under this classification shall be as follows:

Lays, connects, inspects and tests water lines, force mains, gas lines, sanitary or storm sewers and drains, underground telephone and electric ducts or other utilities manufactured from clay, concrete, steel, plastic, cast iron pipe or other similar materials.

May smooth bottom of trench to proper elevation by scooping with a shovel; receives pipe lowered from top of trench; inserts spigot end of pipe into bell end of last laid pipe; adjusts pipe to line and grades, caulks and seals joint with cement or other sealing compound; may connect threaded or flanged joint pipe; may assemble and place corrugated metal or plastic pipe and performs other related duties.

Additional Information :

Wage Rates : http://www.tennessee.gov/labor-wfd/prevail.html

Poster Page : http://www.state.tn.us/labor-wfd/poster.htm

Note: Adobe Acrobat Reader is required in order to download & print. If you do not have this software a link is provided at the bottom of the Poster Page for a free download.

Tenn.Dept. of Labor & Workforce Development (Labor Standards Division) : (615) 741-2858.

APPRENTICESHIP REGULATIONS:

Under T.C.A., §12-449, the Prevailing Wage Commission has promulgated Rule 0800-3-2-.04 which provides that: "Apprentices shall mean those persons registered individually under a bona fide apprenticeship program registered with the Bureau of Apprentiship and Training in the United States Department of Labor. The state agency contracting officer shall require the contractor or sub-contractor using the apprentice to submit evidence of his indenture and/or apprenticeship registration when the apprentice's name first appears on a submitting payroll."

AUTHORITY: T.C.A., §12-449. Administrative History: Original Rule filed June 4, 1976. Effective: July 14, 1976.

PROPOSAL

TO THE CITY OF JOHNSON CITY

JOHNSON CITY, TENNESSEE

By submitting this Proposal, the undersigned bidder represents that it has carefully examined the site of the work described herein, has become familiar with local conditions and the character and extent of the work; has carefully examined the Plans, the most current version of the Standard Specifications for Road and Bridge Construction and the Standard Roadway and Structures Drawings adopted by the State of Tennessee, Department of Transportation, with subsequent revisions which are acknowledged to be a part of this Proposal, the Special Provisions, the Proposal Form, the Form of Contract, and the Form of Contract Payment and Performance Bond; and thoroughly understands their stipulations, requirements, and provisions.

The undersigned bidder has determined the quality and quantity of materials required; has investigated the location and determined the sources of supply of the materials required; has investigated labor conditions; and, has arranged for the continuous prosecution of the work herein described.

By submitting this Proposal, the undersigned bidder agrees to provide all necessary equipment, tools, labor, incidentals, and other means of construction, to do all the work, and furnish all the materials of the specified requirements which are necessary to complete the work in accordance with the Plans, and the Specifications, and agrees to accept as payment in full the unit prices for the various items described in the Specifications that are set forth in this Proposal. The bidder understands that the quantities of work specified are approximate only and are subject to increase or decrease and that any such increase or decrease will not affect the unit prices set forth in this Proposal. Compensation for “extra work” which may be required by the CITY in connection with the construction and completion of the work but which was not reflected in the Plans and Specifications at the time of bidding, will be made in the following manner: work for which there is a unit price set forth in this Proposal will be compensated at that unit price; work for which there is no unit price set forth in this Proposal will be compensated in accordance with the applicable Tennessee Department of Transportation Standard Specifications.

By submitting this Proposal, the undersigned bidder hereby agrees to be bound by the award of the Contract and, if awarded the Contract on this Proposal, to execute the required Contract and the required Contract Payment and Performance Bond within ten (10) days after receipt of notice of the award. The undersigned bidder submits herewith the required Proposal guaranty in an amount of not less than five percent (5%) of the total amount of the Proposal offered and agrees and consents that the Proposal guaranty shall immediately be at the disposal of the CITY, not as a penalty, but as an agreed liquidated damage if the required Contract and Contract Payment and Performance Bond are not executed within ten (10) days from receipt of the notice of award.

THIS PROPOSAL SUBMITTED BY:

_____
Bidder (1)

By: _____

_____
Printed Name and Title

_____
Address

_____
City/State/Zip

Bidder (1) being a _____ composed of officers, partners, or owners as follows:
(Type of business entity)

_____
Name/Title Name/Title

_____
Name/Title Name/Title

_____
Name/Title Name/Title

FOR REVIEW ONLY
NOT TO BE USED FOR BIDDING

_____
Bidder (2)*

By: _____

_____
Printed Name and Title

_____
Address

_____
City/State/Zip

Bidder (2) being a _____ composed of officers, partners, or owners as follows:
(Type of business entity)

_____
Name/Title Name/Title

_____
Name/Title Name/Title

_____
Name/Title Name/Title

*NOTE: The signature and information for Bidder (2) is to be provided when there is a joint venture.

BID FORM ITEM NO.	JOHNSON CITY ITS AND TMC DESCRIPTION	UNIT	QUANT	UNIT PRICE	TOTAL PRICE
712-01	TRAFFIC CONTROL	LS	1		
716-02.05	PLASTIC PAVEMENT MARKING (STOP LINE)	L.F.	792		
716-03.02	PLASTIC WORD PAVEMENT MARKINGS (RXR)	EACH	20		
713-16.20	SIGNS (R15-1)	EACH	11		
713-16.21	SIGNS (W10-1)	EACH	11		
713-16.22	SIGNS (W10-2L)	EACH	8		
713-16.23	SIGNS (W10-2R)	EACH	8		
717-01	MOBILIZATION	LS	1		
725-07.08	NETWORK SWITCH (TYPE 'A')	EACH	79		
725-07.09	NETWORK SWITCH (TYPE 'B')	EACH	2		
725-07.44	FIBER OPTIC SPLICE (FUSION)	EACH	778		
725-07.63	AS-BUILT PLANS	LS	1		
725-07.65	SPARE PARTS	LS	1		
725-07.66	BURN-IN PERIOD	LS	1		
725-07.67	TRAINING	LS	1		
725-10.10	CCTV CAMERA SYSTEM (TUBE)	EACH	17		
725-10.11	CCTV CAMERA SYSTEM (DOME)	EACH	26		
725-10.12	CABINET (TYPE B) POLE MOUNTED	EACH	8		
725-10.13	CABINET (TYPE B) PAD MOUNTED	EACH	2		
725-10.16	FO CLOSURE 72F	EACH	70		
725-10.17	TERMINAL SERVER	EACH	70		
725-10.18	RS 2324 WIRE FSK MODEM	EACH	1		
725-10.19	FIBER OPTIC DROP PANEL (12F)	EACH	80		

FOR REVIEW ONLY
NOT TO BE USED FOR BIDDING

BID FORM ITEM NO.	JOHNSON CITY ITS AND TMC DESCRIPTION	UNIT	QUANT	UNIT PRICE	TOTAL PRICE
725-10.20	FO TERMINATION CABINET(48F)	EACH	24		
725-10.21	FO TERMINATION CABINET (144F)	EACH	2		
725-10.22	CCTV POLE (50FT POLE HEIGHT)	EACH	6		
725-10.23	OVERHEAD UTILITY RELOCATION	LS	1		
725-10.24	PULL BOX (FIBER OPTIC - TYPE D)	EACH	87		
725-10.25	PULL BOX (FIBER OPTIC - TYPE E)	EACH	48		
725-10.26	MODIFY EXISTING CONDUIT (INSTALL PULL BOX)	EACH	9		
725-10.27	MODIFY EXISTING CONDUIT (SPLICE CONDUIT)	EACH	24		
725-10.28	FIBER OPTIC CABLE, 48F (AERIAL)	L.F.	26103		
725-10.29	FIBER OPTIC CABLE, 48F (IN CONDUIT)	L.F.	44275		
725-10.30	FIBER OPTIC CABLE, 12F (SMFO DROP CABLE)	L.F.	18060		
725-10.31	OUTDOOR RATED CATEGORY 5E CABLE	L.F.	70		
725-10.32	REMOVE EXISTING CABLE FROM CONDUIT	L.F.	18150		
725-10.33	RISER ASSEMBLY (2", RGS)	EACH	4		
725-10.34	RISER ASSEMBLY (FIBER RISER)	EACH	27		
725-10.35	CABINET ENTRANCE (CONDUIT AND ASSEMBLY)	EACH	35		
725-10.36	JACKED AND BORED CONDUIT	L.F.	14695		
725-10.37	TRENCHING FOR NEW CONDUIT INSTALLATION	L.F.	14755		
725-10.38	CONDUIT (2" DIA, HDPE)	L.F.	51580		
725-10.39	CONDUIT (1" DIA, RGS)	L.F.	300		
725-10.40	REMOVAL OF CONDUIT	L.F.	1065		
725-10.41	MODIFY CABINET (INTEGRATE FO EQUIPMENT)	EACH	68		
725-10.42	MODIFY CABINET (MODIFY/REPLACE CONDUIT ELBOW ACCESS)	EACH	3		

NOT FOR REVIEW ONLY
NOT TO BE USED FOR BIDDING

BID FORM ITEM NO.	JOHNSON CITY ITS AND TMC DESCRIPTION	UNIT	QUANT	UNIT PRICE	TOTAL PRICE
725-10.43	MODIFY CABINET (ELECTRICAL)	EACH	6		
725-10.44	PULL BOX TYPE C	EACH	29		
725-10.45	STREAM GAUGE	EACH	4		
725-10.46	PAVEMENT SENSOR	EACH	12		
725-10.47	WEATHER STATION	EACH	2		
725-10.48	FO INDOOR/OUTDOOR CABLE 144F	L.F.	200		
725-10.49	CORRUGATED RACEWAY	L.F.	100		
725-10.50	DEMARCATION POINT ASSEMBLY	EACH	8		
725-10.51	CABINET (TYPE C) PAD MOUNTED	EACH	5		
725-10.52	FIBER OPTIC CABLE, 144F (IN CONDUIT)	L.F.	4900		
730-05.01	ELECTRICAL SERVICE CONNECTION	EACH	8		
730-05.03	SERVICE CABLE (3 CONDUCTOR #6 AWG)	L.F.	4635		
801-02	SEEDING (WITHOUT MULCH)	UNIT	9		
801-03	WATER (SEEDING AND SOD)	M.G.	500		
803-01	SODDING	SY	2000		
920-10.01	TMC SOFTWARE	LS	1		
920-10.02	TMC HARDWARD	LS	1		
920-10.03	TMC FINISHES	LS	1		
920-10.04	TMC VIDEO WALL	EACH	1		
920-10.05	REMOVE EXISITNG PULLBOXES	LS	1		
920-10.06	SIDWALK REPLACEMENT	SY	224		

FOR REVIEW ONLY
NOT TO BE USED FOR BIDDING

BID FORM ITEM NO.	JOHNSON CITY ITS AND TMC DESCRIPTION	UNIT	QUANT	UNIT PRICE	TOTAL PRICE

TOTAL QUANTITIES BID PRICE $ _____

_____

(Total Amount in Words)

FOR REVIEW ONLY
NOT TO BE USED FOR BIDDING

PROPOSAL CERTIFICATION

The undersigned, being first duly sworn, certifies on behalf of the bidder that it has not, either directly or indirectly, entered into any agreement, participated in any collusion, or otherwise taken any action in restraint of free competitive bidding in connection with this Proposal or Contract. This is an official document that is required or authorized by law to be made under oath and is presented in an official proceeding. A person who makes a false statement in this certification is subject to the penalties of perjury.

The undersigned further certifies that said bidder is not under the control of any person, firm, partnership, or corporation, which has or exercises any control of any other person, firm, partnership, or corporation, which is submitting a bid on this Contract.

_____ Sworn to and subscribed before me

Bidder (1)

this _____ day of _____, _____

By: _____

_____

Printed Name and Title Notary Public

My commission expires _____

(Seal)

FOR REVIEW ONLY
NOT TO BE USED FOR BIDDING

_____ Sworn to and subscribed before me

Bidder (2)

this _____ day of _____, _____

By: _____

_____

Printed Name and Title Notary Public

My commission expires _____

(Seal)

*NOTE: The signature and information for Bidder (2) is to be provided when there is a joint venture.

CITY OF JOHNSON CITY

JOHNSON CITY, TENNESSEE

PROPOSAL BOND

CONTRACT NO. _____

Principal: _____
Print Name of Principal

Surety: _____
Print Name of Surety

KNOW ALL MEN BY THESE PRESENTS, that we, the Principal and Surety above named, are held and firmly bound unto the CITY in the full and just sum of five percent (5%) of the total amount bid by the Principal for the project stated above, for the payment of which sum well and truly to be made, we bind ourselves, our heirs, executors, administrators, and successors, jointly and severally, firmly by these presents.

NOW, THEREFORE, the condition of this obligation is: the Principal shall not withdraw its bid within sixty (60) days after the opening of the bids, or within such other time period as may be provided in the Proposal, and if the CITY shall award a Contract to the Principal, the Principal shall, within ten (10) days after written notice of the award is received by him, fully execute a Contract on the basis of the terms, conditions and unit prices set forth in his Proposal or bid and provide bonds with good and sufficient surety, as required for the faithful performance of the Contract and for the protection of all persons supplying labor, material, and equipment for the prosecution of the work. In the event the Principal withdraws its bid after bids are opened, or after award of the Contract has been made fails to execute such the Contract and/or such additional documents as may be required and to provide the required bonds within the time period specified above, then the amount of the Proposal Bond shall be immediately paid to the CITY, not as a penalty, but as agreed upon liquidated damages.

IN WITNESS WHEREOF, the Principal has caused these presents to be signed by a duly authorized official and the Surety has caused these presents to be duly signed and sealed by an authorized agent or attorney-in-fact.

NOT FOR REVIEW ONLY
NOT TO BE USED FOR BIDDING

Principal (1)	Surety (1)
By:	By:
	General Agent or Attorney-in-Fact
Print Name and Title	Date
Date	(Seal)

Principal (2)	Surety (2)
By:	By:
	General Agent or Attorney-in-Fact
Print Name and Title	Date
Date	(Seal)

*NOTE: The signature and information for Principal(2) and Surety(2) is to be provided when there is a joint venture.

FOR REVIEW ONLY
NOT TO BE USED FOR BIDDING

CITY OF JOHNSON CITY

JOHNSON CITY, TENNESSEE

PROPOSAL GUARANTEE

CONTRACT NO. _____

Bidder: _____
Print Name of Bidder

KNOW ALL MEN BY THESE PRESENTS, that the above-named Bidder has tendered the attached cashier's or certified check in an amount equal to five percent (5%) of the total amount it bid for the project stated above, payable to the CITY, to be held pending the fulfillment of the following obligation conditions.

NOW, THEREFORE, the condition of this obligation is: the Bidder shall not withdraw its bid within sixty (60) days after the opening of the bids, or within such other time period as may be provided in the Proposal, and if the CITY shall award a Contract to the Bidder, the Bidder shall, within ten (10) days after it receives written notice of the award, fully execute a Contract on the basis of the terms, conditions and unit prices set forth in its Proposal or bid and provide bonds with good and sufficient surety, as required for the faithful performance of the Contract and for the protection of all persons supplying labor, material, and equipment for the prosecution of the work. In the event the Bidder withdraws its bid after bids are opened, or after award of the Contract has been made fails to execute such the Contract and/or such additional documents as may be required and to provide the required bonds within the time period specified above, then the CITY shall cash the attached check and retain the funds, not as a penalty, but as agreed upon liquidated damages.

IN WITNESS WHEREOF, the Bidder has caused these presents to be signed by a duly authorized official.

FOR REVIEW ONLY
NOT TO BE USED FOR BIDDING

Bidder (1)	Bidder (2)*
By:	By:
Print Name and Title	Print Name and Title
Date	Date

*NOTE: The signature and information for Bidder(2) is to be provided when there is a joint venture.

CITY OF JOHNSON CITY

JOHNSON CITY, TENNESSEE

CONTRACT NO. _____

This agreement is made and executed in three (3) originals, between the CITY, and _____ hereinafter referred to as the "Contractor."

WITNESSETH

The CITY did advertise for, receive and accept a bid from the Contractor for work on the above identified contract.

In consideration of the agreements herein contained, to be performed by the parties hereto and of the payments hereafter agreed to be made, it is mutually agreed by both parties that:

1. The contract between the parties consists of the following "Contract Documents" all of which constitute one instrument:
   (a) the Instructions to Bidders
   (b) the Proposal
   (c) all conditions and terms of this Contract form
   (d) the Contract Payment & Performance Bond and/or Letter of Credit, where applicable
   (e) the most current version of the Tennessee Department of Transportation Standard Specifications for Road and Bridge Construction (herein referred to as TDOT Standard Specifications)
   (f) Supplemental Specifications
   (g) Revisions and Additions
   (h) Special Provisions
   (i) Addenda
   (j) The most current version of the TDOT Standard Drawings
   (k) The Contract Plans,
   (l) The Work Order
   (m) Construction Changes
   (n) Supplemental Agreements

   All of the provisions contained in the listed Contract Documents are incorporated herein by reference with the same force and effect as though set out in full.

2. The Contract Documents are intended to be complementary and to describe and provide for a complete work. Requirements in one of these are as binding as if occurring in all of them. In case of discrepancy, Supplemental Specifications will govern over the TDOT Standard Specifications; the TDOT Standard Specifications will govern over the local government standard specifications; the Contract Plans will govern over both Supplemental and Standard Specifications, and Special Provisions will govern over both Plans and Specifications. In interpreting Plans, calculated dimensions will govern over scaled dimensions. Contract Plans, typical cross sections and approved working drawings will govern over Standard Drawings.

NOT FOR REVIEW ONLY
NOT TO BE USED FOR BIDDING

3. The Contractor agrees to furnish all materials, equipment, machinery, tools and labor and to perform the work required to complete the project in a thorough and workmanlike manner, to the satisfaction of the appropriate official of the CITY.

4. The CITY agrees to pay to the Contractor such unit prices for the work actually done as are set out in the accompanying proposal, in the manner provided for in the TDOT Standard Specifications, Supplemental Specifications and applicable Special Provisions.

5. The Contractor shall, at all times, observe and comply with all applicable federal, state and local laws, ordinances and regulations and shall indemnify and hold harmless the CITY and all of its officers, agents and servants against any claim of liability or assessment of fines or penalties arising from or based upon the Contractor's and/or its employees' violations of any such law ordinance or regulation. The Contractor shall maintain documentation for all charges against the CITY under this Contract. The books, records and documents of the Contractor insofar as they relate to the work performed or money received under this contract shall be maintained for a period of three (3) full years from the date of the final payment and shall be subject to audit at any reasonable time and upon reasonable notice by the CITY, the State, the Comptroller of the Treasury, the Tennessee Department of Transportation, or their duly appointed representatives.

6. The Contractor shall be responsible for any and all injury or damage to persons or to property arising from the prosecution of the work and due to any act, omission, neglect or misconduct in its manner or method of prosecuting the work or due to its non-execution of the work or due to defective work or materials. The Contractor shall provide proof of adequate and appropriate general liability insurance providing liability coverage in an amount not less that $1 million dollars per occurrence and $300,000 per claimant, naming the CITY as an additional insured.

7. The Contractor shall indemnify and hold harmless the CITY and all of its officers, agents and employees from all suits, actions or claims of any character arising from the Contractor's acts or omissions in the prosecution of the work, use of unacceptable materials in constructing the work, infringement of patent, trade mark or copyright, or claims for Workers' Compensation. If any such suit, action or claim is filed, the CITY may retain from the monies due to the Contractor under this Contract a sum deemed sufficient by the CITY to protect the CITY from loss therefrom. Upon resolution of the suit, action or claim, any remaining retained funds will be released.

8. Upon execution of this Contract, the Contractor shall be prepared to begin the work to be performed under the Contract, but will not proceed until it has received official "Notice to Proceed". This official notice will stipulate the date upon which it is expected that the Contractor will begin his work, and from which date the working days tabulated against its time limit will begin. All other requirements in regard to the beginning of construction set forth in the Proposal and Special Provisions will date from the official notice.

IN WITNESS WHEREOF, the parties hereto have cause this Contract to be signed and executed by their respective authorized agents or officials.

Contractor 1	Contractor 2*
By:	By:
Print Name and Title	Print Name and Title
Date	Date

CITY OF JOHNSON CITY

JOHNSON CITY, TENNESSEE

This Contract is accepted this day of _____, _____

and is effective on the day of _____, _____

_____
[CITY/COUNTY Official]

Approved:

_____
CITY Attorney

*NOTE: The signature and information for Contractor 2 is to be provided when there is a joint venture.

FOR REVIEW ONLY
NOT TO BE USED FOR BIDDING

CONTRACT PAYMENT AND PERFORMANCE BOND

CONTRACT NO. _____

Be it known that _____, as Principal, and_____, as Surety(ies), all authorized to do business in the State of Tennessee, hereby bind themselves to the CITY, and other potential claimants, for all obligations incurred by the Principal under its contract with CITY, for the construction of the above identified contract; in the full contract amount of _____ _____($_____).

The obligations of the Principal and Surety(ies) under these payment and performance bonds shall continue in full force and effect until all materials, equipment and labor have been provided AND all requirements contained in the contract, plans and specifications have been completed in a timely, thorough and workmanlike manner. The parties agree that these bonds are statutory in nature and are governed by the provisions contained in Title 12, chapter 4 and Title 54, chapter 5 of the Tennessee Code Annotated relating to bonds required of contractors and that those provisions constitute a part of this bond.

By this instrument, the Principal and Surety(ies) specifically bind themselves, their heirs, successors, and assigns, in solido, under the following bonds:

Payment Bond. To the CITY and all "Claimants," as contemplated by T.C.A. Title 54, chapter 5, in the full contract amount of _____ _____ ($_____), in order to secure the payment in full of all timely claims under the project.

Performance Bond. To the CITY in the full contract amount of _____ _____($_____), in order to secure the full and faithful performance and timely completion of the project according to its plans and specifications, inclusive of overpayments to the contractor and liquidated damages as assessed.

Upon receipt of notice that the Principal is in default under the contract, the Surety(ies) shall undertake to complete performance, without regard to cost. If the Surety(ies) fail or refuse to complete performance of the contract, the CITY may then proceed with the work in any lawful manner that it may elect until it is finally completed. When the work is thus finally completed, the total cost of the same will be computed. All costs and charges incurred by the CITY in completing the Work will be deducted from any monies due or which may become due to the Principal. If the total costs of completion exceeds the sum which would have been payable under the Contract, then the Principal and the Surety(ies), in solido, shall be liable for and shall pay to the CITY the amount of such excess.

FOR REVIEW ONLY
NOT TO BE USED FOR BIDDING

In witness whereof we have signed this instrument as dated.

Principal/Contractor 1:

By: _____ Date: _____

_____
Printed Name and Title

(For Joint Venture) Principal/Contractor 2:

By: _____ Date: _____

_____
Printed Name and Title

Surety 1:	Surety 2:
By:	By:
Attorney-in-Fact	Attorney-in-Fact
Printed Name	Printed Name
Agency Name	Agency Name
Street Address	Street Address
City/State/Zip	City/State/Zip
(Seal)	(Seal)

FOR REVIEW ONLY
NOT TO BE USED FOR BIDDING

Subsequent correspondence/communication from CITY with respect to monthly progress reports and/or the contract bonds should be directed to:

For Surety 1:	For Surety 2:
Name	Name
Address	Address
City	City
State/Zip	State/Zip
Phone Number	Phone Number
Fax Number	Fax Number

FOR REVIEW ONLY
NOT TO BE USED FOR BIDDING

City of Johnson City ITS Phase I

Federal Project No. # IVHS-9447(402)
State Project No. # 90952-1642-54

TECHNICAL SPECIAL PROVISION (TSP) 725

Prepared For:

The City of Johnson City, TN

Prepared by: Gresham

Smith & Partners

GRESHAM
SMITH AND
PARTNERS

July 12, 2012

TABLE OF CONTENTS

SECTION 1: GENERAL REQUIREMENTS.....1-1 TO 1-19

SECTION 2: CONDUIT .....2-1 TO 2-9

SECTION 3: PULL BOXES .....3-1 TO 3-04

SECTION 4: FIBER OPTIC INFRASTRUCTURE.....4-1 TO 4-23

SECTION 5: RS-232/WIRE FSK MODEM.....5-1 TO 5-04

SECTION 6: EQUIPMENT CABINETS .....6-1 TO 6-11

SECTION 7: POLES AND STRUCTURES.....7-1 TO 7-05

SECTION 8: CCTV CAMERA SYSTEM.....8-1 TO 8-15

SECTION 9: NETWORK SWITCHES .....9-1 TO 9-08

SECTION 10: ELECTRICAL EQUIPMENT.....10-1 TO 10-05

SECTION 11: TERMINAL SERVERS.....11-1 TO 11-04

SECTION 12: WEATHER MONITORING SYSTEM .....12-1 TO 12-09

SECTION 13: TMC HARDWARE AND SOFTWARE……..……..……..…13-1 TO 13-16

SECTION 14: TRAFFIC CENTRAL MANAGEMENT SOFTWARE……....14-1 TO 14-41

SECTION 15: TMC VIDEO WALL EQUIPMENT……...……...15-1 TO 15-12

SECTION 16: LED MONITOR……..……....16-1 TO 16-05

SECTION 17: TMC CONSTRUCTION…….……17-1 TO 17-156

SECTION 18: PROJECT ACCEPTANCE…… ……...……....18-1 TO 18-05

SECTION 1
GENERAL REQUIREMENTS

All commands and references in, or in connection with, the text in this Technical Special Provisions (TSP) document are written to direct Contractor responsibility for action unless otherwise specified.

This section specifies the minimum general requirements for this Contract. These Section 1 General Requirements apply to all aspects of the Contract, including, but not limited to the materials, installation, measurement and payment requirements for all contract items.

The Contractor is responsible for all work required in this Section. All costs associated with the work in this Section shall be included in the contract price for the items included in the project and no separate payment shall be made.

Any reference to the number of days in the TSP should be considered Calendar days, unless otherwise specified.

The term "Engineer" or "City Engineer" is defined as the City of Johnson City Engineer overseeing the project or a designated Construction Manager (CEI) working for the City of Johnson City Engineer. These individuals shall be identified during the project's pre-construction meeting.

1.1 General Requirements

The Contractor shall be fully responsible for complete construction and testing of the City of Johnson City ITS Project as shown in the contract documents.

This project consists of the installation of:

1) The upgrade to the Traffic Management Center (TMC) located at the current city's Division of Traffic building 209 Water Street. The upgrade includes but is not limited to the following:
    A) Video Wall
    B) Upgrade of HVAC units
    C) Upgrade of electrical service
    D) Upgrade to current walls and doors
    E) Upgrade to furniture and TMC consoles
    F) Communications upgrade

See Section 17 of this TSP for further information on the upgrade to the TMC.

2) The installation and integration of new traffic management software
3) The installation of a video array wall for the Division of Street.

4) Fiber optic cable in underground existing conduit and pull boxes
5) Fiber optic cable in newly installed conduit and pull boxes
6) Aerial pole line installation of fiber optic cable using existing and new attachment hardware using applicable industry standards for pole line attachment
7) Cabinet entry through existing and new conduit paths
8) ITS devices to include:
    A) 12 Pavement sensors
    B) 2 Weather stations
    C) 43 CCTV camera systems
    D) 3 Stream gauges
    E) Associated Cabinets and Wiring
    F) Video and Network Devices

The Work shall consist of installation, configuration, and integration of an Ethernet communications system to transmit roadside data and video to the Traffic Management Center as a major part of the project. Modification of existing fiber optic infrastructure demarcation points and splice configurations is also required as shown on the plans.

The system includes, but is not limited to, the furnishing and installation of fiber optic cable network, electrical power service, a wide-area Ethernet communications network system and the required vendor software/hardware necessary to complete a fully functioning system.

All of the equipment provided shall comply with the applicable industry approved standards for the subsystems and communications network. Use of approved industry standards and the National Transportation Communications for ITS Protocols (NTCIP) shall be required for the CCTV devices.

1.1.1 TMC, ITS and Network Communications Devices

Quantitative and performance requirements for each type of equipment provided in this TSP are mandatory minimum requirements. Functional equivalents proposed by the Contractor that fully meets or exceed these Specifications will be considered, provided the functional equivalent is compatible with the communications, hardware, and software included in the project, and provided that the functional equivalent meets all design and operational objectives of the City of Johnson City. Experimental devices that are not proven in existing field installations at the time they are proposed for this project shall not be considered. All equipment and component parts that are furnished shall be new,

with warranty and not used or refurbished, shall meet all requirements of this TSP, and shall be in an operable condition at the time of delivery. All parts shall be of high quality workmanship and no part or attachment shall be applied contrary to the manufacturer's recommendations or standard practices. All materials and installation of all devices shall be in accordance with this TSP and Plans and with the manufacturer's recommendations for the exact intended application. The entire quantity of any particular item shall be the exact same manufacturer, model, revision, firmware, etc. In addition, each major component must be provided, integrated and warranted by a single vendor/manufacturer.

Manufacturers of ITS and Network Communications active electronic equipment and other critical system components shall be required to establish minimal qualifications prior to approval of equipment submittals, by submitting for consideration the following years of experience supplying the general type of device indicated:

1) TMC and Video wall: five (5) years
2) CCTV: five (5) years
3) Network Switches, Video Communications Equipment: three (3) years
4) Weather Stations: five (5) years
5) Stream gauges: Five (5) years
6) Roadway Sensors: five (5) years

The experience statements shall include but not be limited to three (3) owner references and documentation of operational equipment installations. The statement of experience shall identify the number of years experience as well as the references listed above and shall be provided during the submittal program.

1.1.2 Applicable Standards

All materials and installation procedures shall conform to the design Plans, Technical Special Provisions, and the supplemental Specifications, as included in the Specifications package. All electrical materials and work shall conform to the standards of the National Electrical Manufacturers Association (NEMA), the Underwriters' Laboratories Inc. (UL), the Electrical Testing Laboratories (ETL), the National Electrical Testing Association (NETA), Institute of Electrical and Electronics Engineers (IEEE) or the Electronic Industries Association (EIA), wherever applicable. In addition to the requirements of the approved shop drawings to be prepared by the Contractor, and these Technical Special Provisions, all materials and workmanship shall conform to the requirements of the National Electrical Code (NEC), National Electrical Safety Code (NESC) and applicable codes of governing jurisdictions. Unless specified, all standards used for this project shall be the latest edition available effective January 1, 2012.

1) Video Standards and Protocols

   A) The major system components to be furnished, installed and tested under this project is CCTV video equipment, which shall utilize interfaces and connections compatible with National Television Standards Committee (NTSC) standards. Digitization of the video signals for transmission shall utilize the H.264 standard, as defined by the Motion Picture Experts Group (MPEG), and as required by the device Specifications within this TSP. If necessary for proper operation of the encoding devices, the MPEG frame timing sequencing shall be properly tuned by the Contractor to eliminate video artifacts, and the L, P, and B frame settings for each digitized video stream shall be documented and provided to the Engineer as required by the submission requirements contained in this TSP.

2) NTCIP Standard Protocols.

   A) CCTV control protocol for pan, tilt and zoom in addition to other camera controls.

3) Ethernet and IP Standards and Protocols

   A) The Ethernet communications system and all connected devices shall, as an entire interconnected system, completely implement and be compatible with IEEE 802.3 industry standards for Ethernet and NTCIP standards supporting Ethernet as applicable and required. Ethernet switching equipment is used to transport the digital IP-based video and control data from field devices to hub cabinets. Routing equipment at the hub cabinets, routes the video and data to the end users as needed.

1.1.3 Device Control Protocols

For all active electronic devices controllable through any type of communications interface, the Contractor shall be required to voluntarily, and without seeking additional fees, restrictions, licenses or compensation from the City, divulge the entire interface protocol and/or management information base (MIB) to the City for each piece of equipment supplied.

1.1.4 Complete, Compatible Installations.

This TSP is for materials and equipment necessary to construct the proposed project, however, every fitting, minor detail, or feature may not be described. Any component not explicitly stated in this TSP, but necessary for the sites to function, shall be considered incidental and shall be furnished and installed at the sole discretion of the Engineer.

1.1.5 Complete Operational Systems

The Contractor shall furnish and install all necessary equipment for completely operational system that are of high quality, high reliability, and operational stability. Compliance with minimum requirements for individual items identified in this TSP does not, in and of itself, constitute compliance with the reliability and operational stability requirements necessary to provide for the integration of the equipment into a complete system. It is the Contractor's responsibility to ensure that the components provided will work together to form a complete working system as described in this TSP. It is the Contractor's responsibility to notify the Engineer of any components outlined in the Specifications or Plans that would prohibit the Contractor from being able to install a completed working system.

1.1.6 Communications System/Equipment Software Compatibility

The Contractor is responsible for ensuring that all equipment and software provided for this project is compatible with the communications system and all other equipment provided for this project, as installed, configured and programmed by the Contractor and while complying with all system functionality and performance requirements. This compatibility includes but is not limited to all software applications and control systems including but not limited to the weather stations, pavement and stream sensors, CCTV, network switches, video communications equipment, and the network management system. Any modifications to the vendor software, firmware, and hardware to account for system latency and compliance with the total video response delay performance requirements shall be the responsibility of the Contractor.

1.1.7 Equipment and Materials

1) All equipment and materials furnished and installed on this project shall be new and previously unused.

2) All equipment and materials of a similar type and nature shall of the same manufacturer, model, revision, firmware, etc.

3) All bolts, nuts, and fastening hardware less than five-eighths inch (5/8") diameter shall be stainless steel. All bolts, nuts and fastening hardware five-eighths inch (5/8") in diameter and greater shall be hot-dipped galvanized.

4) All components, materials, and incidentals shall be recommended by the manufacturer as suitable for the intended application, including any material exposed to the weather.

5) All equipment and associated materials shall be installed and configured in accordance with the manufacturers recommendations and standard practices.

6) When required by the Engineer, provide documentation and/or certification that all project requirements are being met relative to the application that the Contractor intends.

1.1.8 Coordination with various Construction Contractors in the Johnson City Area

The Contractor shall coordinate his activities with any other Contractors, which may be in the same work area. There are several areas within the project limits where roadway and intersection activities will be occurring during the same timeframe as this project. Conflicts will be handled at the discretion of the Engineer. The Contractor shall notify the City of Johnson City promptly in writing if there are any conflicts which may impact the Contractor's schedule or construction activities. The mere presence of these roadway construction activities alone will not be a sufficient reason for schedule delays. Contractor is expected to coordinate with these other Contractors to the extent possible. Field adjustments may be needed for the conduit and device locations shown throughout those construction areas.

1.2 Abbreviations and Acronyms

AASHTO - American Association of State Highway and Transportation Officials
ADA – Americans with Disabilities Act
AM – Amplitude Modulation
ANSI – American National Standards Institute
ASCE – American Society of Civil Engineers
ASCII – American Standard Code for Information Interchange
ASN.1 – Abstract Syntax Notation – 1
ASTM – American Society for Testing and Materials
ASSY – Assemblies
ATMS – Advanced Traffic Management System
AWG – American Wire Gauge
AWS – American Welding Association
BER – Bit Error Rate
BICSI – Building Industry Consulting Service International
BNC – Binary Network Connector
BSC – Bare Solid Copper
BSU – Base Station Unit
BTC – Bench Test Component
BTS – Bench Test System
C – Centigrade
CATV – Community Access Television
CCITT – International Telegraph and Telephone Consultative Committee, now referred to as ITU
CCTV – Closed-Circuit Television
CIF – Common Intermediate Format
CLD – Camera Lowering Device
CLI – Command Line Interface
COMM – Communications
CORBA – Common Object Request Broker Architecture Protocol
CRC – Cyclical Redundancy Check
D1- Refers to "full resolution"
DB – Decibel
DHCP – Dynamic Host Configuration Protocol
DMS – Dynamic Message Sign DSP
– Digital Signal Processing DVMRP
– Distance Vector Multicast Routing Protocol
EIA – Electronics Industries Association
EIRP – Effective Isotropic Radiated Power
EMI – Electromagnetic Interference
E.O.T.L. – Edge of Travel Lane
ETL – Electrical Testing Laboratories
F – Fahrenheit
FAT – Factory Acceptance Test
FCC – Federal Communications Commission
FHWA – Federal Highway Administration
FO – Fiber Optic

FOTP – Fiber Optic Test Procedures
Fps – Frames per Second
FSK – Frequency Shift Keying
FTP – File Transfer Protocol
GBIC – Gigabit Ethernet Interface Card
GB/S – Gigabits per Second
GFCI – Ground Fault Circuit Interrupter
GHz – Gigahertz
GIS – Geographic Information System
G.M. – Ground Mounted
GMRP – Generic Multicast Registration Protocol
GOP – Group of Pictures
GPS – Global Positioning System
G.R. – Guardrail
GVRP – Generic VLAN Registration Protocol
HAR – Highway Advisory Radio
HDPE – High Density Polyethylene
HSPG – Hub Single Point Ground
HVAC – Heating, Ventilation and Air Conditioning
IAB – Internet Activities Board
IANA – Internet Assigned Numbers Authority
ICC – Intelligent Cruise Control
ICEA – Insulated Cable Engineers Association
IEC – International Electrotechnical Commission
IEEE – Institute of Electrical and Electronic Engineers
IETF – Internet Engineering Task Force
IGMP – Internet Group Multicast Protocol
IMSA – International Municipal Signal Association
IP – Internet Protocol
ISO – International Organization for Standardization
ITE – Institute of Transportation Engineers
ITS – Intelligent Transportation Systems
ITSA – Intelligent Transportation Society of America
ITU – International Telecommunications Union
JPL – Jet Propulsion Laboratories
KAIC – one thousand amps interrupting current
Kbps – Kilobits per second
KHz - Kilohertz
km – Kilometer
LAN – Local Area Network
LCD – Liquid Crystal Display
LED – Light Emitting Diode
LF – Linear Feet
LHCP – Left hand circular polarization
LT – Left
Mbps – Megabits per Second
MGB – Main Ground Busbar
MHz – Megahertz
MIB – Management Information Base
MM – Multimode Fiber
MPEG – Motion Picture Experts Group
METRO – Metro Public Works
MSEC – Millisecond
MTBF – Mean Time Between failure
MUTCD – Manual on Uniform Traffic Control Devices
NAB – National Association of Broadcasters
NEC – National Electric Code
NEMA – National Electrical Manufacturers Association
NESC – National Electrical Safety Code
NETA – National Electrical Testing Association
NHI – National Highway Institute
NIST – National Institute of Standards and Technology
NHTSA – National Highway Traffic Safety Administration
NMS – Network Management System
NOAA – National Oceanic and Atmospheric Administration
NSF – National Science Foundation
NTCIP – National Transportation Communications for ITS Protocol
N.T.S – Not to Scale
NTSB – National Transportation Safety Board
NTSC – National Television System Committee
NWS – National Weather Service
O.H. – Overhead
OSP – Outside Plant
OTDR – Optical Time Domain Reflectometer
OVDS – Overheight Vehicle Detection System
P – Power
PB – Pull Box
PC – Intel/Windows-based personal computer
PCB – Printed Circuit Board
PE – Polyethylene
PIT – Pre-Installation test
POCSAG – Post Office Code Standardization Advisory Group
PPM – Parts per Million
PPT – Puncture Propagation Tear
PM – Preventive Maintenance

PSI – Pounds per Square Inch
PTZ – Pan Tilt and Zoom
PV - Photovoltaic
PVC – Polyvinylchloride
RADIUS – Remote Authentic Dial-in User Server/Service
RDS – Radar Detection System
RF – Radio Frequency
RFI – Radio Frequency Interference
RGS – Rigid Galvanized Steel
RMON – Remote Networking Monitoring
ROW – Right-of-Way
RSL – Received Signal Level
RUS – Rural Utilities Service
RT - Right
SAE – Society of Automotive Engineers
SAP – Session Announcement Protocol
SAT – Stand Alone Site Test
SCH. – Schedule
SCTE – Society of Cable Telecommunication Engineers
SCU – Sign Controller Unit
SDP – Session description protocol
SDR – Standard Dimension Ratio
SIA – Security Industry Alliance
SIF – Standard Interchange Format
SM – Single Mode
SNMP – Simple Network Management Protocol
SST – Sub-system Test
STA. – Station
STMF – Simple Transportation Management Framework
STMP – Simple Transportation Management Protocol
STP – Shielded twisted pair
SU – Subscriber Unit
TACACS – Termination Access Controller Access Control System
TCIP – Transit Communications Interface Protocol
TCP – Transmission Control Protocol
TCP/IP – Transmission Control Protocol / Internet Protocol
TDMA – Time Division Multiple Access
TDOT – Tennessee Department of Transportation
TEES – Transportation Electrical Equipment Specifications
TFTP – Trivial File Transfer Protocol
THHN – Thermoplastic High Heat Resistant Nylon Coated
THWN – Thermoplastic Heat and Water Resistant Nylon Coated
TIA – Telecommunications Industry Association
TIS – Traveler Information Service
TMC – Transportation Management Center
TSP – Technical Special Provisions
TVSS – Transient Voltage Surge Suppressor
UDP – User Datagram Protocol
UDP/IP – User Datagram Protocol/Internet Protocol
UL – Underwriter's Laboratory Incorporated
UNII – Unlicensed National Information Infrastructure
UPS – Uninterruptible Power Supply
UTP – Unshielded Twisted Pair
UV – Ultraviolet
VAC – Volts Alternating Current
VDC – Volts Direct Current VDS – Video Detection System VLAN – Virtual Local Area Network
VSWR – Voltage Standing Wave Radio

1.3 Design Summary

In general, the City of Johnson City ITS phase I design concept is to upgrade the existing TMC located at the Division of Traffic building and to install a City owned fiber network connecting existing signal equipment and to deploy new ITS devices throughout the project limits. The TMC will include the upgrade to the current TMC layout, HVAC system, electrical system, furniture and furnishings, the installation fo a video wall and communication racks and integration. The ITS field equipment will include CCTV, Weather Station, Stream gauges, roadway sensors, and a fiber optic cable infrastructure supporting an Ethernet network. Most of the CCTV installations will be placed on existing traffic signal poles or existing structures as shown in the Plans and will be connected to a nearby traffic signal cabinet. The roadway sensors will be installed near traffic signal cabinets with the Data loggers installed in the existing

traffic signal cabinets. The Weather station and Stream gauges cabinets will be stand alone and connect to the fiber optic cable infrastructure with drop cables.

The Ethernet system installed throughout the project limits will communicate over the dedicated, City-owned fiber optic cable network constructed as part of this project. All new fiber will be single-mode and will be installed as detailed on the plans. For any given segment of roadway, a 48- fiber trunk cable will serve as the network backbone for the field devices. Sections of existing fiber cable will be used as shown in the plans. It will be the Contractors responsibility to verify the integrity of the existing fiber optic cable and conduit system that is to be utilized on the project. The existing fiber on this project is a combination of multimode and singlemode fiber trunk. Existing fiber will be reconfigured to accommodate the system upgrade to an IP system. The existing fiber is currently in use by the traffic control system, on multimode fiber, and other city agencies on the singlemode fiber tubes. It is the Contractor's responsibility to coordinate down time of the existing fiber with the City, so that downtime is minimized to 48 hours and during non-business hours only for any one specific construction activity.

Use only single mode fibers as shown in the plans. A 12-fiber pre-terminated drop cable will be used from splice closures to the individual field devices. All communications across the new fiber network shall be Ethernet.

1.3.1 Coordination

The Contractor shall coordinated construction closely with the City. A detailed schedule will be required showing the location of construction and cable installation and shall be updated weekly. This requirement is not intended to limit when or where the contractor may work within the project limits. For example, the contractor may install conduit, cable, etc. at anytime within the limits of the project if communications with the existing devices is not disrupted. When functionality of the existing system is disrupted notification and approval by the city is required. The intent of the coordination process is to allow The City of Johnson City to continue to use the existing devices for the longest period. It is understood that downtime will be necessary but coordination is required to limit the duration.

1.3.2 Electrical Power

For new devices, power service drops shall be provide at each proposed demarcation points, as appropriate. The Contractor shall include the initial install cost from the utility as well as the cost of coordinating with the utilities in the bid price for Electrical Connections. The Contractor is required to coordinate with the utility companies for the installation of the service and all necessary permits and fees. All applicable fees for installation, inspection and permitting shall be paid by the contractor, and included in the cost of the electrical service. Any physical facilities, such as conduit runs, needed by the service provider shall be the responsibility of the Contractor to install as shown

in Plans. The electrical demarcation points within the existing device project limits will remain in place.

1.3.3 Phasing

The contractor shall work with the City to develop and submit and phasing program that will minimize system down time. As a minimum requirement the Traffic Management Center must be completed and operational before and fiber is cut over in the field.

The intent of the phasing will be to allow the City to continue to use the existing devices while the new system is being installed. The TMC and All infrastructure elements shall be completed prior to the existing devices cutover, such that the actual cutover process to the new fiber network involves only the relocation/replacement of jumper cables in the existing cabinets

1.4 General System Requirements

1.4.1 CCTV and Control Data Latency

Control commands will be generated from the vendor provided video control software , and shall pass through the Ethernet network to the field equipment cabinet, where a video encoder and CCTV shall be located. Operation of the pan, tilt, zoom, presets, focus, iris and any other available functions of the CCTV cameras shall be provided. Status data generated by the camera shall be transmitted to the camera control unit. The total video response delay between the operator issuing a command to move a camera (through a mouse, keyboard, or joystick through the vendor supplied Software ,), and the resulting display on the operator's monitor of that camera's viewing image as it is moving, shall be minimized to avoid over steering and operator difficulty in positioning the camera. The maximum allowable total video response delay anywhere in the project shall not exceed an average of one (1.0) second for any ten cameras sequentially randomly sampled, and shall not exceed one and one half (1.5) seconds for any one camera sampled.

1.4.2 Existing System

The existing system consists of approximately 73 traffic signals with both Pole mounted and Base mounted controller cabinets. The project includes existing single and multi mode fiber optic infrastructure on several arterials and the main connection to the TMC. Details on the location of the existing cable and devices are included in the Plans. There are many fiber optic circuits that are in use by other departments and agencies on the existing system. It shall be the Contractor's responsibility to collect which existing fibers are in use, and schedule the circuit down time with the appropriate agency, as specified in this TSP and in the plans. If any additional information regarding the existing system

is needed for bidding purposes, it is the Contractor's responsibility to request in writing the specific information desired in accordance with the question submittal deadlines in the bid instructions.

1.5 Project Testing Program Requirements

The Contractor shall conduct a Testing Program as required below in addition to all other project testing and acceptance procedures required elsewhere in this TSP and Plans. All costs associated with the Project Testing Program shall be included in overall contract prices no separate payment will be made for any testing.

1.5.1 General Requirements

The Contractor is responsible for planning, coordinating, conducting and documenting all aspects of the Testing Program. The Engineer is responsible only for attending and observing each test, and reviewing and approving the documentation of the Contractor's test results.

The contractor is responsible for submitting test procedures for all tests for approval by the Engineer before testing. All tests will be performed to demonstrate successful integration with existing traffic signal controllers, Proposed CCTVs, weather stations, stream gauges and street sensors and video detection equipment.

The Contractor shall provide all ancillary equipment and materials as required in the approved test procedures.

All test results shall be documented in writing by the Contractor in accordance with the test procedure and submitted to the Engineer within seven (7) days of the test. Any given test session is considered incomplete until the Engineer has approved the documentation for that test session.

All test results deemed by the Engineer to be unsatisfactorily completed shall be repeated by the Contractor, following all test requirements as given here. In the written request for each test occurrence that is a repeat of a previous test, the Contractor shall summarize the diagnosis and correction of each aspect of the previous test that was deemed unsatisfactory. Any revisions to the test procedures for a repeated test occurrence shall meet all requirements for the original test procedures, including review and approval by the Engineer.

The satisfactory completion of any test shall not relieve the Contractor of his responsibility to provide a completely acceptable and operating system that meets all requirements of this project.

Several sections of this TSP contain a requirement for a bench test of components (BTC) and limited network simulations. These tests shall be conducted and documented as outlined in this section.

1.5.1.1 Bench Testing and Other Test Requirements

It is the Contractor's responsibility to fully test all equipment prior to installation. Provide equipment bench and/or pre-installation test results or documents to the Engineer as proof of testing the equipment prior to installation.

1.5.2 Conditional System Acceptance Test

The Contractor shall perform a complete conditional system acceptance test on all equipment and materials in the project. Prior to a Conditional System Acceptance Test, the Contractor shall provide advance notice and written test results documentation that the Contractor has performed a dry-run of the conditional system acceptance test, and the Engineer reserves the right to require attendance of a dry-run test session.

The Conditional System Acceptance Test shall demonstrate that all equipment and materials in the network are in full compliance with all project requirements and fully functional as installed and in final configuration, communicating with and being controlled through to the communication hubs and the TMC with the supplied software.

The Engineer reserves the right to require, at no additional expense to the City, the attendance of a qualified technical representative of the equipment and/or software manufacturers to attend any given Conditional System Acceptance Test.

1.5.3 Final Inspection

Upon successful completion of the conditional acceptance test and a two week burn in period demonstrating all equipment functions as intended at length, the entire project shall be eligible for Final Inspection. The Final Inspection will be conducted provided the conditional acceptance test has demonstrated the entire system is operating successfully. Up to fourteen (14) days shall be allowed for the Engineer to conduct a Final Inspection. The Final Inspection shall include but is not limited to:

1) Monitoring of all system functions at the TMC to demonstrate the overall system is operational.
2) A field visit to each site to ensure all field components are in their correct final configuration.
3) Verification that all final cleanup requirements have been completed.
4) Approval of final as-built documentation.

Prior to conducting the Final Inspection, the conditional acceptance test shall demonstrate that all requirements defined in this TSP, including, but not limited to, functional/system performance requirements, data transmission/communication requirements, safety/password requirements, and interface requirements with other components of the system.

A project punch list will be developed while conducting the final inspection. The contractor shall address the items on the punch list and shall submit the complete punch list to the Engineer for inspection.

The Engineer reserves the right to require, at no additional expense to the City the attendance of a qualified technical representative of the equipment and/or software manufacturer to attend a portion of a Final Inspection.

1.5.4 Final System Acceptance

Upon successful completion of the Final Inspection and punch list requirements, the Engineer will grant Final System Acceptance.

1.6 Training

Prior to Conditional System Acceptance, the Contractor shall provide two (2) identical non-consecutive four (4) hour training sessions for each subsystem including the CCTV system and software. The Contractor shall provide eight (8) hours of training on the maintenance requirement of the weather station, sensors and stream gauge field equipment. An additional four (4) hours of training on the weather station system software shall be provided. The Traffic Central Management System training shall be as outlined in that section of the TSP. An additional one (1) day session shall be conducted to describe the configuration and operation of all electronic equipment including network switches, video communications equipment, communications hubs and associated equipment, electrical services, and fiber optic cable network.

The training shall be provided for at least six (6) personnel with individual copies of all training materials and manuals provided to each participant. The training must include a complete demonstration of the configuration, operation and capabilities of each component in the system. The training should also consist of a hands-on demonstration of all software configuration and functionality, where applicable.

Each training day shall include a mixture of classroom style training in equipment operation, hands-on operator training, and question and answer sessions. The Contractor shall submit the trainers' qualifications to the Engineer for approval prior to scheduling the training. The qualifications of the trainers must meet, at a minimum, the recommended qualifications of the equipment manufacturer. If qualified personnel are not on the Contractor's staff, a representative of the manufacturer shall provide the training.

The Contractor shall submit to the Engineer for approval a detailed Training Plan including course agendas, detailed description of functions to be demonstrated and a schedule.

1.7Warranties

The Contractor shall be fully responsible for all labor, shipping, insurance and other charges of the system until Final System Acceptance. Upon Final System Acceptance, each component of the Project shall be warranted against manufacturing defects and workmanship for a period of at least one (1) year from the date of Final Acceptance. These warranties shall cover complete replacement, at no charge, for the faulty

equipment, including any labor and equipment needed for the repair. Equipment covered by the manufacturers' warranties shall have the registration of that component placed in the City of Johnson City's name prior to Final Inspection. Even though the warranties will be in the City's name, the Contractor is responsible for ensuring that the vendors or manufacturers supplying the components and providing the equipment warranties recognize the City as the original purchaser and owner/end user of the components from new.

1.8 Project Submittal Program Requirements

The Contractor shall develop and conduct a submittal management program that shall meet the following minimum requirements, supplemented by any additional requirements regarding submittals that may appear in subsequent sections of this TSP or any other contract documents. All materials used on this project will require a submittal and approval prior to purchase and use regardless of whether or not they are called out specifically in this TSP.

With each submittal package, the Contractor shall complete a Submittal Summary Form and a Project Submittal Compliance Form. The compliance form will list each TSP subsection and will require the contractor to verify and check that it meets that subsection of the Specification. The Engineer shall provide at contract NTP blank copies of the Submittal Summary Form and the contract item specific compliance form. Submittal packages without these completed forms will be considered unallowable and returned to the Contractor without review or consideration.

The Submittal Summary Form will include but is not limited to the following data:

- Contract pay item number
- Submittal package identification
- Submittal description with make/model/part number information
- Authorized contractor signature

The Project Submittal Compliance Form will include but is not limited to the following data:

- Reference to TSP requirement
- Compliance or non-compliance statement for each TSP requirement
- Cross-reference to attached documentation for each TSP requirements
- Authorized contractor signature

The Contractor shall at minimum provide the following submittals for review and approval by the Engineer. All submittals must be submitted in hard copy. The required number of hardcopy submittals is indicated in the table below. The table

below is meant as a guide and is not all-inclusive. Items not listed below may also be required during the submittal stage.

Item	Catalog Cut sheets and technical specifications	Test Procedure	Installation Procedures	Maintenance Manuals	Operational Manuals	Manufacturer's Statement of Experience	Final Documentation	Interface Protocols
CCTV Equipment	X	X	X	X	X	X	X	X
Communications Hubs		X					X	
Video Encoder/Decoder (as applicable)	X	X	X	X	X	X	X	X
Roadway Sensor System	X	X	X	X	X	X	X	X
Cabinets	X	X	X	X	X		X	
Network Switches Type A, B	X	X	X	X	X	X	X	X
Terminal Server	X	X	X	X	X	X	X	X
All Software	X	X	X	X	X		X	
Weather Station (All Types)	X	X	X	X	X	X	X	
TMC Hardware	X	X	X	X	X		X	
Video Wall	X	X	X	X	X	X	X	
Training Plan							X	
Conduit and Pull Boxes	X	X	X					
Fiber Optic Infrastructure	X	X	X	X	X		X	
Traffic Maintenance Phasing Plan	X							
TMC System Design Report							X	
Number of Copies	3	3	3	3	3	3	3	

1.8.1 Thirdly (30) Day Submittals:

Within 30 calendar days of notice to proceed, the Contractor shall submit a written description of his proposed submittal program, including a comprehensive list of all intended submittals and schedule of the submittals for the remainder of the project. The Contractor shall develop an appropriate schedule based on the schedule of work, with the exception of the items identified below that have specific due dates. At a

minimum, the submittals listed in the table above shall be included in the submittal program. Note that the 30 day submittal is ONLY a schedule of the submittal program. The 30 day submittal does not include any actual equipment submittals.

The Contractor shall submit to the Engineer for approval 3 (three) copies of the program including a complete list and initial schedule of all of those materials, components and structures to be incorporated in the work for which submittals are required. This list shall form the basis for a log of submittals that will be used by the Contractor and Engineer to manage the submittal process. The list shall be submitted as an Excel spread sheet. In addition, the 30 day submittal shall also contain a letter from the Contractor certifying that all required interface protocols will be submitted from all vendors as requested.

1.8.2 Sixty (60) Day Submittals:

Within 60 Calendar Days of Notice to Proceed the Contractor shall submit the following:

a. Catalog Cutsheets and Technical Specifications: Within 60 Days of Notice to Proceed, the Contractor shall submit to the Engineer for approval equipment catalog cut sheets and technical specifications for all items listed in the above table and any related items. The catalog cut sheets and technical specifications shall include all necessary information to clearly demonstrate that the proposed equipment meets the requirements of this TSP and the Plans. In addition, the equipment cut sheets shall include manufacturer's name, model number, and any other descriptive data as necessary to clearly evaluate the item. Interface Protocols for all devices and equipment should also be submitted. All materials included within a specific Section of this TSP shall be submitted at the same time as a submittal package.

   Specific submittal requirements contained herein shall be supplemented by any requirements shown in the various Special Provisions such as the Traffic Maintenance Plans and Project Schedules as described in Special Provision 105H. Materials shall not be ordered or released for fabrication without the approval of submittals by the Engineer.

   The review and approval of submittals by the Engineer is based on the information provided in the submittal and the conformance with the design concept of the project. Submittal reviews do not relieve the contractor of the responsibility for making the overall system conform to the requirements of the contract. Approvals at the submittal stage are always conditional upon demonstration that the equipment is fully compliant with the Contract including compatibility with all other equipment in the system.

1.8.2 Ninety (90) Day Submittals:

Within 90 Calendar Days of Notice to Proceed the Contractor shall submit the following:

a. Shop Drawings and Design Calculations: Within 90 days of notice to proceed the Contractor shall submit to the Engineer shop drawings and design calculations for all structural elements and attachments including; but not limited to, support poles, structure attachments and foundations.

1.8.3 Other Submittal Timeframes

1. Test Procedures: A minimum of 60 days prior to each desired test date, the Contractor shall submit to the Engineer all test procedures for approval by the Engineer. The test procedure submittal shall include all of the test forms for each of the required tests as required in this Technical Special Provision. The actual test cannot be scheduled until the test procedures are approved.

2. Operational Manuals: A minimum of 90 days after the notice to proceed, the Contractor shall submit to the Engineer Operational Manuals for approval by the Engineer. The Operational Manual submittal shall include step by step directions for the operators to execute all of the functions as required in this Technical Special Provision. The Operational Manuals shall be functionally organized, and identify available (built-in) options to operational characteristics. The Engineer reserves the right to request operational manuals during the cutsheet submittal stage if the Engineer deems it necessary to adequately check the operational characteristics of the equipment. Operational manuals shall be provided in hard copy and on CD ROM.

3. Maintenance Manuals: A minimum of 60 days prior to Conditional Acceptance, the Contractor shall submit to Engineer Maintenance Manuals for approval by the Engineer. The Maintenance Manual submittal shall include all of the necessary steps to maintain the equipment in good working condition, and as indicated by the manufacturer to maintain the warranty. The Engineer reserves the right to request maintenance manuals during the cut sheet submittal stage if the Engineer deems it necessary to adequately check the required features of the equipment. Maintenance manuals shall be provided in hard copy and on CD ROM.

4. Final Documentation: Prior to the start of the Burn In Period, the Contractor shall submit 5 copies of final documentation for review and approval by the Engineer. Burn In Period will not start until final documentation is approved by the Engineer. In addition to any specific final documentation requirements outlined in the individual Sections of this TSP, final documentation shall include a single binder containing all of the equipment warranties and other manufacturer produced documentation. In addition final documentation shall include an inventory list of all of the furnished and installed equipment. This list shall include equipment description, manufacture's part number, model number, serial number, and warranty start and end date. The final

documentation shall also include a troubleshooting matrix which can be utilized by the system operators to determine the most appropriate action for various problems that may occur in the system.

1.8.4 Review Process:

1. The Engineer will review and return submittals to the Contractor within 21 days of receipt.
2. If additional information is requested or if a re-submittal is required, the Contractor is required to re-submit within 21 days of receipt of the Engineers comments.
3. The Engineer will review and return the re-submittals to the Contractor within 21 days of receipt.
4. Any additional re-submittals must also meet this 21 day timeline.
5. The Contractor shall maintain a file of approved submittals, shop drawings and operating data for reference purposes and shall provide five complete copies of that file to the Engineer upon completion of construction.

1.9 System Documentation

The Contractor shall maintain a formal procedure to document the configuration of the as-built system as described in Section 18.2.6 of this TSP. That program will include maintenance of record drawings and other documentation of the actual location and arrangement of all hardware installed on the project. In addition, the program will include maintenance of records of the system integration procedures. Provisions will be made to accommodate changes to the system both during and after construction.

1.10

Payment Terms for 725 Item Numbers

Stored Materials Payment will be made for all 725 Item Numbers per TDOT Standard Specifications. For 725 items that describe payment terms based on completing certain testing or installation requirements, those payment terms will apply only to the unit price amount that is in excess of the stored materials payment. For example, if an item says that 50% of the contract unit price will be paid upon approval of Conditional Acceptance, this payment will only be applicable if the stored materials payment was not already in excess of 50% of contract unit price. At the point which the percentage associated with a testing requirement exceeds the amount previously paid for stored materials, the additional amount will be paid to the contractor at the time of that particular test completion.

SECTION 2
CONDUIT

2.1 Description

This section specifies the minimum requirements for conduit furnished and installed on this project as shown on the Plans or as directed by the Engineer.

2.2 Materials

The Conduit shall meet the following material requirements:

2.2.1 General Requirements

1) All continuous flexible conduit products shall meet the requirements specified herein.
2) All continuous flexible conduit shall have been manufactured and labeled no earlier than in the sixth calendar month preceding the City of Johnson City's award date of the contract.

2.2.2 Continuous Flexible Conduit (Conduit Duct Bank)

1) Continuous Flexible Conduit shall be manufactured from virgin high-density polyethylene (HDPE) resin compound with a minimum cell classification of PE 345434C for PE 3408 materials in accordance with ASTM D-3350.
    A) Physical and Mechanical Properties and Test Methods
        i) Tensile Strength @ yield - 3,000 PSI min. ASTM D-638
        ii) Density – 0.941 g/cc min. ASTM D-4883/1505
2) Conduit shall be extruded from colored material for uniform full-thickness coloring.
3) All continuous flexible conduit shall be labeled with durable identification giving the name of the manufacturer, conduit size (inner diameter trade size and wall thickness/rating), manufacturer/date codes, the legend, "City of Johnson City" and sequential foot marking. Labeling shall occur a maximum of every two feet (2').
4) Conduit to be used in bends and sweeps shall have a minimum burn through time of thirty (30) minutes when tested in accordance with Generic Requirement GR-356-CORE, Issue 1, October 1995.
5) The conduit manufacturer shall have a documented Quality Control/Assurance System.

6) All conduit used on this project shall conform to the color scheme and use described below:
    A) Orange (Trunk Fiber)
    B) Blue (Drop Fiber)
    C) White (Spare)
    D) Grey (Electrical wire)
7) Two inch (2") conduit shall conform to ASTM D-3035 and meet the following requirements:
    A) Smoothwall SDR 11
    B) Nominal outer diameter: 2.375 in.
    C) Minimum inner diameter: 1.885 in.
    D) Minimum wall thickness: 0.216 in.
8) Coupling
    A) Make every effort to minimize coupling. Couplings are permitted only with the Engineer's prior approval.
    B) Couplings shall be airtight and watertight. All couplings shall be installed in accordance with the conduit and the coupling manufacturer's recommendations. Only couplings of the type specified below and approved by the conduit manufacturer are permitted.
    C) Couplings shall be accomplished only by hydraulic press-on or electro-fusion coupling methods.
        i) Use hydraulic press-on couplings of seamless tool-grade tubular aluminum with sealing ring barbs and center stop.
        ii) Use hydraulic compression duct coupling tools and follow all manufacturer's installation procedures, fully inserting both conduit sections to the coupling center stop.
        iii) Use pre-fabricated electro-fusion couplings that are field-installed using the coupling manufacturer's recommended automatic self-monitoring fusing machine and installation procedures.
        iv) Do not use any other coupling methods.

2.2.3 Rigid Galvanized Steel (RGS) Conduit

1) Shall meet TDOT Standard Specifications for Road and Bridge Construction.

2.2.4 Marking Tape

The Marking Tape shall meet the following requirements:

1) The color of the tape shall be orange with "JOHNSON CITY FIBER OPTIC CABLE" printed no more than every six and one half feet (6.5').
2) The tape shall be a dielectric, polyolefin film tape, 0.004 in. thick and 3 in. wide. The tape shall be constructed using material and ink colors which will not change when exposed to acids and other destructive substances commonly found in the soil.
3) Physical and Mechanical Properties and Test Methods

A)	Standard Weight - 0.02 lb/ft^2	ASTM-D2103
B)	Thickness-Overall - 0.004 in.	ASTM-D2103
C)	3" Tensile Break-MD - 35 lbf	ASTM-D882
D)	3" Tensile Strength-MD - 2900 PSI	ASTM-D882
E)	3" Tensile Break-TD - 38 lbf	ASTM-D882
F)	3" Tensile Strength-TD - 3160 PSI	ASTM-D882
G)	Elongation-MD - 530%	ASTM-D882
H)	Elongation-TD - 660%	ASTM-D822
I)	PPT Resistance-MD - 12 lbf	ASTM-D2582
J)	PPT Resistance-TD - 14 lbf	ASTM-D2582
K)	Tear Strength-3" x 8"-MD - 24 lbf	ASTM-D2261
L)	Tear Strength-3" x 8"-TD - 32 lbf	ASTM-D2261

PPT – Puncture Propagation Tear

MD/TD – Machine Direction/ Transverse Direction

2.2.5 Conduit Detection Wire

The conduit detection wire shall meet the following requirements:

1) Conduit detection wire shall be #10 AWG stranded copper orange-insulated THHN-THWN conductor.

2.2.6 Pull Tape

The pull tape for cable installation shall meet the following requirements:

1) 1250 lb tensile strength
2) Flat, not round, construction
3) Printed sequential foot markings

4) Pre-lubricated for reduced pulling tension at start of cable pull
5) Low susceptibility to absorption of moisture; moisture resistant

2.2.7 Duct Plugs

Duct plugs shall meet the following requirements:

1) Duct plugs intended for underground telecommunications infrastructure shall be installed on conduits.
2) Duct plugs shall be sized to fit the conduits and cables with which they are used.
3) Duct plugs shall provide watertight and airtight gasketed seals by use of mechanical expansion of the duct plug body and gasket. No sealants or caulks shall be used.
4) All metallic components of duct plugs shall be stainless steel.
5) Blank duct plugs are used to seal spare conduits and shall have inner rings to which pull tape can be tied.
6) Cable duct plugs are used to seal conduits that contain a cable. The plug shall be sized to fit the conduit and cable with which it is used and shall be a split plug with a bushing assembly for sealing around the cable by mechanical compression.

2.3 Installation Requirements

2.3.1 General Requirements

1) All material installed shall follow the guidelines in the following sections.
2) Use blank duct plugs to seal the ends of all conduit immediately upon conduit placement. This includes, but is not limited to, intermediate/incomplete sections of conduit prior to conduit splicing or termination in pull boxes and empty conduits in pull boxes prior to cable installation.
3) Conduit shall be installed in a straight line horizontal path between pull boxes except where shown otherwise in the Plans.

2.3.2 Continuous Flexible Conduit

1) Install Conduit Duct Banks by configuring individual continuous flexible conduits into a continuous duct bank from termination point to termination point as shown in the Standard Details and other Contract Documents.
2) Continuous flexible conduit installation in earth shall be trenched, horizontal directional bored or drilled, or plowed at the Contractor's discretion, unless otherwise noted on the Plans, at a minimum depth of thirty (30) inches from the top of the conduit.

3) All continuous flexible conduit located under the paved roadway in the plan sheets shall meet the following requirements. The conduit shall be placed at a minimum depth of thirty (30) inches below subgrade Backfill shall meet City Standards for a paved roadway. All areas shall be completely restored daily according to the time frames set under the approved Traffic Control Plan.
4) All conduits underneath railroad tracks shall abide by the details of the railroad permit.
5) All conduits to be installed under streams shall be horizontal directional bored or drilled. No open trenching through an area deemed to be a current or wet weather stream will be allowed. All conduit bored under streams shall be a minimum depth of five feet (5') below the stream bed.
6) Bore Logs will be required for each bore location.
7) The Contractor shall submit a proposed bore log format to the Engineer for review and approval.
8) If a drainage or utility conflict arises, the Contractor shall submit a plan for resolving the conflict to the Engineer for review and approval.
9) Make every effort to minimize coupling. Couplings are permitted only with the Engineer's prior approval.
10) Conduit shall be placed in the straightest orientation possible, reducing bends, twists, rises, and waves. Conduits shall be held in place during backfilling when necessary to keep straight and at the proper depth. Where field conditions require the trench to change direction and bends are necessary, the bends shall be formed in the trench and should be smooth and even and shall not have less than a four foot (4') radius (as measured to the inside surface of the conduit).
11) Test every conduit after the conduit is installed and before cable or pull tape is installed. Perform testing on all conduit types in this TSP, including but not limited to each cell of multi-cell conduits, each conduit in duct banks, and each conduit. All testing shall be performed using the procedures and mandrel size recommended by the conduit manufacturer. Testing shall be performed in the presence of the Engineer. Payment for all testing is included in the cost of the conduit.

2.3.3 Rigid Galvanized Steel Conduit

1) Exposed conduit runs shall be two inch (2") rigid galvanized steel unless otherwise required by the Plans.
2) All conduit runs on structures and poles shall be properly terminated into the respective device, or a duct seal shall be installed so as to seal the conduit from moisture, insects, rodents and other foreign material. The costs of the galvanized steel conduit, and all associated fittings shall be included in the cost other items.

3) Bushings shall be installed in conduit at all exposed conduit terminations for protection of the conductors.

2.3.4 Marking Tape

1) As shown in the Plans Typical Details, install marking tape above all underground conduit installed by trenching or plowing.
2) Marking tape shall be installed in continuous manufactured lengths. No splicing or overlap is permitted.
3) Install a minimum of four feet (4') of marking tape into pull boxes where trenched conduit is terminating. Marking tape shall enter under the lower edge of the pull box.
4) Marking tape is not required when conduit is bored or plowed.

2.3.5 Conduit Detection Wire

1) Install one (1) conduit detection wire with all conduits directly below or at the same level as the conduit. Conduit detection wire is required with all conduits installed by any installation method, including trenching, directional boring, or plowing.
2) Only one (1) conduit detection wire is required per installed conduit segment regardless of the number of conduits installed in that segment.
3) Conduit detection wire shall be installed outside of the conduit, except when boring then the detection wire shall be placed in a spare conduit.
4) Conduit detection wire is not required for structure mounted conduit, except where underground segments of structure mounted conduit are greater than twenty feet (20') in length.
5) Conduit detection wire is not required for conduit segments between pull boxes and pole/sign structure foundations, except where conduit segments are greater than twenty feet (20') in length.
6) The conduit detection wire shall be continuous and unspliced between pull boxes and shall enter the pull boxes at the same location as the conduit with which it is installed, entering under the lower edge of the pull box.
7) Coil and secure four feet (4') of conduit detection wire in each pull box or vault.
8) Testing
    A) Perform a continuity or tone test after installation to confirm that a continuous run of conduit detection wire was installed between pull boxes or vaults.
    B) Prepare a test plan, supplying equipment, conducting the test and documenting the results. Submit a test plan at least fifteen (15)

working days prior to the desired testing date. Testing shall not begin until the Engineer has approved the test plan, and all tests shall be conducted in the presence of the Engineer.

2.3.6 Pull Tape

1) Install pull tape into each empty conduit and empty cell within a multi-cell conduit.
2) Install the pull tape after conduit testing has been completed.
3) Install and secure five feet (5') of slacked pull tape in each empty conduit or cell at each pull box.
4) Secure the pull tape by tying it to the blank duct plug for the conduit in which it is installed.

2.3.7 Duct Plugs

1) Install blank duct plugs in each empty conduit that enters a pull box, ground-mounted cabinet, pole foundation, hub, or building entrance.
2) Install cable duct plugs in each conduit containing fiber optic or CCTVcable that enters a pull box, ground-mounted cabinet, hub, or building entrance.
3) Do not install cable duct plugs on conduits containing power service conductors.

2.3.8 Spare Conduits in Foundations

1) A minimum of one two inch (2") spare conduit shall be installed in all pole foundations and a minimum of two (2) two inch (2") conduits shall be installed in the base of all ground mounted cabinets.
2) Spare conduits shall be sealed with blank duct plugs.

2.4 Measurement

2.4.1 General Requirements

1) All conduit material shall be measured following the guidelines in the following sections.
2) All conduit types shall be measured in linear feet per type to the nearest foot. All conduit types shall be measured along the conduit by the following:
   a) From center of pull box to center of pull box.
   b) No additional measurement will be made for vertical conduit inside the pull box or structure.

c) No additional measurement will be made for conduit between a pull box and the nearby (less than 10') pole or structure.

2.4.2 Continuous Flexible Conduit

1) Unless otherwise specified in the Plans, all costs for materials, installing, restoration, marking tape, pull tape, duct plugs, fittings, conduit detection wire, testing, and other accessories and hardware necessary for installation of the conduit system shall be included in the overall cost of the conduit.
2) Continuous flexible conduit installation in earth or shoulder, shall be trenched, horizontal directional bored or drilled, or plowed at the Contractor's discretion, unless otherwise noted on the Plans, and shall be measured and paid as the unit items in Sections 2.4.2.4.D and 2.4.2.4.E, regardless of installation method used.
3) All conduit to be installed under streams shall be horizontal directional bored or drilled and shall be measured and paid as the unit items in Section 2.4.2.4.D through 2.4.2.4.E. No open trenching through an area deemed to be a current or wet weather stream will be allowed.
4) Continuous Flexible Conduit (Conduit Duct Bank) will be measured by the linear foot for each type of conduit bank indicated after installation and shall include the items identified in Section 2.4.2.1.

2.4.3 Rigid Galvanized Steel Conduit

1) Rigid Galvanized Steel Conduit, and all related materials including but not limited to couplings, mounting straps, bonding to ground, etc., that is installed on sign structures, poles or between the pull boxes and equipment cabinets is included in the cost of the item and will be measured separately.

2.4.4 Marking Tape

1) Marking Tape is included in the cost of the conduit and will not be measured separately.

2.4.5 Conduit Detection Wire

1) Conduit Detection Wire is included in the cost of the conduit and will not be measured separately.

2.4.6 Pull Tape

1) Pull Tape is included in the cost of the conduit and will not be measured separately.

2.4.7 Duct Plugs

1) Duct Plugs are included in the cost of the conduit and will not be measured separately.

2.5 Payment

The contract unit price shall be full compensation for all work specified in this Section.

Payment will be made under:

Item No.	Description	Unit
725-10.36	Jack and Bored Conduit	LF
725-10.37	Trenching For New Conduit Installation	LF
725-10.38	Conduit (2" DIA, HDPE)	LF
725-10.39	Conduit (1" DIA, RGS)	LF

All conduit will be paid per linear foot, as applicable, as follows:

1) Stored Materials will be paid per TDOT Standard Specifications.
2) Final Payment will be made after complete installation and testing.

SECTION 3
PULL BOXES

3.1 Description

This Section specifies the minimum requirements for furnishing and installing pull boxes and covers as indicated on the Plans.

Standard pull boxes shall be installed by the Contractor at the locations shown on the Plans. The Plans will indicate pull box locations relative to the cabinet and other installation details.

3.2 Materials

3.2.1 Type D Pull Box with Cover

The pull box shall meet the following requirements:

1) Minimum dimensions: 36" W x 26"L x 32" D exterior, pull box and cover shall be precast composite polymer concrete product. Pull boxes with a polymer cover but other material for the box will NOT be accepted.
2) Pull boxes and covers shall be single-stack open-bottom assemblies configured as shown in the Plans.
3) Vertical Design / Test Load - 22,500lbs/33,750lbs. Loadings shall comply with ANSI 77 2002 and shall exceed Tier 15 test provisions for both the cover and sidewall.
4) Pull box shall meet NEC 2005 for handhole enclosures.
5) Pull box cover shall be labeled (JOHNSON CITY ITS COMMUNICATIONS) with three inch (3") letters.

3.2.2 Type E Pull Box with Cover

1) Minimum dimensions: 49"W x 32" Lx 36"D exterior
2) Pull box and cover shall be precast composite polymer concrete product. Pull boxes with a polymer cover but other material for the box will NOT be accepted. Note this is a different pull box than shown in TDOT Standard Drawings.
3) Pull boxes and covers shall be single-stack open-bottom assemblies configured as shown in Plans.
4) Vertical Design / Test Load - 22,500lbs/33,750lbs. Loadings shall comply with ANSI 77 2002 and shall exceed Tier 15 test provisions for both the cover and sidewall.

5) Pull box shall meet NEC 2005 for handhole enclosures.
6) Pull box cover shall be labeled (JOHNSON CITY ITS COMMUNICATIONS) with three inch (3") letters.
7) Each Pull box shall come equipped with four (4) Cable Racks and twelve (12) Rack Hooks. The Cable Racks shall be a minimum of twenty-four (24) inches and Rack Hooks shall be a minimum of seven (7) inches in length. The Cable Racks and Rack Hooks shall be hot dipped Galvanized Steel.

3.2.3 Type C Pull Box with Cover

1) Type C pull boxes shall only be used for electrical power conduit/wiring.
2) Shall meet TDOT Standard Specifications for Road and Bridge Construction.

3.2.4 Terminator Ring

Shall meet the following requirements:

1) Shall accommodate the number of ducts penetrating into the side of the pull box.
2) The Terminator shall mount securely to the side of the box. The Terminator shall be a minimum of one (1) inch thick and allow adequate spacing of the ducts.
3) The Terminator shall be manufactured from a composite material that will not deteriorate in any type of weather conditions.

3.3 Installation Requirements

3.3.1 Type D Pull Box with Cover

1) This section shall be as per guidelines of the TDOT standard for the Standard Specifications for Road and Bridge Construction, latest version.
2) Pull boxes and covers shall be installed per the design details.

3.3.2 Type E Pull Box with Cover

1) This section shall be as per guidelines of the TDOT standard for the Standard Specifications for Road and Bridge Construction, latest version.
2) Pull boxes and covers shall be installed per the design details.
3) Cable Racks and Rack Hooks shall be installed per the Manufacturer's recommendations.
4) Ducts shall enter the side of the pull box using a Terminator and shall extend into the box no more than six inches (6") and no less than four inches (4").

3.3.3 Type C Pull Box with Cover

1) This section shall be as per guidelines of the TDOT standard for the Standard Specifications for Road and Bridge Construction, latest version.
2) Pull boxes and covers shall be installed per the design details

3.3.4 Terminator

1) Shall be installed per the Manufacturer's recommendations.

3.4 Measurement

3.4.1 Type D Pull Box with Cover

Pull Box will be measured in units of each and paid for at the contract price per each after the complete installation. The price bid shall include furnishing and installing the pull box and cover including excavation, gravel, restoration, and miscellaneous materials necessary for a complete and accepted installation. This price shall be full compensation for all labor, tools, materials, equipment, and incidentals necessary to complete the work.

3.4.2 Type E Pull Box with Cover

Pull Box will be measured in units of each and paid for at the contract price per each after the complete installation. The price bid shall include furnishing and installing the pull box and cover including excavation, gravel, restoration, cable rack rails and hooks, terminator rings, and miscellaneous materials necessary for a complete and accepted installation. This price shall be full compensation for all labor, tools, materials, equipment, and incidentals necessary to complete the work.

3.4.3 Type C Pull Box with Cover

Pull Box will be measured in units of each and paid for at the contract price per each after the complete installation. The price bid shall include furnishing and installing the pull box and cover including excavation, gravel, restoration, cable rack rails and hooks, terminator rings, and miscellaneous materials necessary for a complete and accepted installation. This price shall be full compensation for all labor, tools, materials, equipment, and incidentals necessary to complete the work.

3.4.4 Terminator

Shall be included in the measurement and payment of the Type C Pull Boxes, Type D Pull Boxes and Type E Pull Boxes and will not be measured separately for payment.

3.5 Payment

The contract unit price shall be full compensation for all work specified in this Section.

Payment will be made under:

Item No.	Description	Unit
725.10.24	Pull Box (Fiber Optic - Type D)	EACH
725.10.25	Pull Box (Fiber Optic - Type E)	EACH
725.10.44	Pull Box (Type C)	EACH

Pull boxes will be paid per each as follows:

1) Stored Materials will be paid per TDOT Standard Specifications.
2) Final Payment will be made after complete installation and testing.

SECTION 4
FIBER OPTIC INFRASTRUCTURE

4.1 Description

This Section specifies the minimum requirements for fiber optic infrastructure furnished and installed on this project. This work includes, but is not limited to, cable, splicing, termination, connectors, closures, panels, installation, and testing.

The fiber optic infrastructure will serve as the backbone for the communication systems (wireline) and will be used to transport data and video signals to/from field device locations using an Ethernet protocol.

4.2 Materials

4.2.1 General

1) Furnish fiber optic infrastructure materials that meet applicable industry standards including but not limited to:

   A) EIA/TIA

   B) RUS

   C) IEEE

   D) ICEA

   E) Telcordia

   F) ASTM

   G) UL

   H) NEC

   I) NESC

2) Upon request of the Engineer, provide certification from an independent testing laboratory that certifies that the cable conforms to industry standards.

3) Furnish fiber optic infrastructure materials recommended by the manufacturer for outside plant use and the intended application.

4) Furnish all optical fiber, fiber optic cable, fiber optic drop cable, optical termination and connection materials, and all ancillary and incidental materials that are single-mode and/or compatible. All materials shall meet the following requirements:

   A) Listed with and conform to RUS 7 CFR 1755.900 and associated fiber optic test procedures (FOTPs), ICEA 640, EIA/TIA-568-B.3,

598B, 758, Fiber Optic Connector Intermateability Standard (FOCIS), and Telcordia GR-20 core requirements.

B) Manufacturer is currently ISO 9001 certified. This requirement applies to assemblers of manufactured components, such as patch cords and termination cabinet interconnection cables.

C) All cables and termination infrastructure shall be assembled from Corning SMF28e, OFS All Wave or approved equivalent single-mode optical fiber.

D) All fibers and buffer tubes shall follow EIA/TIA-598B identification using colors. Do not use printed legends.

E) All cables shall have been manufactured and labeled no earlier than in the third calendar month preceding the Johnson City letting date of the contract.

5) Fiber optic installation and testing tools shall be maintained and calibrated in accordance with the tool manufacturer's recommendations. Provide tool manufacturer certified calibration documentation upon Engineer's request. Installation and testing tools include but are not limited to:

A) Fusion splicers

B) Cable pulling strain dynamometers and breakaway links

C) Cable air jetting/blowing systems

D) OTDRs

E) Optical attenuation testers (light sources and power meters)

6) Fiber optic installation and testing tools shall be operated only by Contractor personnel who have been trained and certified by the tool manufacturer. Installation and testing tools requiring certified operators include but are not limited to:

A) Fusion splicers

B) Cable air jetting/blowing systems

C) OTDRs

D) Optical attenuation testers (light sources and power meters)

4.2.2 Fiber Optic Cable (FO Cable)

1) Provide forty eight count (48-count) single mode fiber optic cable that meets the following requirements:

A) all-dielectric outside plant loose tube cable with central strength/anti-buckling member

B) dry water blocking materials and construction

C) reverse oscillating "SZ" stranded buffer tube construction

D) high tensile strength yarn

E) medium density polyethylene outer jacket

F) Forth eight (48) fiber cable with four (4) active buffer tubes and twelve (12) individual stranded fibers per buffer tube

G) cable construction design that allows no more than four (4) buffer tube positions

H) maximum diameter 0.48 inches

I) maximum weight 0.07 pounds per foot

2) For Trunk Cables 12 fiber requirement, provide twelve count (12-count) fiber optic cable that meets the following requirements:

A) all-dielectric outside plant loose tube cable with central strength/anti-buckling member

B) dry water blocking materials and construction

C) reverse oscillating "SZ" stranded buffer tube construction

D) high tensile strength yarn

E) medium density polyethylene outer jacket

F) twelve (12) fiber cable with one (1) active buffer tube and twelve (12) individual stranded fibers per buffer tube

G) cable construction design that allows no more than five (5) buffer tube positions

H) maximum diameter 0.48 inches

I) maximum weight 0.07 pounds per foot

3) Provide Corning ALTOS All-Dielectric, Pirelli FlexLink, OFS MiDia, or approved equivalent cables for outdoor rated cable.

4) Designate non drop cable as a trunk cable.

5) Ensure that the cable can withstand a maximum pulling tension of 600 lbf during installation and 180 lbf installed long term (at rest).

6) Provide cable with shipping, storage, and operating temperature range of -30°C to +70°C.

7) Provide cable with an installation temperature range of -30°C to +60°C.

8) Provide cable with outer jacket marking using the following template:

Manufacturer's Name – "Optical Cable" – Month/Year of Manufacture - Telephone Handset Symbol – "JOHNSON CITY" – "48F SM, or 12F SM" as applicable

9) Include in the outer jacket marking the cable sequential length in accordance with the following:

   A) In English units every two feet (2')

   B) Within -0/+1% of the actual length of the cable

   C) In contrasting color to the cable jacket

   D) Marking font height no less than 0.10 inches

   E) On any single length of cable on a reel, the sequential length markings do not run through "00000."

4.2.3 Fiber Optic Cable Indoor/Outdoor Riser Rated

1) Provide fiber optic indoor/outdoor cable that meets the following requirements:

   A) All-dielectric inside plant loose tube central core cable

   B) High tensile strength yarn surrounding the central tube core

   C) Dry water blocking materials and construction

   D) One hundred forty four (144) fiber cable with twelve (12) active buffer tubes and twelve (12) individual stranded fibers per buffer tube

2) Provide Corning Freedm LST All-Dielectric, Pirelli CentraLink, or approved equivalent cables.

3) Designate this cable as building entry.

4) Ensure that the cable can withstand a maximum pulling tension of 300 lbf during installation.

5) Provide cable with shipping, storage, and operating temperature range of -30°C to +70°C and an installation temperature range of -10°C to +60°C.

6) Provide cable with outer jacket marking using the following template:

Manufacturer's Name – "Optical Cable" – Month/Year of Manufacture - Telephone Handset Symbol – "JOHNSON CITY" – "144F SM"

7) Include in the outer jacket marking the cable sequential length in accordance with the following:

   A) In English units every two feet (2')

   B) Within -0/+1% of the actual length of the cable

   C) In contrasting color to the cable jacket

   D) Marking font height no less than 0.10 inches

E) On any single length of cable on a reel, the sequential length markings do not run through "00000".

4.2.4 Fiber Optic Drop Cable (FO Drop Cable)

1) Provide fiber optic drop cable that meets the following requirements:
   - A) all-dielectric outside plant loose tube central core cable
   - B) high tensile strength yarn surrounding the central tube core
   - C) dry water blocking materials and construction
   - D) twelve (12) individual stranded fibers contained within the central tube core
2) Provide Corning Freedm LST All-Dielectric, Pirelli CentraLink, or approved equivalent cables.
3) Designate this cable as drop cable.
4) Ensure that the cable can withstand a maximum pulling tension of 300 lbf during installation.
5) Provide cable with shipping, storage, and operating temperature range of -30°C to +70°C and an installation temperature range of -10°C to +60°C.
6) Provide cable with outer jacket marking using the following template:

Manufacturer's Name – "Optical Cable" – Month/Year of Manufacture - Telephone Handset Symbol – "JOHNSON CITY" – "12F SM"

7) Include in the outer jacket marking the cable sequential length in accordance with the following:
   - A) In English units every two feet (2')
   - B) Within -0/+1% of the actual length of the cable
   - C) In contrasting color to the cable jacket
   - D) Marking font height no less than 0.10 inches
   - E) On any single length of cable on a reel, the sequential length markings do not run through "00000".

4.2.5 Fiber Optic Fusion Splice (FO Splice, Fusion)

1) Provide fusion splices for splicing of all fibers on the project. Do not provide any other type of fiber splicing.
2) Perform fusion splicing with a fully automatic portable fusion splicer that provides consistent low loss (max 0.10 dB) splices. Splicer shall provide three-axis fiber core alignment using light injection and loss measurement techniques. The fusing process shall be automatically controlled. The splicer shall provide splice loss measurements on an integral display, as

well as a magnified image of the fiber alignment. The Contractor shall retain ownership of the fusion splicer.

4.2.6 Fiber Optic Connectors

1) Provide fiber optic connectors compliant with this TSP for all fiber optic infrastructure including, but not limited to, fiber optic termination cabinets, fiber optic drop panels, and fiber optic patch cords.
2) Provide only factory-installed keyed LC compatible connectors for all fiber optic infrastructure. Provide only factory-installed connectors of a type other than LC when required by the Network Switches. Do not use field-installed connectors. Do not use adapter couplers to change connector types.
3) Use ceramic ferule connectors factory-installed with a thermal-set heat-cured epoxy and machine polished mating face. Install connectors as per Manufacturer application and recommendations, including proper termination to the outer-tubing (900 micron tubing, 3 mm fan out tubing, etc.) required for the application.
4) Use connectors rated for an operating temperature of -40°C to +75°C.
5) Provide connectors that have an installed insertion loss of less than 0.50 dB, a typical loss of 0.20 dB, and an optical return loss of greater than 45 dB.
6) Use simplex connectors for all male LC connectors. Provide latching cover for two male connectors being used in a duplex configuration. Female couplers may be duplex but must allow simplex mating connectors.
7) Label each fiber position on panels and termination cabinets containing duplex couplers with the port/position ID as shown in the Plans.
8) Provide dust caps for all exposed male connectors and female couplers at all times until permanent connector installation.

4.2.7 Fiber Optic Termination Cabinet (FO Termination Cabinet)

1) Provide fiber optic termination cabinets in communications hubs, field junctions, and the TMC as shown in the Plans for termination of one hundred forty four (144) fiber outside plant (OSP) cable and forty eight (48) OSP cable. Multiple cabinets will be required in some locations.
2) Use termination cabinets that are fully compatible with all components of the fiber optic infrastructure as specified, including, but not limited to, fiber optic cable, fiber optic fusion splices, and fiber optic connectors.
3) Use rack-mount termination cabinets designed to fit standard nineteen inch (19”) EIA equipment racks.
4) Provide all mounting hardware and supports to mount the termination cabinets in the locations shown in the Plans.

5) Use fiber optic termination cabinets providing one hundred forty four (144) fiber connectors and capable of storing one hundred forty four(144) fusion splices in splice trays.

6) Use termination cabinets that integrate the splice trays and connector modules into one compartment within one cabinet, or houses the splice trays and connector modules in separate compartments integrated into one cabinet.

7) Maximum dimensions of a complete termination cabinet shall be seven (7) rack units high – twelve and a quarter inches (12.25") by sixteen inches (16") deep.

8) Use fiber optic termination cabinets with fully enclosed metallic construction and with a protective hinged front cover for the connector ports.

9) Provide cable access on all sides of the enclosed area behind the connector port panel.

10) Provide sufficient splice trays for storing one hundred forty four (144) fusion splices in twelve (12) or twenty four (24) splice increments.

11) Provide termination cabinets with fiber optic connector modules in a twelve (12) fiber configuration of six (6) rows of one (1) duplex connector couplers.

12) Connector modules shall mount vertically in the termination cabinet front panel.

13) Connector modules shall include clearly legible and permanent labeling of each of the twelve (12) fiber connector couplers, and shall be labeled and identified as shown in the Plans.

14) Provide factory-assembled twelve (12) fiber termination interconnect cables (pigtail cables) to be fusion spliced to the outside plant cable and connected to the rear of the connector modules.

    A) Termination interconnect cables shall be all-dielectric single jacketed cable with high tensile strength yarn surrounding twelve (12) individual 900 micron fibers following EIA/TIA-598B color identification with factory-installed connectors.

15) Provide all incidental and ancillary materials including but not limited to grommets, cable strain relief and routing hardware, blank connector panels, and labeling materials.

4.2.8 Fiber Optic Closure (FO Closure)

1) Provide fiber optic closures (splice closures) designed for outside plant use for splicing cables.

2) Use fiber optic splice closures that are impact-and corrosion resistant and waterproof when immersed in ten feet (10') of water.

3) Use fiber optic splice closures that are fully compatible with all components of the fiber optic infrastructure as specified, including but not limited to fiber optic trunk cable, fiber optic drop cable, and fiber optic fusion splices.

4) Use a cylindrical dome-type splice closure with cable entry at one end only and a sealed single-molded piece dome body of high density polyethylene or equivalent non-metallic material.

    A) The cable entry end shall be manufactured of a similar material as the dome body and shall seal the closure with flexible thermoplastic rubber or polymer gasket seals.

    B) The cable entry end shall include cable entrance ports that shall seal the cable and port opening with flexible thermoplastic rubber or polymer gasket seals with mechanical compression.

    C) Closures shall be re-enterable and re-sealed without the need for specialized tools or equipment, or the use of any additional parts.

    D) Do not use any heat shrink or caulk/encapsulate materials for sealing the assembled closure or terminated cables.

5) Provide splice closures with maximum outer dimensions of eight inches (8") diameter and twenty one inches (21") length unless otherwise approved by the Engineer.

    A) Splice closures shall provide cable entrance ports for at least five (5) fiber optic cables.

    B) At least two cable entrance ports shall accommodate cables of at least 0.60 inches outer diameter.

    C) The closure shall allow for the storage and express of at least six (6) unopened buffer tubes.

6) Provide a splice closure with a cable entry end with pre-template cable ports and a split-plate design permitting installation of the closure in mid-span cable segments.

7) The splice closure size shown in the Plans specifies the minimum number of fusion splices to be accommodated by the closure. With the splice closure, provide all materials to accommodate the number of splices specified by the closure size, including splice tray, storage, and organizing materials.

4.2.9 Fiber Optic Drop Panel (FO Drop Panel, 12F)

1) Provide fiber optic drop panels designed for outside plant use for terminating drop cables in equipment cabinets.

2) Use fiber optic drop panels that include the fiber optic drop cable as an integral component.

3) Use fiber optic drop panels that are fully compatible with all components of the fiber optic infrastructure as specified, including, but not limited to, fiber optic trunk cable, fiber optic closures, fiber optic fusion splices, and fiber optic connectors.

4) Use fiber optic drop panels that are factory manufactured assemblies of fiber optic drop cable with factory-installed fiber connectors and integral ruggedized fiber connector enclosures.

5) Use drop panels with twelve (12) fiber (six [6] duplex LC) connectors.

6) Use ruggedized fiber connector enclosures of thermally stable rigid plastic housings fully potted with a thermally stable epoxy filling that encapsulates the drop cable fan out, fibers and connector bodies.

7) Use permanent labels on the enclosure with contrasting color to identify each connector body by its associated fiber number.

8) Fiber connectors shall be arranged in rows of one (1) duplex connector couplers. All fiber connectors shall be arranged on one of the long (vertical) faces of the enclosure.

9) Provide a unique serial number permanently attached on the enclosure body of each drop panel.

10) Provide an outer non-metallic cable strain-relief boot where the drop cable enters the fiber connector enclosure and that secures the cable and to the enclosure; the strain-relief boot shall fully encircle the cable for a minimum of two inches (2”) from the enclosure’s outer surface.

11) Use fiber connector enclosures on the drop panel that are no more than two inches (2”) wide and deep (the maximum dimension of the enclosure plus fiber connector body) and no more than eleven inches (11”) long.

12) Provide a 0.125-inch thick aluminum mounting plate that secures to the fiber connector enclosure. The mounting plate shall have at least four mounting holes near the plate’s corners that permit horizontal or vertical mounting flush to a panel, and are spaced appropriately for vertical mounting to an EIA equipment rack rail using two of the mounting holes.

13) Test all completed and assembled fiber optic drop panels at the point of manufacture and provide two (2) copies of the manufacturer test documentation. Test each connected fiber in the drop panel to demonstrate compliance with all requirements for cables and connectors as detailed in

this TSP. Include in the test documentation the location station number where the drop panel is to be installed, the serial number of the drop panel, the drop cable sequential length markings at each end of the drop cable, and the total drop cable distance.

4.2.10 Cable Labels

1) Provide cable labels that meet the following requirements:
   A) Self-coiling wrap-around type
   B) PVC or equivalent plastic material with UV and fungus inhibitors
   C) Base materials and graphics/printing inks/materials designed for underground outside plant use including solvent resistance, abrasion resistance and water absorption
   D) minimum size of two and one half inches (2.5") wide by two and one half inches (2.5") long
   E) minimum thickness of 0.010"
   F) Orange label body with pre-printed text in bold black block-style font with minimum text height of 0.375".
2) Pre-print the following text legibly on labels used for all fiber optic trunk cables (FO Cable):

   JOHNSON CITY

   OPTICAL CABLE
3) Pre-print the following text legibly on labels used for all fiber optic drop cables (FO Drop Cable):

   JOHNSON CITY

   OPTICAL DROP CABLE
4) On all cable labels, print the text specified above twice on the label with the text of the second image inverted. The end result shall be text which "reads correctly" when the label is coiled onto a cable.

4.2.11 Fiber Optic Patch Cords

1) Provide fiber optic patch cords consisting of a length of fiber optic cable terminated on both ends.
2) All patch cords shall be factory pre-connected assemblies adhering to all applicable cable and fiber specifications stated in these Specifications.
3) Provide patch cords of the appropriate length for the necessary connections, maintaining minimum bend radius, and with no residual strain at the connector or anywhere on the patch cord itself beyond self-support. Patch

cords shall not have excess length beyond what is necessary for equipment connection and routing.

4) All patch cords shall be duplex zip-cord fiber cable with simplex LC connectors, except as otherwise allowed in Subsection 4.2.5.
   A) The two (2) connectors of each end of the patch cord shall be differentiated by different colors.
   B) Provide sufficient flexibility at each end to disconnect one connector without disturbing the other, or to allow swapping of the two connectors within the same duplex coupler without disturbing the remainder of the patch cord.
   C) Provide strain relief and reinforcement at the point where the duplex cable separates for the individual simplex connectors.
5) Fiber cable shall be three millimeters (3mm) jacketed cable with high tensile strength yarn protecting the inner fiber manufactured into a duplex zip-cord configuration. All Inside Plant (IP) patch cords shall meet NEC jacketing requirements.
6) Connector strain relief boots shall be fixed to the outer jacket and strength yarn.
7) Use yellow outer jackets for single mode fiber.
8) No splices of any type are allowed within a patch cord assembly.
9) Fully test each patch cord assembly at the source of manufacture and place those test results on a test tag for each mated pair of connectors. Attach the associated tag to one end of each fiber within the duplex assembly.

4.2.12 Fiber Optic Attenuator Patch Cords

1) Provide fiber optic attenuator patch cords that meet all requirements of Section 4.2.10 for fiber optic patch cords.
2) Each fiber in the attenuator patch cord shall contain a passive optical attenuator with the following performance characteristics:
   A) Dual-wavelength capability (1310 and 1550nm)
   B) Fixed attenuation value of 6dB +/- 15%.
   C) Minimum optical return loss forty (40) dB
   D) Operating temperature range no less than -30 to +65 C

4.2.13 Project Submittal Program Requirements

1) General Requirements

A) The Contractor shall provide project submittals for all fiber optic infrastructure as required in Section 1.8 of this TSP, including scheduling requirements. The project submittals for fiber optic infrastructure shall include, but are not limited to, the additional specific requirements in this subsection.

2) Fiber Optic Installation and Testing Tools

A) Provide project submittals including manufacturer-recommended operations, maintenance and calibration procedures for the following equipment:

i) Fusion splicers

ii) Cable pulling strain dynamometers and breakaway links

iii) Cable air jetting/blowing systems

iv) OTDRs

v) Optical attenuation testers (light sources and power meters)

B) Submit documentation and proof of manufacturer-recommended operator training and certification for the following equipment:

i) Fusion splicers

ii) Cable air jetting/blowing systems

iii) OTDRs

iv) Optical attenuation testers (light sources and power meters)

4.3 Installation Requirements

4.3.1 General

1) Install all fiber optic infrastructure according to the Manufacturer's recommended procedures and specifications.

4.3.2 Cable Shipping and Delivery

1) Package the cable for shipment on reels. Each package shall contain only one continuous length of cable. Construct the packaging so as to prevent damage to the cable during shipping and handling.

2) Seal both ends of the cable to prevent the ingress of moisture.

3) Include with each reel a weatherproof reel tag attached identifying the reel and cable that can be used by the manufacturer to trace the manufacturing

history of the cable and the fiber. Include with each cable a cable data sheet containing the following information:

A) Manufacturer name

B) Cable part number

C) Factory order number

D) Cable length

E) Factory measured attenuation of each fiber

4) Cover the cable with a protective and thermal wrap.

A) Securely fasten the outer end of the cable to the reel head so as to prevent the cable from becoming loose in transit.

B) Project the inner end of the cable a minimum of 6.5 feet into a slot in the side of the reel or into a housing on the inner slot of the drum, in such a manner to make it available for testing.

C) Plainly mark each reel to indicate the direction in which it is to be rolled to prevent loosening of the cable on the reel.

4.3.3 Cable Handling and Installation

1) Do not exceed the maximum recommended pulling tension during installation as specified by the cable Manufacturer.

2) Continuously monitor pulling tensions with calibrated measuring devices, such as a strain dynamometer.

3) Protect all pulled installations with calibrated breakaway links.

4) Do not violate the minimum recommended bend radius during installation as specified by the cable Manufacturer. Unless the Manufacturer's recommendations are more stringent, use the following guidelines for minimum bend radius:

A) Twenty times (20 X) Cable Diameter Short Term - During Installation

B) Ten times (10 X) Cable Diameter Long Term – Installed

5) Before cable installation, carefully inspect the cable reels and reel stands for imperfections or faults such as nails that might cause damage to the cable as it is unreeled.

6) Take all necessary precautions to protect reeled cable from vandals or other sources of possible damage while unattended. Any damage to reeled cable or the reel itself shall necessitate replacement of the entire cable section at Contractor's expense.

7) Whenever unreeled cable is placed on the pavement or surface above a pull box, provide means of preventing vehicular or pedestrian traffic through the area in accordance with the approved Maintenance of Traffic provisions.

8) Keep the cable continuous throughout the pull. Cable breaks and reel end splices are permitted only as shown in the Plans.

9) Where a cable ends in an underground fiber optic closure, secure and store all unused fibers and buffer tubes in splice trays in preparation for future reel end splicing and continuation.

4.3.4 Cable Storage

1) Properly store all cable to minimize susceptibility to damage.

   A) Maintain proper bend radius, both short and long term, during cable storage.

   B) Storage coils shall be neat in even length coils, with no cross over or tangling.

   C) Storage coils of different cables shall be kept completely separate except when the cables terminate in the same splice closure.

   D) Storage coils shall be secured to cable racking hardware with tie wraps, Velcro straps, or non-metallic cable straps with locking/buckling mechanism.

   E) Do not use adhesive or self-adhering tapes, metal wires and straps, or rope/cord.

2) Unless otherwise noted on the plans, the following are the requirements for cable storage for underground applications:

   A) Trunk cable in Type D pull box – twenty five feet (25’)

   B) Trunk cable in Type E pull box – two hundred feet (200’)

   C) Drop cable in Type D pull box – ten feet (10’)

   D) Drop cable in Type E pull box terminated in a splice closure – ten feet (10’)

   E) Communications hub or Control Center (interior) – Do not store slack cable inside the communications hub building or Control Center.

4.3.5 Fiber Optic Fusion Splice (FO Splice, Fusion)

1) Perform fusion splicing of all fiber optic splices as shown in the Plans.

2) Perform fusion splicing only in enclosed spaces such as splice trailers or tents specifically intended for this operation

3) Completed fusion splices shall have no more than 0.10dB optical loss as measured in accordance with Subsection 4.3.12.

4) Adequately protect all fusion splices in splice trays in a splice closure or termination cabinet. Provide the splice with strain relief and protection of the stripped fiber splice in a manner recommended by the fiber and the splice tray manufacturers.

5) Use fusion splice protectors of a heat shrink tubing that protects the splice and extends over the fiber coating. Splice protectors shall be compatible with and as recommended by the fiber and the splice tray manufacturers.

6) No bare fiber may be exposed.

4.3.6 Fiber Optic Termination Cabinet (FO Termination Cabinet)

1) Install sufficient Termination Cabinets to terminate all fibers in any of the field cabinets including within the separate splice tray storage compartment is so equipped. Install the connector modules for fibers one (1) through one hundred and forty-four (144) as shown in the Plans. Equip any remaining unused connector module slots with blank panels. Where 72 or less fiber appear in a field cabinet a 72 fiber Termination Cabinet may be used.

2) Install all fibers, buffer tubes, and cables following minimum internal and external bend radius, proper management, routing, fastening and protection, and with no residual strain on any connector, fiber, buffer tube or cable.

3) Install one cable buffer tube to one termination cabinet interconnect cable, matching fiber to fiber. Keep all fibers of the outside plant cable buffer tube and its corresponding termination interconnect cable complete within the same splice tray.

4) Label the front and rear of the termination cabinets with the trunk cable segment ID of the cable terminated within; use permanent clearly legible labels with minimum one half inch (0.5”) text height.

5) Label each end of termination cabinet interconnect cables to identify the twelve (12) trunk cable fibers/buffer tube connected; use permanent overlapping cable labels with clearly legible text.

4.3.7 Fiber Optic Closure (FO Closure)

1) Install fiber optic splice closures where and of the size shown in the Plans. Install splice closures in the center plus or minus three feet (± 3’) of the entire length of stored cable coils, or install at the end of cables that terminate in the pull box.

2) Store FO closures and cable coils on the pull box cable rack hooks. Keep all closures and cable coils off of the bottom of the pull box. Secure closures and/or cable coils as needed to hold them in place.

4.3.8 Fiber Optic Drop Panel (FO Drop Panel, 12F)

1) Prior to factory manufacture of fiber optic drop panels, verify the final installed location of all portions of each drop cable route from the splice closure to the equipment cabinet (including, but not limited to, the cabinet location, all conduit and pull boxes, and the splice closure location) to determine the required length of drop cable, including all splice closure and storage coils, to be factory manufactured with each drop panel. Do not use the plans quantity for determining the drop cable length to be factory manufactured.

2) Using the drop panel mounting plate, install drop panels on the side panel or equipment cabinets. Mount the fiber optic drop panel with the connectors horizontal or facing downward, and route the drop cable up or down as necessary. Route and secure the drop cable such that it is fully strain-relieved, does not violate the manufacturer's recommended bending radius, and does not interfere with the operation of or access to any cabinet equipment or electrical components.

3) Place one copy of the manufacturer test documentation in the equipment cabinet, where the drop panel is installed, and submit the other copy to the Engineer.

4.3.9 Cable Labels

1) Install cable labels on all trunk and drop fiber optic cables. Clean the installed cable of all dirt and grease before applying any label.

2) Label all cables in or at every location where the cable is exposed outside of a conduit, innerduct or pole, using the cable IDs for trunk cables or the device number for drop cables. As a minimum, install cable labels in the following locations:

   A) Within twelve inches (12") of every cable entry to a pull box, equipment cabinet, communications hub, or the TMC.

   B) Within twelve inches (12") of the exterior entry point of every fiber optic splice closure, termination cabinet, and drop panel.

   C) Every thirty feet (30') for the entire length of cable in any storage coil in pull boxes.

4.3.10 Fiber Optic Patch Cords

1) Install fiber optic patch cords to connect all electronic equipment with the fiber optic infrastructure. Follow port assignments as shown in the Plans.

2) Install fiber optic patch cords to connect all active optical paths between fiber optic termination cabinets in communications hubs as shown in the Plans.

3) Neatly route and dress all patch cords to the connected devices and within cable management facilities.

4.3.11 Fiber Optic Attenuator Patch Cords

1) Provide fiber optic attenuator patch cords in accordance with Section 4.3.10.

4.3.12 Project Testing

1) General Requirements

   A) The Contractor shall conduct a project testing program for all fiber optic infrastructure as required in Section 1.5 of this TSP. The project testing program for fiber optic infrastructure shall include but is not limited to the additional specific requirements in this subsection.

   B) All test results shall confirm physical and performance compliance with this TSP including, but not limited to, optical fibers and fusion splices. No event in any given fiber may exceed 0.10 dB. Any event measured above 0.10 dB shall be replaced or repaired at the event point.

   C) In addition to the notification requirements of Section 1.5, provide the tentative date, time and location of fiber optic infrastructure testing no less than seven (7) days in advance of the test. Provide confirmed date, time and location of fiber optic infrastructure testing no less than forty eight (48) hours before conducting the test.

   D) Provide test results documentation in electronic format (one (1) copy) and printed (three (3) copies) format. Electronic formats shall be readable in Microsoft Excel or other approved application. Printed copies shall be bound and organized by cable segment.

   E) Provide all test results in English units of measure of length.

   F) Submit all test results documentation to the Engineer within fourteen (14) days of completion of the tests. The Engineer will review test documentation in accordance with the Submittal Review Process in Section 1.8.

2) Pre-Installation Test (PIT)

A) Perform a PIT on all FO Cable prior to any cable removal from the shipping reels. Perform a PIT on each cable reel delivered to the job site.

B) The PIT for FO Cable shall include but is not limited to:

i) A visual inspection of each cable and reel

ii) An OTDR Test and documentation as required in the SAT below, for three randomly selected fibers from each buffer tube.

iii) An Optical Attenuation Test is not required. If the contractor decides to perform one for their own protection, said test should be documented and provided to the Engineer.

3) Conditional Acceptance Test (CAT)

A) Perform this test on all fiber optic infrastructure on this project after field installation is complete including, but not limited to, all splicing and terminations.

B) A test of each fiber in each cable shall include OTDR Tests and Optical Attenuation Tests.

C) All fibers in all FO Cables and FO Drop Cables shall be tested from termination point to termination point, including:

i) fibers from FO Termination Cabinet to FO Termination Cabinet

ii) fibers from FO Termination Cabinet to FO Drop Panel

iii) fibers from FO Drop Panel to FO Drop Panel

iv) fibers from FO Termination Cabinet to the end of the cable run in the last FO Closure.

D) All test results shall confirm compliance with this TSP including but not limited to optical fibers and fusion splices. No event in any given fiber may exceed 0.10 dB. Any event measured above 0.10 dB shall be replaced or repaired at the event point.

E) Test documentation shall include but is not limited to:

i) Cable & Fiber Identification

- Cable & Fiber ID and Location – Physical location (device ID and station number of FO Termination Cabinet, FO Drop Panel, or cable end FO closure), fiber number, and trunk or drop cable ID for both the beginning and end point.

- Operator Name

- Engineer's Representative
- Date & Time

ii) Setup and Test Conditions Parameters

- Wavelength
- Pulse width Optical Time Domain Reflectometer (OTDR)
- Refractory index (OTDR)
- Range (OTDR)
- Scale (OTDR)
- Ambient Temperature

iii) Test Results for OTDR Test (each direction and averaged)

- Total Fiber Trace (miles)
- Splice Loss/Gain (dB)
- Events > 0.05 dB
- Measured Length (Cable Marking)
- Total Length (OTDR Measurement)

iv) Test Results for Attenuation Test (each direction and averaged)

- Measured Cable Length (Cable Marking)
- Total Length (OTDR Measurement from OTDR Test)
- Number of Splices (Determined from As-Builts)
- Total Link Attenuation

F) OTDR Test

i) Conduct the OTDR Test using the standard operating procedure and recommended materials as defined by the manufacturer of the test equipment.

ii) Use a factory patch cord ("launch cable") of a length equal to the "dead zone" of the OTDR to connect the OTDR and the fiber under test.

iii) Conduct bi-directional OTDR Tests for each fiber. Calculate bi-directional averages.

iv) Conduct all tests at 1310 and 1550 nm for single mode cable.

G) Optical Attenuation Test

i) Conduct the Optical Attenuation Test using the standard operating procedure and recommended materials as defined by the manufacturer of the test equipment.

ii) Conduct bi-directional Optical Attenuation Tests for each fiber. Calculate bi-directional averages.

iii) Conduct all tests at 1310 and 1550 nm for single mode cable.

4.4 Measurement

4.4.1 Fiber Optic Cable (FO Cable, 12F)

Fiber Optic Cable (FO Cable, 12F) will be measured in units of linear feet and paid for at the contract price per linear foot. The price bid shall include, the length in feet of actual cable installed as measured from the cable sequential length markings, cable labels, patch cords, ancillary and incidental materials, testing, documentation and all labor and equipment necessary to complete the work. No measurement for payment will be made for cable storage amounts in excess of that required in this TSP or the Plans. This price shall be full compensation for all labor, tools, materials, equipment and incidentals necessary to complete the work.

4.4.2 Fiber Optic Cable (FO Cable, 48F)

Fiber Optic Cable (FO Cable, 48F) will be measured in units of linear feet and paid for at the contract price per linear foot. The price bid shall include, the length in feet of actual cable installed as measured from the cable sequential length markings, cable labels, patch cords, ancillary and incidental materials, testing, documentation and all labor and equipment necessary to complete the work. No measurement for payment will be made for cable storage amounts in excess of that required in this TSP or the Plans. This price shall be full compensation for all labor, tools, materials, equipment and incidentals necessary to complete the work.

4.4.3 Fiber Optic Cable Indoor/Outdoor (FO Cable, 144F)

Fiber Optic Cable Indoor/Outdoor (FO Cable, 144F) will be measured in units of linear feet and paid for at the contract price per linear foot. The price bid shall include, the length in feet of actual cable installed as measured from the cable sequential length markings, cable labels, patch cords, ancillary and incidental materials, testing, documentation and all labor and equipment

necessary to complete the work. No measurement for payment will be made for cable storage amounts in excess of that required in this TSP or the Plans. This price shall be full compensation for all labor, tools, materials, equipment and incidentals necessary to complete the work.

4.4.4 Fiber Optic Drop Cable (FO Drop Cable, 12F)

Fiber Optic Drop Cable (FO Drop Cable, 12F) will be measured in units of linear feet and paid for at the contract price per linear foot. The price shall include the length in feet of actual cable installed as measured from the cable sequential length markings, fiber optic connectors, cable labels, patch cords, manufacture with the fiber optic drop panel, ancillary and incidental materials, testing, documentation and all labor and equipment necessary to complete the work. No measurement for payment will be made for cable storage amounts in excess of that required in this TSP or the Plans. This price shall be full compensation for all labor, tools, materials, equipment and incidentals necessary to complete the work.

4.4.5 Fiber Optic Closure (FO Closure)

Fiber Optic Closure (FO Closure) will be measured in units of each and paid for at the contract price per each. The price bid shall include but not limited to cable labels, patch cords, mounting hardware, ancillary and incidental materials, testing, documentation and all labor and equipment necessary to complete the work. This price shall be full compensation for all labor, tools, materials, equipment and incidentals necessary to complete the work.

4.4.6 Fiber Optic Connectors

Fiber Optic Connectors are included in the quantities of other pay items and will not be measured separately for payment.

4.4.7 Fiber Optic Splice, Fusion (FO Splice, Fusion)

Fiber Optic Splice, Fusion (FO Splice, Fusion) will be measured in units of each and paid for at the contract price per each. The price bid shall include but not limited to all ancillary and incidental materials, testing, documentation and all labor and equipment necessary to complete the work. This price shall be full compensation for all labor, tools, materials, equipment and incidentals necessary to complete the work.

4.4.8 Fiber Optic Termination Cabinet (FO Termination Cabinet)

Fiber Optic Termination Cabinet (FO Termination Cabinet) will be measured in units of each and paid for at the contract price per each but not limited to fiber optic connectors, cable labels, patch cords, splice tray, mounting hardware, ancillary and incidental materials, testing, documentation and all labor and equipment necessary to complete the work. This price shall be full

compensation for all labor, tools, materials, equipment and incidentals necessary to complete the work.

4.4.9 Fiber Optic Drop Panel (FO Drop Panel, 12F)

Fiber Optic Drop Panel (FO Drop Panel, 12F) will be measured in units of each and paid for at the contract price per each. The price bid shall include but not limited to fiber optic connectors, cable labels, patch cords, manufacture with the fiber optic drop cable, mounting hardware, ancillary and incidental materials, testing, documentation and all labor and equipment necessary to complete the work. This price shall be full compensation for all labor, tools, materials, equipment and incidentals necessary to complete the work.

4.4.10 Cable Labels

Cable Labels are included in the quantities of other pay items and will not be measured separately for payment.

4.4.11 Fiber Optic Patch Cords

Fiber Optic Patch Cords are included in the quantities of other pay items and will not be measured separately for payment.

4.4.12 Fiber Optic Attenuator Patch Cords

Fiber Optic Attenuator Patch Cords are included in the quantities of other pay items and will not be measured separately for payment.

4.5 Payment

The contract unit price shall be full compensation for all work specified in this Section.

Payment will be made under:

Item No.	Description	Unit
725-07.44	Fiber Optic Splice, (Fusion)	EACH
725-10.16	FO Closure, 72F	EACH
725-10.19	FO Drop Panel (12F)	EACH
725-10.20	FO Termination Cabinet (48F)	EA
725-10.21	FO Termination Cabinet (144F)	EA
725-10.28	Fiber Optic Cable, 48F (Aerial)	LF
725-10.29	Fiber Optic Cable, 48F (In Conduit)	LF
725-10.30	Fiber Optic Cable 12F (SMFO Drop Cable)	LF

725-10.48	FO Indoor/ Outdoor Cable 144F	LF

CH

Fiber optic infrastructure, except as specified below, will be paid per linear foot or per each, as applicable, as follows:

1) 25% of the contract unit price upon delivery and PIT test.
2) Additional 35% of the contract unit price for complete installation of cables.
3) Additional 30% of the contract unit price for completion of CAT testing and documenting of all fibers in any linear foot and in each splice or termination/connection location, and submission of and acceptance of all test documentation.
4) Final 10% of the contract unit price upon Final System Acceptance.

Fiber optic splices, fusion, will be paid per each as follows:

1) 60% of the contract unit price upon completion of the splice.
2) Additional 30% of the contract unit price for completion of CAT testing and documenting of all fibers in any lineal foot and in each splice or termination/connection location, and submission of and acceptance of all test documentation.
3) Final 10% of the contract unit price upon Final System Acceptance.

SECTION 5
RS-232 / 4-WIRE FSK MODEM

5. 1 Description

This Section specifies the minimum requirements for a Modem furnished and installed on this project. The work shall consist of providing all labor, materials, equipment, and incidentals necessary to furnish, install, and test Modems.

The Modem device will be used to communicate bi-directionally through a Terminal Server to the IP-based Ethernet network system. The device must work with all Traffic Controllers currently installed within the project limits.

5. 2 Materials

The equipment and software shall comply with the following minimum material Specifications:

5.2.1 General Capabilities and Performance Requirements

The Modem shall include the following general requirements:

1) RS-232 Interface
2) RJ-45/DB9 Serial port Connection
3) RS-232/422/485 selectable serial connections
4) Baud Rates 1,200 to 19,200 bps
5) Temperature Hardened to NEMA Specification
6) 4-Wire FSK Interface
7) Integral Power Supply
8) Switch Selectable Timings
9) Frequency Shift Keying Modulation
10) Mark and Space Frequencies to match Peek Controllers
11) Indicators, Transmit Data, Receive Data, Power (minimum)
12) Dynamic Range +3dBm to -48dBm
13) Carrier Detect Hystersis 3dB
14) Demodulator Distortion <10% Peak
15) Transmit level -8 dBm to 0 dBm adjustable
16) Transmit Frequency Tolerance +1%
17) Multi-drop Capability

5.2.2 Physical and Environmental Specifications

The minimum physical and environmental requirements include:

1) Each Modem shall have the following ports:
   A) 4-Wire Duplex FSK Port
   B) Serial Data Interfaces: Four (4) RJ-45/DB9 port.
2) Operate in a temperature range of NEMA Hardened Equipment
3) Operate in relative humidity of 5% to 90% (Non-condensing)
4) Approximate Dimensions
   A) 8” x 5” x 1”
5) Provide external markings -- all connectors, indicators, and replaceable components shall be permanently marked and traceable to the supplied documentation, including schematics and parts list. The external markings shall include the product function name, model number, serial number, and manufacturer’s name.
6) Modem shall be shelf mountable. Shelf for the cabinet shall be provided if needed. Other mounting options may be submitted for review and approval by the Engineer.

5.2.3 Management Capabilities

The minimum management system requirements shall include:

1) Remote Management and Port Configurable
2) Local Configuration Port
3) Port Configurable via Telnet

5.2.4 Electrical

The minimum electrical/power requirements include:

1) 120 VAC

5. 3 Installation Requirements

All equipment shall be installed according to the manufacturer’s recommendations, the Plans and as follows:

1) Materials and associated accessories/adapters shall not be applied contrary to the manufacturer’s recommendations and standard practices.
2) The Contractor shall furnish all tools, equipment, materials, supplies, and manufactured hardware, and shall perform all operations and equipment integration necessary to provide complete, fully operational communications

equipment as specified herein, within the Plan set, and/or in the Contract Documents. It is the responsibility of the contractor to ensure DCE/DTE conflicts are addressed and that he equipment performs its required function when installed.

3) The Contractor shall provide the Engineer with a written inventory of items received and the condition in which they were received. Once received, the equipment becomes the Contractor's responsibility. The Contractor shall provide all labor and equipment necessary to move inventory out of the designated storage facility and to transport it to the installation location. All equipment shall be installed according to the manufacturer's recommendations and as directed by the Engineer.

5.3.1 Testing Requirements

Testing shall include, but not be limited to, the following:

1) General Requirements

   A) The Contractor shall conduct a project testing program for all Modems as required in Section 1.5 of this TSP. The project testing program shall include, but is not limited to, the additional specific requirements in this subsection.

   B) All test results shall confirm physical and performance compliance with this TSP.

   C) Submit all test results documentation to the Engineer within fourteen (14) days of completion of the tests. The Engineer will review test documentation in accordance with the Submittal Review Process in Section 1.8.

2) Bench Test System (BTS)

   A) This item requires a documented bench test prior to installation.

   B) The Contractor shall demonstrate the ability of the Modem to communicate with the attached Terminal Servers through the serial port.

   C) The Contractor shall demonstrate the ability of the Modem to communicate with a Siemens EPAC Traffic Controller.

5. 4 Measurement

The Modems will be measured in units of each and paid for at the contract price per each. The price bid shall include furnishing, installing warranties, full operation and configuring the Modem in accordance with applicable Standards, Specifications, and requirements. The price bid shall also include the mounting hardware, patch cords, serial port cables or connectors, power cable, user manuals, testing,

warranties, and any and all other equipment required to complete installation of the unit. This price shall be full compensation for all labor, tools, materials, equipment and incidentals necessary to complete the work.

5. 5 Payment

The contract unit price shall be full compensation for all work specified in this Section.

Payment will be made under:

Item No.	Description	Unit
725-10.18	RS-232 / 4 –wire FSK Modem	EACH

The Modem Equipment will be paid per each as follows:

1) 50% of the contract unit price upon approval of, Bench Test System results.
2) Additional 40% of the contract unit price upon approval of Conditional System Acceptance Test results.
3) Final 10% of the contract unit price upon Final System Acceptance.

SECTION 6
EQUIPMENT CABINETS

6.1 Description

This Section specifies the minimum requirements for equipment cabinets furnished and installed on this project as shown in the Plans. The cabinets will provide a protective outdoor housing enclosure in which to install field hardware required for ITS devices to communicate with the TMC. Major elements of the equipment cabinet include the cabinet housing and equipment mounting hardware, interior wiring and termination facilities, power supplies, electrical accessories, and field installation.

6.2 Materials

6.2.1 General

1) Furnish only new equipment and materials. Furnish equipment cabinets and integral materials recommended by the manufacturers for outside plant use and the intended application. This requirement includes wiring and electrical materials and configurations (including connector pin-outs) that are wholly or partially related to the field device applications (CCTV).
2) Furnish and configure equipment cabinets to be installed at locations as shown in the Plans. Furnish and configure all equipment and materials for each specific location as shown in the Plans.
3) Provide electrical system and components with UL-listings.
4) Unless otherwise specified, provide wire and cable with stranded copper conductors, 75°/90° Celsius wet/dry rated insulation, and sized for the maximum voltage and current in the circuit.
5) All components specified as rail-mounted shall be compliant as follows:
    A) DIN EN 50022 (NS35) component rails
    B) Component rails shall be the perforated type and of sufficient length as to protrude beyond the mounted components for fastening to cabinet panels as specified herein.
    C) UL 1059
    D) UL 486E
    E) NEMA ISC-4
6) Terminal blocks and component terminals shall be nickel-plated copper, copper alloy or brass.

7) Terminal blocks shall have voltage and current ratings greater than the ratings of the wires that are terminated, and shall be assembled into housing enclosures such that all exposed surfaces are touch-safe. Conductor fastening screws shall be captive. Terminal block housings shall be colored as follows:

    A) 120 VAC line/hot: black

    B) 120 VAC neutral: white

    C) 24 VDC positive: red

    D) 24 VDC negative: gray

    E) RS485 communications: orange

    F) Ground: green or green/yellow

8) Provide door locks for all cabinet doors, keyed to Corbin #1R6380 using heavy-duty blanks and mastered to traffic industry standard No. 2 Corbin 1R6380 or equivalent. Provide one key with each cabinet.

9) Provide agency name, device name and ID labels on all cabinets. Labels shall meet the following minimum requirements:

    A) Labels shall be flat black lettering on a reflective white background. Lettering shall be a minimum of one inch (1") in height.

    B) Labels shall be manufactured from pre-coated adhesive backed reflective sheeting material meeting the minimum requirements of AASHTO M268 Type 1.

    C) The agency name labels shall be "JOHNSON CITY ITS" in one continuous adhesive sheet.

    D) The device ID labels shall include the device name as an acronym and a hyphen, and shall be one continuous adhesive sheet. Device name acronyms are "CCTV- ID" "Field Hub - ID.

    E) The device ID shall be numerals or letters corresponding to the location and shall be installed adjacent to the acronym sheet. Multiple device IDs of the same type shall be on the same line separated with a space. Examples: "CCTV-23" "Field Hub G"

    F) Where CCTV equipment is installed in existing traffic control signal cabinets, device ID labels will be installed on the existing cabinet.

    G) Labels shall be installed along the top of the cabinet door (front cabinet door on Type B cabinets), with JOHNSON CITY ITS label at the top (only on new ITS / CCTV cabinets) and the device ID labels immediately underneath.

10) Provide a voltage label on all new ITS / CCTV cabinets or enclosures in accordance with the NEC labeling requirements. Voltage labels shall meet the following minimum requirements:

    A) Labels shall be flat black lettering on a reflective yellow background. Lettering shall be a minimum of one inch (1") in height.

    B) Labels shall be manufactured from pre-coated adhesive backed reflective sheeting material meeting the minimum requirements of AASHTO M268 Type 1.

    C) Labels shall include the voltages entering the cabinet and shall be one continuous adhesive sheet. Examples are "120VAC" or "24VDC".

    D) Labels shall be installed on all cabinet doors.

6.2.2 Type B Cabinet

1) All Type B cabinets shall be identical in manufacture and assembly, capable of supporting one (1) CCTV, one (1) Type A network switch, one (1) video encoder, and fiber drop panel terminations, regardless of the devices shown in the Plans at a specific location.

2) A complete Type B cabinet shall be an assembly consisting of a cabinet housing and electrical subsystems.

3) Provide a Type B cabinet housing meeting the following requirements: A)

    Conforms to the standards for a Type 170 336S (approximate exterior dimensions 46 inches (H) x 24 inches (W) x 23 inches (D)), including standard EIA nineteen inch (19") rack cabinet cage, as defined in the latest version of the Caltrans Transportation Electrical Equipment Specifications (TEES). The minimum clear vertical inside dimension of the nineteen inch (19") rack for equipment mounting shall be thirty nine and one half inches (39.5"). Standard cabinet accessories for traffic signal operations, such as controller, power distribution assembly, input/output file and termination panels, and the police panel, are not required as part of this cabinet assembly.

    B) Provide all mounting hardware necessary including three quarter inch (3/4") stainless steel mounting straps.

    C) Includes hooks, welded to the inside of each cabinet door, for hanging a side-opening, resealable, opaque, heavy-duty plastic documentation pouch with metal or hard-plastic reinforced holes for the door hooks. Provide one (1) pouch with each cabinet.

D) Includes a rack-mounted cabinet sliding storage drawer in accordance with the following:

A. Approximate exterior dimensions 1.75 inches (H) x 16 inches (W) x 14 inches (D)

B. Telescoping drawer guides to allow full extension from the rack cage

C. Opening storage compartment lid to access storage space for cabinet documentation and other items

D. Supports a weight of twenty five pounds (25 lb) when extended

E. Non-slip plastic laminate surface attached to the compartment lid which covers a minimum of ninety percent (90%) of the surface area of the lid

F. Mounted in the rack cage with the bottom surface approximately nine inches (9") above the bottom of the rack cage.

E) Includes side panels within the two sides of the rack cabinet cage, inserted and fastened from the inside of the cage. Use side panels fabricated from 0.125 inch 5052 sheet aluminum alloy and sized to the full inside dimensions of the rack cabinet cage. Side panel surfaces for equipment mounting are denoted by cabinet side, with the "right" side being the support pole side, and by upper or lower as related to the sliding storage drawer. Upper right side panel (support pole side of cabinet, above the drawer) and lower left side panel (opposite side from the support pole, below the drawer) are example side panel surface names.

F) Includes a twelve inch (12") long DIN rail (for future components) mounted in the horizontal and vertical center of the lower left side panel.

4) Provide Type B cabinet electrical subsystems meeting the following requirements:

A) Includes an electrical distribution module comprised of the following DIN rail-mounted components:

A. Service entrance terminal block with positions for 120VAC line, neutral, and ground and capable of terminating minimally #6 through #8 AWG wire, located at one end of the mounting rail with an approximately three quarter inch (0.75") blank spacer module adjacent to the main cabinet breaker.

B. Main cabinet automatic overcurrent 15A circuit breaker that is UL-listed and of the mechanical-magnetic type rated for use from -18° C to 50° C minimum.

C. Main cabinet surge suppressor for single-phase 120VAC service entrance, parallel wired with a clamp voltage of approximately 280V and capable of a surge current of at least 20,000 amps.

D. Main cabinet filter for power line noise and switching transient suppression, integral to, or separate from and wired to, the main cabinet surge suppressor.

E. Electrical distribution terminal block for line and neutral conductors parallel wired to the main cabinet surge suppressor but non-filtered, with a minimum terminating capability of six conductors of #10 to #18 AWG. Label the terminal block as "ACCY POWER".

F. Electrical distribution terminal block for line and neutral conductors for circuits on the load/equipment side of the power line filter, with a minimum terminating capability of six conductors of #10 to #18 AWG. Label the block as "EQUIP POWER".

G. Electrical distribution terminal block for grounding and bonding conductors located on the same rail but separate from the service entrance terminal block and connected to the entrance ground with a #6 AWG green insulated wire. The grounding block shall have a minimum terminating capability of two #6 AWG conductors and ten #10 to #18 AWG conductors.

H. Ground fault interrupt duplex receptacle (NEMA 5-15R) with 2.5A circuit breaker connected to the ACCY POWER distribution block. Permanently affixed to the receptacle, provide two red, orange or green/yellow labels with minimum 0.25 inch lettering with the legend "300 WATTS MAX". This receptacle is for technician use only and shall not be used to power equipment.

I. Interconnection wiring between all electrical distribution module components and the other systems included in or housed in the Type B cabinet

J. Complete module mounted on the cabinet lower right side panel

B) Include a cabinet lighting subsystem comprised of the following components:

K. One (1) fluorescent lighting fixture, minimum fifteen (15) watt, mounted on the inside top front portion of the cabinet, with a cool white lamp with shatter-proof cover and operated by a normal power factor UL listed ballast.

L. A resistor-capacitor network noise suppressor installed across the light fixture power terminals

M. Two (2) door-actuated switches installed to turn on the cabinet light when either door is opened.

N. Powered from the ACCY POWER distribution block.

C) Include two (2) duplex non-GFCI equipment power receptacles (NEMA 5-15R) connected to the EQUIP POWER distribution block mounted on the upper rear corner of the cabinet upper right side panel. Permanently affixed to the receptacle, provide two red, orange or green/yellow labels with minimum one quarter inch (0.25") lettering with the legend "75 WATTS MAX" permanently affixed to the receptacle.

6.2.3 Roadside Fiber Junction Cabinet (Type C Cabinet)

The Contractor shall provide a Pad-mounted cabinet for each Field Junction (FJ). The cabinets contain fiber termination patch panels used to jumper circuits between the systems. They have no power connections and therefore do not require the electrical elements of the Type B cabinets. The cabinet shall meet the following requirements:

1) Shall meet the applicable requirements of a Type B equipment cabinet in Section 6.2.2.

2) Shall be Pad mounted.

3) Minimum of four (4) "two-½ inch galvanized" anchor bolts shall be used to secure the cabinet to the foundation.

4) Provide agency name, device name and ID labels on all roadside FJ cabinets. Labels shall meet the following minimum requirements:

A) Labels shall be flat black lettering on a reflective white background. Lettering shall be a minimum of one inch (1") in height.

B) Labels shall be manufactured from pre-coated adhesive backed reflective sheeting material meeting the minimum requirements of AASHTO M268 Type 1.

C) The agency name labels shall be "CITY OF JOHNSON CITY" in one continuous adhesive sheet.

D) The device ID labels shall include shall include the acronym and hyphen "Field Junction-"and shall be one continuous adhesive sheet.

E) The device ID shall be numerals corresponding to the location and shall be installed adjacent to the acronym sheet. Example "FJ-C".

F) Labels shall be installed along the top of the cabinet door (front cabinet door on Field Junction cabinets), with CITY OF JOHNSON CITY ITS label at the top and the device ID labels immediately underneath.

6.2.4 Traffic Signal Cabinet Modifications

1) The contractor shall perform modifications to the Traffic Signal Controller Cabinets to prepare for the new equipment being installed.
2) Install four (4) NEMA 5-15 15 A/125 V grounded receptacles, in most cases on the right side of the cabinets
3) Install 15 Amp Circuit Breaker for CCTV Circuit.
4) Wire the receptacles to the filtered AC + and AC- available on the power bus using 14 gauge stranded wire.
5) Ensure that the receptacles are spaced apart far enough to allow equipment power supplies to use a receptacle without blocking an adjacent receptacle.
6) Ensure that the conduit elbow entering the cabinet meeting fiber bend radius requirements and replace with acceptable bend radius conduit where shown on plans.

6.3 Installation Requirements

6.3.1 General

1) Install and configure cabinets as shown in the Plans, including installations and dimensions given for pole-mounting in relationship to the surrounding grade.
2) Bond all cabinets to the pole grounding lug with minimum #6 AWG stranded copper bare or green-insulated cabinet grounding wire. Alternately on existing poles only, bond the cabinet grounding wire to an existing pole grounding wire with a cast brass or copper alloy threaded compression connector within 4 inches of the existing pole grounding lug.
3) Do not install electrical service or electronic devices in the cabinet or connect to the cabinet until ground testing for the pole or structure has been successfully completed and accepted, and the cabinet ground connection has been installed.

6.3.2 Type B Cabinet

1) Install and configure equipment in the Type B cabinet in accordance with the requirements for that equipment, Type A network switches, video encoders, and fiber distribution or drop panels.
2) Do not install electronic devices in the cabinet until electrical service has been installed and activated, and the cabinet ventilation fan is operational.
3) Install Type A network switches and video encoders in the topmost area of the cabinet rack. Use the equipment receptacles for power.
4) Install supporting equipment/electronics for CCTV in the lower area of the cabinet upper left side panel. Ensure there is no physical or access conflict with the network switch and video encoder. Use the EQUIP POWER distribution block for the power source.
5) Install fiber drop panels in a vertical configuration on the lower rear edge of the cabinet upper right side panel.

6.3.3 Traffic Signal Cabinet Modifications

1) Coordinate with City of Johnson City Traffic Signal Maintenance to rearrange traffic signal equipment making room for new installations.
2) Provide City of Johnson City twenty four (24) hour notice when disruption of signal service will be necessary.
3) Contractor shall be responsible for the cost of traffic control and shall not disrupt signal service without advance approval.
4) Install NEMA 5-15 receptacles as required in Section 6.2.4.
5) Configure equipment in the Traffic Signal Cabinet in accordance with the requirements for that equipment, Type A network switches, video encoders, pavement sensors, modems and fiber distribution or drop panels.
6) When possible install the Type A Network Switch on the top shelf close to the Fiber Drop Panel.
7) Do not install electronic devices in the cabinet if the cabinet ventilation fan is not operational.
8) Install Type A network switches and video encoders in the available areas of the cabinet rack. Be consistent whenever possible and install in like positions in similar type cabinets. Use the installed equipment receptacles for power.
9) Route power cords neatly along the back wall of the cabinet so as not to block the removal of any traffic signal equipment.
10) All power cords/power supplies shall be mechanically secured to the receptacles.

11) Ensure there is no physical access conflict with Traffic Controllers, Conflict Monitors, or Detection equipment.
12) Install fiber drop panels in a vertical configuration on the upper rear wall of the cabinet.
13) Neatly notch the left rear corner of each shelf to allow the drop cable to route up the left rear of the cabinet. Remove any burs or sharp edges.
14) Neatly route fiber patch cords between the fiber drop panel and the Type A network switch. Do not allow patch cords to hang in a position that would allow pinching when the door is opened or closed.
15) When installing CCTV equipment route all cables along the same route as the fiber optic drop cable.
16) CCTV power supplies shall be placed on the right wall of the cabinet to conform to the NEMA TS-1 specification.

6.3.4 Project Testing

General Requirements

1. The testing program for the type B and type C cabinets shall include but is not limited to the specific requirements in this section for each device.
2. All test results shall confirm physical and performance compliance with this TSP.
3. Submit all test results documentation to the Engineer within fourteen (14) days of completion of the tests. The Engineer will review test documentation in accordance with the Submittal Review Process in Section 1.8.

12.6.2 Bench and Standalone Acceptance Test (SAT)

1. A bench test is required for this item. The Bench test shall demonstrate the configuration of the equipment will support the functionality of the system when installed in the field.
2. At the first location installed in the field Contractor shall demonstrate that the devices operates and is in full compliance with the above specification at the location of the equipment cabinet.
3. Perform an SAT on the first three installations installed in the field. At least one of these locations will be a stand alone CCTV with a Type B cabinet treatment.. The engineer shall be present during the test and at a minimum shall contain:

    A. Visual inspection of installation

B. Inspection of cabinet documentation

C. Functional test of all cabinet equipment, including circuit breaker, receptacles, fan and thermostat, and lights and door switches.

D. Measurement of DC power supply operating under full load.

6.4 Measurement

Cabinets will be measured in units of each and paid for at the contract price per each. The price bid shall include furnishing and installing the equipment cabinet and all related material and equipment specified in the Plans and this TSP, and all labor, system integration, testing, system documentation and miscellaneous materials necessary for a complete and accepted installation. The unit price shall also include but is not limited to the cabinet and all interior materials, mounting hardware foundations, external conduit entrances including conduit bodies and nipples, electrical service and pole grounding terminations. This price shall be full compensation for all labor, tools, materials, equipment and incidentals necessary to complete the work.

6.5 Payment

The contract unit price shall be full compensation for all work specified in this Section.

Payment will be made under:

Item No.	Description	Unit
725-10.12	Cabinet (Type B Pole Mounted)	EACH
725-10.13	Cabinet (Type B Base Mounted)	EACH
725-10.51	Cabinet (Type C Base Mounted)	EACH
725-10-41	Modify Cabinet (Integrate FO equipment)	EACH
725-10-42	Modify Cabinet (Modify/Replace conduit Elbow access)	EACH
725-10-43	Modify Cabinet (Electrical)	EACH

Equipment Cabinet will be paid per each as follows:

1) 40% of the contract unit price for delivery of the cabinet housings.

2) Additional 40% of the contract unit price for complete installation of equipment cabinet and all interior components, electrical service feed (activated), interior cabinet components, all conduit entrances, grounding connection, and testing.

3) Additional 10% of the contract unit price for completion of Stand Alone Site Test of all field devices housed or connected to the equipment cabinet.

4) Final 10% of the contract unit price upon Final System Acceptance.

SECTION 7
POLES

7.1 Description

This Section specifies the minimum requirements for equipment poles furnished and installed in accordance with this TSP and the Plans. This work shall consist of furnishing and installing fifty foot (50') galvanized steel camera poles with foundations in accordance with this TSP and the TDOT Standard Specifications for Road and Bridge Construction.

7.2 Materials

7.2.1 Galvanized Steel Poles

Fifty foot (50') CCTV pole and foundation, conduit, connections, clamps, anchor bolts, shoe bases and all other members shall be designed and fabricated in accordance with the Standards and requirements listed below. Design and materials documentation shall be furnished as part of the approval request submittal. Certifications will be furnished upon request by the Engineer.

1) 2001 AASHTO "Standard Specifications for Structural Supports for Highway Signs, Luminaries and Traffic Signals" including all interims and updates shall be met. Design life shall be fifty (50) years for all poles. The "Fatigue Category", "Galloping Loads" category and "Truck-Induced Gust Loads" do NOT apply to the poles.
2) Shall be designed to withstand the specified forces including those produced by a ninety (90) mph wind with a 1.14 gust effect factor.
3) The Contractor shall submit manufacturer's shop drawings, layout drawings and specifications for equipment and appurtenances for the approval of the Engineer ninety (90) days after notice to proceed.
4) Fabricator: The Fabricator shall be certified under Category I, "Conventional Steel Structures" as set forth by the American Institute of Steel Construction Quality Certification Program. Proof of this certification will be required.
5) Welding: All welding shall be in accordance with Sections 1 through 8 of the American Welding Society (AWS) DI.1 Structural Welding Code.
6) Tackers and welders shall be qualified in accordance with the American Welding Society Structural Welding code.
7) Tube longitudinal seam welds shall be free of cracks and excessive undercut, performed with automatic processes, and be visually inspected. Inspection records will be furnished to the Engineer.

8) Longitudinal welds suspected to contain defects shall be magnetic particle inspected. All circumferential butt welded pole and arm splices shall be ultrasonically and radio graphically inspected. Inspection records will be furnished to the Engineer.

9) Camera Pole System shall consist of a pole, anchor bolts, base plate, ground rod array, communication and power conduits to nearest pull box, grounding conduit, spare conduit and foundation as shown in plans.

10) Design computations for the camera poles shall be complete and shall include but not be limited to the following:

    A) Consideration for all parts of the structure

    B) Consideration for all possible loading combinations including wind and ice loads

    C) Design stresses and allowable stresses for all components which comprise the proposed structure

    D) The top of the pole deflection shall not exceed the following:

        i) 1 inch deflection from center (2 inch deflection diameter) due to 30 mph (non-gust) winds for the 50 foot poles.

    E) All complete shop drawings and design computations shall bear the stamp of a registered Professional Engineer.

    F) Shop drawings shall be approved prior to fabrication. Approval of the shop drawings does not relieve the Contractor of responsibility for the design, fabrication and erection of the structure.

    G) The Engineer reserves the right to reject a pole design if the calculated deflection exceeds that specified herein.

    H) The foundation design shall be based on actual soil conditions from soil borings conducted by the contractor. The cost of the soil borings shall be included in the cost of the pole.

11) The calculations shall include a pole, base plate, and anchor bolt analysis. The pole calculations shall be analyzed at the pole base, 5 foot pole intervals, and at each slip joint splice.

12) For each pole as shown in the plans, the following information shall be given:

    A) The pole's diameter, thickness, section modulus, moment of inertia, and cross sectional area.

    B) The centroid, weight, projected area, drag coefficient, velocity pressure, and wind force of each trapezoidal pole segment.

C) The axial force, shear force, primary moment, total moment, axial stress, bending stress, allowable axial stress, allowable bending stress, and combined stress ratio (CSR) at each elevation.

D) The pole's angular and linear deflection at each elevation.

13) Hand Holes:

A) The hand hole openings are reinforced with 2" wide hot rolled steel bar. The opening shall be rectangular and 5" x 8" nominal.

B) The cover shall be 11-gauge steel and shall be secured to a clip-on lock with a tamper-proof screw.

C) The reinforcing rim shall be provided with a ½" tapped hole and ½" hex head cap screw for grounding.

D) Handholes on poles with pole mounted cabinets and transformers shall be placed toward oncoming traffic. For all other poles handholes shall face away from traffic.

14) Pole Top Junction Box: All 50' camera poles shall have a pole top connector box fastened to the pole top for cable strain relief.

15) Cable Supports (J-Hooks & Eyelets): Top and bottom J-hooks and eyelets shall be located within the pole directly aligned with each other.

16) Base Plate:

A) Base plates shall conform to ASTM A572.

B) Plates shall be integrally welded to the tubes with a telescopic welded joint or a full penetration butt weld with backup bar.

C) Plates shall be hot dip galvanized.

17) Anchor Bolts:

A) Anchor bolts shall conform to the requirements of AASHTO M314-90 (105 ksi min. yield.) The upper 12" of the bolts shall be hot dip galvanized per ASTM A153.

B) Each anchor bolt shall be supplied with two (2) hex nuts and two (2) hardened washers.

C) The strength of the nuts shall equal or exceed the proof load of the bolts.

D) The top nut shall be torqued so as to produce 60% yield stress of anchor bolt.

E) The Contractor shall not grout between bottom of base plate and top of concrete foundation.

7.3 Installation Requirements

All equipment shall be installed according to the Manufacturer's recommendations and Plans. Materials and associated accessories/adapters shall not be applied contrary to the Manufacturer's recommendations and standard practices.

7.3.1 Poles

Standards and posts for the camera poles shall be installed as indicated on the Plans and shall conform to the following requirements:

1) All poles shall be installed in accordance with the National Electric Safety Code and ASSHTO.
2) Foundations:
    A) The Contractor shall submit a design for pole foundations that has been sealed by a registered Professional Engineer.
    B) The foundation design shall adhere to the prescribed loading and wind deflection as specified in TDOT Standards Specification.
    C) The foundations shall be constructed in accordance with the TDOT Standard Specifications and shall adhere to the approved shop drawings for the loading specified.
    D) If soil conditions require the use of any shoring, casings, or sonotube for proper installation of the foundations, the cost of the shoring, casings or sonotube shall be included in the cost of the pole and foundation.
3) The dimensions and reinforcing steel shall be in accordance with the requirements of the Plans and Specifications.
4) Cast-in-place Concrete Pole Foundation shall cure a minimum of twenty eight (28) days before any load is applied to the foundation. The Engineer may approve early installation of the pole based on the results of the seven (7) day test.
5) Conduit shall be installed in the pole foundation for access and includes conduit to the nearest pull box as shown in plans.
6) A minimum of one (1) two inch (2") spare conduit shall be installed in all pole foundations as shown in the Plans Typical Details. Spare conduits in pole foundations shall be sealed with blank duct plugs.
7) Grounding System
    A) The Contractor shall supply and install a grounding system with ground rod array at the base of all poles as shown on the Plans.
    B) The ground rod array system shall be connected to the pole through an appropriate ground clamp.

C) A #6 AWG copper stranded bonding wire shall be installed between the pole and the field cabinet providing a common ground system for each site.

D) All ground bonding wires shall be unspliced.

8) The installation method for the CCTV poles and cameras shall be such that the camera can be rotated as needed around the pole for optimum placement.

7.4 Measurement

7.4.1 CCTV Pole and Foundation (50' Pole Height)

CCTV Pole and Foundation will be measured in units of each and paid for at the contract price of each. The price bid shall include a fifty foot (50') steel strain pole, foundation, conduit inside foundation and to the nearest pull box, wiring between camera and field cabinet, connections to support structures, and satisfactory completion of testing and training requirements, and all work, equipment and appurtenances as required to effect the full operation including remote and local control of the CCTV site complete in place and ready for use. This price shall be full compensation for all labor, tools, materials, equipment and incidentals necessary to complete the work.

7.5 Payment

The contract unit price shall be full compensation for all work specified in this Section.

Payment will be made under:

Item No.	Description	Unit
725-10.22	CCTV Pole (50' Pole Height)	EACH

The CCTV Pole will be paid per each as follows:

1) 25% of the contract unit price upon complete installation of foundations.
2) Additional 45% of the contract unit price upon delivery of poles or structure to the site.
3) Final 30% of the contract unit price upon complete installation of poles or structure.

SECTION 8
CCTV CAMERA SYSTEM

8.1 Description

This Section specifies the minimum requirements for CCTV Camera Systems furnished and installed on this project.

The CCTV Camera System will provide TMC personnel with live full motion video of the roadway network via both CCTV tube and dome Camera Systems installed at locations shown in the Plans. The camera systems installed in the field will be managed and controlled by viewing and control video management software included in the cost of the CCTV camera system. This software shall also be provided and used during the installation and testing of the installed video equipment. The video management software and CCTV system shall be a fully integrated video solution, and act seamlessly between the CCTV camera in the field and the TMC workstation running the manufacturer software over the Johnson City fiber network. Workstations and servers provided by the Contractor shall be made available in the TMC prior to necessary CCTV testing as outlined in this Special Provision.

8.2 Materials

All materials furnished, assembled, fabricated or installed shall be new, corrosion resistant and in strict accordance with all of the details shown in the Plans and described in this specification.

The CCTV Camera System shall comply with the following minimum materials specifications:

8.2.1 General Capabilities and Performance Requirements

Overall CCTV Camera System capabilities and performance requirements include the following:

1) CCTV Cameras shall be placed at fixed locations as shown on the Plans to provide coverage within the project limits including the mainline and side street travel lanes and shoulders.

2) The CCTV Camera System components shall be compatible with each other and be of rugged design and suitable for reliable operation when mounted in the configuration as specified in this TSP and the Plans.

3) The CCTV Camera System shall be capable of attended and unattended, continuous 24 hours per day operation, in all weather conditions, at the sites as shown on the Plans.

4) Ensure that the installed equipment provides unobstructed video of the roadway, traffic, and other current conditions around a roadside CCTV field

site; that it responds to camera control signals from an operator of the system; and that the video images can be transmitted to remote locations interfaced to the system for observation.

5) The camera shall be fully compliant with all aspects of the National Television Standards Committee (NTSC) specification, and produce NTSC compatible video. This will only apply if the Contractor elects to provide a nonintegrated analog camera system with external encoder, as stated in paragraph 8.4.2 below.

6) Operate over wide dynamic light conditions ranging from low light/dusk to full sunlight having day (color)/night (monochrome) switchover and iris control, with user-selectable manual and automatic control capabilities.

7) Capable of being remotely controlled and programmed via the supplied CCTV manufacturer software, as well as by other central software.

8) Provide a pressurized integrated optic cartridge (IOC) for environmental protection.

9) Camera shall be mounted together with the zoom lens and integrated into the pan and tilt device within the enclosure forming a totally integrated, easily removable assembly.

10) Camera shall include a high quality integrated camera/lens combination.

11) Shall be equipped with an auto-iris lens capability compatible with the zoom lens supplied.

12) Iris capability shall include a provision for manual override via software.

13) Capable of auto-focus during zoom-in or zoom-out, with provisions for override via software.

14) Provide overexposure protection - the camera shall not be degraded or damaged under normal reasonable operating conditions.

15) Provide capability for local control of pan, tilt and zoom functions at the roadside cabinet using vendor-supplied software installed on a laptop computer.

16) CCTV cameras shall support the NTCIP 1205 v1.08 communication protocol, unless otherwise approved by the Engineer.

8.3 Camera Unit Type - Tube

8.3.1 Camera Module

1) Image Size: ¼” Format 3.6mm (H) x 2.7mm (V)

2) Image Resolution: 540 horizontal; 350 vertical or better

3) Picture Elements Not less than 811 (H) x 508 (V)

4) Video Output: NTSC, 1 V p-p @ 75 ohms, unbalanced or 16 Bit Digital YUV: 4.2.0 if integrated H.264 engine is provided
5) Maximum Lens Aperture: Not less than f/1.4 (wide) to f/4.2 (tele)
6) Optical Zoom Range: Not less than 35X, 3.4mm to 119mm
7) Digital Zoom Range: 1X (Off) through 10X, Smooth transition from Optical to Digital Zoom
8) Effective Digital Focal Length: not less than 119mm to 1190mm
9) Optical Zoom Speed: Two speeds, from approximately not more than 3.2 seconds to 6.6 seconds full range
10) Minimum Focus Distance: Equal too or less than 40" in tele, 0.4" in wide angle.
11) Electronic Stabilization: selectable stabilization method
12) Auto Focus: Selectable Auto/Manual
13) Manual Focus Speed: Less than 2.0 seconds to full range.
14) Manual Shutter: Selectable shutter speeds
15) Auto Iris; Iris shall automatically adjust to compensate for changes in scene illumination to maintain constant video level output within sensitivity specifications.
16) Color Balance: Auto Tracking Color balance/Manual with adjustable Red and Blue Levels
17) Signal to Noise Ratio: >50 dB
18) Sensitivity: Scene Illumination @ F1.4 equal to or greater than:
    a) 1.0 Lux @ 1/60 shutter, color mode
    b) 0.1 Lux @ ¼ shutter, color mode
    c) 0.01 Lux @ ¼ shutter, mono mode

8.3.2 H.264/MJPEG Encoding Engine

The Camera Positioning System (CPS) shall fully integrate within its positioning system enclosure an H.264/MJPEG encoding component with functions as specified below. The Contractor may submit a nonintegrated solution installed in the traffic control cabinet or separate CCTV cabinet if it provides the same capabilities and is hardened for extreme temperatures.

1. Video Encoding: H.264 (Main Profile/Level 3.1) and MJPEG standards
2. Video Streams: Two independently configurable streams; (1) H.264 and (1) MJPEG

3. Video Stream Configuration Properties;
   a. Stream Settings
      1. Video Stream 1: H.264
      2. Video Stream 2: MJPEG
   b. Image Resolution: Not less than 720p, D1, VGA, CIF
   d. Streaming Mode: Capable of selectable CBR or VBR
   e. Image Settings: (GOP (M, N)), Quality Value
   f. Frame Rates: 30, 15, 7, 4, 2, 1
5. Data Rate: Adjustable in a range of not less than 64k to 12Mb/sec
4. Connection Types: Uni-cast, multi-Unicast or multi-cast
5. Positioning system video latency: <250ms (Does not include network latency)
6. Network Protocol Layers: RTP, RTSP, UDP, TCP, IP, HTTP, IGMPv2, ICMP, and ARP as a minimum

8.3.3 Position Drive

1) Pan Movement; 360 degrees continuous rotation
2) Pan Speed; Variable from 0.25 to >80 degrees/second.
3) Pan Repeatability; +/- 0.25 degree precision
4) Pan Preset Speed; >100 degrees/sec
5) Tilt Movement; Minimum of +90 to –90 degrees (straight up to straight down)
6) Tilt Speed; Variable from 0.25 to >40 degrees/second.
7) Tilt Repeatability; +/- 0.25 degree precision
8) Tilt Preset Speed; >140 degrees/sec
9) Pan/Tilt Modes; The CPS shall provide selectable modes of operation for user control flexibility:
10) Variable Proportional; Allows variable pan/tilt speed based on zoom position. This shall scale the maximum pan/tilt speed, while maintaining variable speed capability, throughout the zoom range of the camera.
11) Proportional; Allows variable speed pan/tilt control based on pan/tilt joystick deflection without factoring zoom position
12) Fixed; Allows scaled fixed speed pan/tilt control based on level of zoom depth

8.3.4 Operational

1) Presets; Minimum of 64, with each preset consisting of a pan, tilt, zoom and focus coordinate.
2) Video Freeze between presets; Allow selection of freeze or live video during preset movements.
3) Preset Tours; Minimum 8 tours required, each tour shall consist of up to 32 pre-programmed presets, with individual dwell time property per preset per tour.
4) Tour presets shall be useable in any order
5) Presets may be used multiple times in tour
6) Tours shall stop upon receipt of any pan/tilt positioning command.
7) Tour data shall be stored in non-volatile memory and shall not be lost if a power failure occurs.
8) Sector Zones; Provide a minimum of up to 16 user defined sector zones with each zone having a unique 24 character ASCII title programmed for description purposes.
9) Privacy Zones; Provide a minimum of up to 8 user defined privacy zones with each zone having a unique 24 character ASCII title programmed for description purposes.
10) Camera Site ID: Provide up to 2 lines of up to 24 ASCII characters each on video for user site description ID. If both lines are programmed, line 1 of ID shall always appear above line 2 regardless of top or bottom selection
11) Preset ID: Provide 1 line of up to 24 ASCII characters on video for Preset ID description. When a preset position is recalled the corresponding preset ID shall be displayed. The preset ID shall remain displayed until a pan, tilt, zoom, manual focus, auto focus select, or another preset command is received.
12) Compass/Direction ID; Provide ID on video for indication of viewing direction. User definable settings shall include;
13) 8 point or 16 point compass annotation from defined true north position.
14) 1. Display shall include North, NE, East, SE, South, SW, West, and NW.
15) ID position shall grouped with the site location ID or separate from site location ID.
16) Provide for selectable 3-second time out or permanent display with global enable/disable setting of ID
17) Azimuth and Elevation ID: Provide ID on video for indication of absolute position of DPS positioning drive.

18) Position ID shall be displayed in 0 - 359 degrees for AZ position and +90 to – 90 in EL elevation.
19) Provide for selectable 3-second time out or permanent display with global enable/disable setting of ID
20) Low Pressure Indicator: Provide "Low Pressure" ID message on video for indication insufficient pressure in DPS.
21) Message can be displayed in "blinking" or "non-blinking" mode
22) Message shall be enabled or disabled by user
23) Provide user threshold set points for variations in altitudes.
24) Internal Temperature Indicator:
25) Scalable Zoom; Variable speed pan/tilt ranges based off of zoom position.
26) Flash Memory: To update firmware
27) Video; Provide for one analog 1 Vp-p unbalanced 75-ohm video output, or H.264 internally encoded video that can be displayed locally at the CCTV cabinet.
28) Control Data; Provide one (1) half duplex 4-wire RS422 channel for setup and system camera control functions, or RJ45 Ethernet connection.
29) Protocol; The CPS shall adhere to NTCIP commands, unless otherwise approved by the Engineer
30) Transients; Provide minimum of two levels of protection with use of Transorbs and opto-isolated data transmission circuits, or approved equivalent.

8.3.5 Power Input

1) The CPS system shall fully comply with and include independent laboratory test results confirming compliance with the following electrical operating conditions;
2) Power; <100 Watts Maximum
3) Operating Voltage; Per NEMA-TS2 para 2.1.2 and 2.1.3, 89 to 135Vac +/-3hz
4) Power Interruption; Per Nema-TS2 para 2.1.4
5) Transients; Per Nema-TS2 para 2.1.6

8.3.6 Mechanical

1) Connectors; weatherproof non-corrosion type
2) Weight; Maximum 18.5lbs
3) Construction; Light colored, Powder Coated aluminum; all internal and external parts corrosion protected, stainless steel fasteners, and optically perfect flat glass lens seals on camera housing.
4) Camera Mount; Mounting holes at bottom of camera module or similar connectivity. Pigtail cable connector (minimum 24") from camera module.
5) A camera module sun shield extension must be included to protect the camera from sun and rain.

8.3.7 Environmental

1) The CPS system shall fully comply with and include independent laboratory test results confirming compliance with the following environmental operating conditions;
2) Temperature; Per Nema-TS2 para 2.1.5, -34C to 74C tested across low and high voltage ranges per Nema-TS2 para 2.1.2 and 2.1.3.
3) Vibration; Per Nema-TS2 para 2.1.9, 2.2.3, 5-30Hz sweep @ 0.5g applied in each of 3 mutually perpendicular planes.
4) Shock; Per Nema-TS2 para 2.1.10, 2.2.4, 10g applied in each of 3 mutually perpendicular planes.
5) Water Spray; Per IEC 60529+A1, 1999, Para 14.2.6, Solid water stream delivered thru 12.5mm nozzle @ 25 gallons/minute @ 9ft for 3 minutes
6) External Icing; Per Nema-TS2 250-2003, para. 5.6
7) Corrosion Protection; Per NEMA 250-2003, para 5.10
8) Humidity; 0-100% N.C per MIL-E-5400T, para 3.2.24.4
9) Standards; IP66, IP67, ASTM-B117 Marine

8.4 Camera Type - Dome

8.4.1 Camera Module

1) Image Size: Diagonal 6mm (1/3" type)
2) Image Resolution: Not less than 1280 horizontal; 720 vertical
3) Picture Elements (total)Not les than 1348 (H) x 976 (V)
4) Video Output: 16 Bit Digital YUV: 4.2.0

5) Day/Night Operation: Adjustable (Auto, Color and Mono Modes) via removable IR cut filter
6) Maximum Lens Aperture: Not less than f/1.6 (wide) to f/2.8 (tele)
7) Optical Zoom Range: Not less than 18X, 4.7mm to 84.6mm
8) Optical Zoom Speed: Two speeds
9) Horizontal Angle of View: Optical: Not less than 55.2° to 3.2
10) Minimum Focus Distance: Not greater than 0.01m (w); 1.0m (t)
11) Auto Focus: Selectable Auto/Manual; Minimum Scene Illumination for Reliable Auto Focus shall be no more than 50% video output.
12) Manual Shutter: Selectable
13) Auto Iris; Selectable auto/manual; Iris shall automatically adjust to compensate for changes in scene illumination to maintain constant video level output within sensitivity specifications.
14) Sensitivity: Scene Illumination minimums ; F1.6 @ 50% Video
    a) 1.8 Lux (0.18 fc) @ 1/30 shutter, color mode
    b) 0.1 Lux (0.01 fc) @ 1/30 shutter, mono mode

8.4.2 H.264/MJPEG Encoding Engine

The IP Camera Positioning System (IPCPS) system shall fully integrate within its positioning system enclosure an H.264/MJPEG encoding component with functions as specified below. The Contractor may submit a nonintegrated solution installed in the traffic control cabinet or separate CCTV cabinet if it provides the same capabilities and is hardened for extreme temperatures.

1. Video Encoding: H.264 (Main Profile/Level 3.1) and MJPEG standards
2. Video Streams: Two independently configurable streams; (1) H.264 and (1) MJPEG
3. Video Stream Configuration Properties;
    a. Stream Settings
        1. Video Stream 1: H.264
        2. Video Stream 2: MJPEG
    b. Image Resolution: Not less than 720p, D1, VGA, CIF
    d. Streaming Mode: Capable of selectable CBR or VBR

e. Image Settings: (GOP (M, N)), Quality Value

f. Frame Rates: 30, 15, 7, 4, 2, 1

5. Data Rate: Adjustable in a range of not less than 64k to 12Mb/sec

4. Connection Types: Uni-cast, multi-Unicast or multi-cast

5. IPCPS Video Latency: <150ms

6. Network Protocol Layers: RTP, RTSP, UDP, TCP, IP, HTTP, IGMPv2, ICMP, and ARP as a minimum

8.4.3 Positioning Drive

1. Pan Movement; 360 degrees continuous rotation
2. Pan Speed; Variable from 0.1 to 80 degrees/second or better.
3. Pan Repeatability; +/- 0.25 degree precision or better
4. Pan Preset Speed; 180 degree movement < 2 Seconds
5. Tilt Movement; Minimum of +90 to –90 degrees
6. Tilt Speed; Variable from 0.1 to 40 degrees/second or better.
7. Tilt Repeatability; +/- 0.25 degree precision
8. Tilt Preset Speed; 180 degree movement < 2.5 Seconds or better
9. Pan/Tilt Modes; The DPS shall provide selectable modes of operation for user control flexibility:
   a. Variable Proportional;
   b. Proportional;
   c. Fixed; Allows scaled fixed speed pan/tilt control based on level of zoom depth

8.4.4 Operational

1. Presets; Minimum of 64, with each preset consisting of a pan, tilt, zoom and focus coordinate.
   a. Video Freeze between presets; Allow selection of freeze or live video during preset movements.
2. Preset Tours; Minimum 8 tours required, each tour shall consist of up to 32 pre-programmed presets, with individual dwell time property per preset per tour.
   a. Tour presets shall be useable in any order
   b. Presets may be used multiple times in tour
   c. Tours shall stop upon receipt of any pan/tilt positioning command.
   d. Tour data shall be stored in non-volatile memory and shall not be lost if a power failure occurs.
3. Sector Zones; Provide a minimum of up to 16 user defined sector zones with each zone having a unique 24 character ASCII title programmed for description purposes.

5. Camera Site ID: Provide up to 2 lines of up to 24 ASCII characters each on video for user site description ID. If both lines are programmed, line 1 of ID shall always appear above line 2 regardless of top or bottom selection

6. Preset ID: Provide 1 line of up to 24 ASCII characters on video for Preset ID description. When a preset position is recalled the corresponding preset ID shall be displayed. The preset ID shall remain displayed until a pan, tilt, zoom, manual focus, auto focus select, or another preset command is received.

7. Compass/Direction ID; Provide ID on video for indication of viewing direction. User definable settings shall include;

   a. 8 point or 16 point compass annotation from defined true north position.

      1. Display shall include North, NE, East, SE, South, SW, West, and NW.

   b. ID position shall group with the site location ID or separate from site location ID.

   c. Provide for selectable 3-second time out or permanent display with global enable/disable setting of ID

8 Azimuth and Elevation ID: Provide ID on video for indication of absolute position of DPS positioning drive.

   a. Position ID shall be displayed in 0 - 359 degrees for AZ position and +5 to –90 in EL elevation.

   b. Provide for selectable 3-second time out or permanent display with global enable/disable setting of ID

11. Scalable Zoom; Variable speed pan/tilt ranges based off of zoom position. This adds the capability of limiting the maximum pan/tilt speed, while maintaining variable speed capability, throughout the zoom range of the camera.

13. Updates: The IPCPS shall allow updates of firmware for new features via the Ethernet network communication channel. An internal IPCPS web server shall be provided for performing this task.

14. The IPCPS system shall return to previous position and state of operation upon power loss and restoration.

8.4.5 IP Management

The IPCPS shall provide at minimum the following network configuration properties;

1. IP Configuration: DHCP or Static IP address entry
2. Net mask address entry
3. Gateway address entry

8.4.6 4. Power Input

The IPCPS system shall fully comply with and include independent laboratory test results confirming compliance with the following electrical operating conditions;

1. Power; <100 Watts Maximum
2. Operating Voltage; 89 to 135Vac +/-3hz, Per NEMA-TS2 para 2.1.2 and 2.1.3

8.4.7 Mechanical

1. Connectors weatherproof non-corrosion type
2. Weight; Maximum 25lbs
3. Construction; Light Colored Powder Coated aluminum; all internal and external parts corrosion protected, stainless steel fasteners. Faceplate shall be optically correct glass.
5. Camera Mount; Provided to match pole locations on plans. See plans for variable types of poles.

8.4.8 Environmental

The IPCPS system shall fully comply with and include independent laboratory test results confirming compliance with the following environmental operating conditions;

1. Temperature; -34C to 74C tested across low and high voltage ranges per Nema-TS2 paragraphs 2.1.2 and 2.1.3.
2. Vibration; Per Nema-TS2 paragraphs 2.1.9, 2.2.3, 5-30Hz sweep @ 0.5g applied in each of 3 mutually perpendicular planes.
3. Shock; Per Nema-TS2 paragraphs 2.1.10, 2.2.4, 10g applied in each of 3 mutually perpendicular planes.
4. Water Spray; Per IEC 60529+A1, 1999, Para 14.2.6, Solid water stream delivered thru 12.5mm nozzle @ 25 gallons/minute @ 9ft for 3 minutes

5. External Icing; Per Nema-TS2 250-2003, paragraphs 5.6
6. Corrosion Protection; Per NEMA 250-2003, paragraphs 5.10
7. Humidity; 0-100% NC per MIL-E-5400T, paragraphs 3.2.24.4
8. Standards; IP66, IP67, ASTM-B117 Marine

8.4.9 Certifications

1. Safety; CE (24Vac)
2. Emissions; FCC Class A

8.5 Surge Protection

All CCTV Camera System electrical interconnects shall be protected from voltage surges caused by lightning and external electromagnetic fields. The minimum surge protection requirements include:

1) Surge protectors shall be furnished for all non-dielectric cable and conductors (video, data/signal, and device/assembly power, as necessary) between the CCTV Camera System and the equipment cabinet.
2) The surge protectors shall have leads that are kept to a minimum length as recommended by the surge device manufacturer.
3) All surge protection devices shall be designed to meet the temperature and humidity requirements expected in this type of outdoor application.
4) All Surge protectors shall be U.L. listed (UL 1449, UL 497, 497A, 497B, etc., as appropriate) and bonded to the same single-point ground point.
5) Coaxial Cable Surge protectors for coaxial cable shall meet / provide the following functionality, as necessary:
   a) Attenuation: 0.1dB @10 MHz, typical
   b) Input/Output Impedance: 75 ohms nominal
   c) Operating Voltage of the surge protector shall match characteristics of the ITS device/assembly.
   d) Peak Surge Current: 5,000-amperes for an 8 x 20 microsecond waveform
   e) Response Time: 1 nanosecond or less
6) Low Voltage / Signal Cable Surge protectors for data/signal/control cable shall meet /provide the following functionality:
   a) Peak Surge Current: 10,000-amperes for an 8 x 20 microsecond waveform
   b) Response Time: 1 nanosecond or less

c) Life Expectancy: Capable of surviving at a minimum of 25 occurrences at 2000-amperes

7) CCTV power surge protectors for power from equipment cabinet power distribution to the CCTV Camera System shall meet/provide the following functionality:

a) Frequency: DC to 10MHz

b) Clamping Voltage: < 30VAC (rms) or 42VDC

c) Insertion Loss: < 0.2dB

d) Input/Output Impedance: 75 ohms, typical

e) Peak Surge Current: 3000-amperes

f) Response Time: 1 nanosecond or less

8.6 Video Management Software

The CCTV camera system shall be centrally controlled by a Contractor provided video management software. The software shall be provided with the CCTV camera system and be included in the cost of the CCTV cameras. The software shall give central TMC viewing and control capabilities to operators at the Traffic Management Center. This software shall adhere to the following capabilities:

1) Shall be able to be installed on both Windows 64-bit XP and Windows 7 pc operating systems, supplied by the Contractor

2) Shall be configured to list all CCTV cameras in a client software, by intersection, through a database configuration software, as part of this project, and be expandable to a minimum of 500 IP CCTV cameras

3) Shall allow the operator to drag and drop a listed camera onto a video grid. The video grid shall be able to display a minimum of 4 video streams at any one time

4) The client user shall be able to select one of the cameras in the video grid and perform pan, tilt and zoom operation with the client software, as well as selecting and toggling presets, focus, and iris.

5) The client shall be able decode multiple streams of the same video

6) The client shall be compatible, and not interfere with the video wall display and control solution provided under this contract

7) The Software must be compatible with all cameras, control and video stream protocols provided under this contract.

8.7 Installation Requirements

All equipment shall be installed according to the manufacturer's recommendations, the Plans and as follows:

1) Materials and associated accessories/adapters shall not be applied contrary to the manufacturer's recommendations and standard practices.
2) Shall include all materials needed to permanently mount the CCTV camera to the support structure as indicated in the plans, including all non-corrosive stainless steel hardware.
3) Furnish and install all required power, video, surge protection devices and data cables, and any and all ancillary equipment required to provide a complete and fully operational CCTV system site. Cabling will not be paid separately but included in the cost of the camera with lengths as needed for routing in the design plans
4) Verify all wiring meets NEC requirements where applicable.
5) Cameras shall be mounted in positions which allow 360 degree continuous rotation.
6) Cameras shall be tested and configured at the site prior to Conditional Acceptance Testing to verify local operation

8.8 Measurement

CCTV Camera System will be measured in units of each and paid for at the contract price per each. The price bid shall include furnishing, installing, system integration, training, documentation, and testing of a complete CCTV Camera System and video management software. The CCTV camera assembly shall include but not be limited to the CCTV Camera, PT unit, zoom lens, enclosure, camera controller/receiver, coaxial cable (as necessary), outdoor rated category 5e cable, control/signal cable (as necessary), power cable, surge suppressors and conduit between the camera and the cabinet. The installation shall include connections to support structures, attachment hardware and brackets necessary for the mounts and conduit. This measurement shall include satisfactory completion of all testing requirements and all work, equipment and appurtenances as required for a fully functioning CCTV Camera System. The price bid shall also include all central system video management software and software configuration, system documentation including: shop drawings, operations and maintenance manuals, wiring diagrams, block diagrams and other materials necessary to document the operation of the CCTV Camera System. This price shall be full compensation for all labor, tools, materials, software, equipment and incidentals necessary to complete the work.

8.9 Payment

The contract unit price shall be full compensation for all the work specified in this Section.

Payment will be made under:

Item No.	Description	Unit
725-10.10	CCTV Camera System (Tube)	EACH
725-10.11	CCTV Camera System (Dome)	EACH

The CCTV Camera System will be paid per each as follows:

1) 50% of the contract unit price upon approval of installation of the CCTV camera on the pole and providing the Bench Test System results.
2) Additional 40% of the contract unit price upon approval of Conditional System Acceptance Test results and installation of the video management software
3) Final 10% of the contract unit price upon Final System Acceptance.

SECTION 9
NETWORK SWITCHES

9.1 Description

This section specifies the minimum requirements for network switches furnished and installed on this project.

9.2 Materials

9.2.1 Type A Network Switches

Type A Network Switches will be placed in the field device cabinets and shall meet the following requirements:

1) Minimum of eight (8) 10/100 Base-TX ports. Each port shall connect via RJ-45 connector.
2) Minimum of two (2) 1000 Base Long Reach SFP ports with the following optical requirements:
   A) The minimum optical budget between transmit and received ports shall be 23dB.
   B) GBIC shall include SX, LX, and ZX 1000Base Options. Contractor to size and provide the appropriate optics with each switch for each field site.
   C) Optical receiver maximum input power level shall not be exceeded. Optical attenuators shall be added as needed; fiber optic attenuator patch cords shall be in accordance with Section 4 of this TSP. It is the Contractor's responsibility to determine where attenuators are needed and shall be included in the cost of the switch.
   D) Each port shall connect via duplex small form-factor pluggable connectors.
3) Rack, shelf or DIN rail mountable. If shelf mounted, the Contractor must furnish and install the shelf. The shelf shall be ventilated as per the Network Switch manufacturer recommendation.
4) Operate between -34 to +74 degree Celsius, including power supply.
5) Operate from 100 VAC to 200 VAC.
6) Operate from 10% to 90% non-condensing humidity
7) Meet the IEEE 802.3 (10Mbps Ethernet) standard.

8) Meet the IEEE 802.3u (Fast Ethernet 100 Mbps) standard.

9) Meet the IEEE 802.3x (Full Duplex with Flow Control) standard.

10) Meet the IEEE 802.1p (Priority Queuing) standard.

11) Meet the IEEE 802.1Q (VLAN) standard per port for up to four (4) VLAN's.

12) The switch shall meet the IEEE 802.1D (Spanning Tree Protocol) and IEEE 802.1w (Rapid Spanning Tree Protocol) standards.

13) Meet the IEEE 802.3ad (Port Trunking) standard for a minimum of two (2) groups of four (4) ports.

14) Capable of mirroring any port to any other port within the switch.

15) Password manageable through:

    A) SNMP

    B) Telnet/CLI

    C) HTTP (Embedded Web Server) with Secure Sockets Layer (SSL)

16) Full implementation of SNMPv1 and SNMPv2c.

17) Full implementation of GVRP (Generic VLAN Registration Protocol).

18) Full implementation of IGMP and IGMP snooping.

19) Minimum MTBF of 100,000 hrs using Bellcore TS-332 standard.

20) Full implementation of RFC 783 (TFTP) to allow remote firmware upgrades.

21) UL approved

22) All power transformers provided shall be "fastening mechanism" type. No plug-in types shall be permitted. All corded transformers shall be mountable with the ability to neatly secure power cords.

23) The field switch shall provide status indicators as follows: 1) power on and off, 2) network status per port (transmit, receive, link, speed), and 3) status indicators shall be LED.

24) Unused ports (copper and optical) shall be covered with rubber or plastic dust caps/cover.

9.2.2 Type B Network Switch General Requirements

The Type B Network Switches will be installed in the Roadside Communication Hubs.

The Type B Network Switches shall meet the following requirements:

1) Type B switch shall have twelve (12) 1000BaseX fiber optical ports + one (1) 10/100/1000BaseTX port. All fiber optic link ports shall be capable of Multimode or Single mode via SFP. Single mode optics should support distances up to 70km. The switch shall support the following requirements and options:

   A) 1000BaseX fiber optical ports: single mode and multimode via LC connectors. Contractor to size and provide the appropriate optics with each switch for each hub site.

   B) Optical, 1310 nm single-mode,1550nm single-mode

   C) Supports Fiber Type: 9/125 um single-mode fiber

   D) Optical Budget single-mode fiber: minimum 17 dB @ 1310 nm

   E) Optical Budget single-mode fiber: minimum 25 dB @ 1550 nm

   F) IEEE 802.3z-1000BaseLX

   G) Full Duplex operation (IEEE 802.3x)

   H) Ports shall be installed as 2 port modules.

   I) Fully integrated dual redundant power supplies

   J) 19" rack mountable.

   K) Operate between -34 to +74 degree Celsius, including power supply.

   L) Operate from 100 VAC to 200 VAC.

   M) Operate from 10% to 90% non-condensing humidity

   N) SNMP v1, v2c, v3

   O) Telnet VT100

   P) NEMA TS2 Compliance

   Q) Meet the IEEE 802.1Q (VLAN) standard per port for up to four VLAN's.

   R) The switch shall meet the IEEE 802.1D (Spanning Tree Protocol) and IEEE 802.1w (Rapid Spanning Tree Protocol) standards.

   S) Meet the IEEE 802.3ad (Port Trunking) standard for a minimum of two (2) groups of four (4) ports.

   T) Capable of mirroring any port to any other port within the switch.

   U) Password manageable through:

      1) SNMP

2) Telnet/CLI

3) HTTP (Embedded Web Server) with Secure Sockets Layer (SSL)

V) Full implementation of SNMPv1 and SNMPv2c.

W) Full implementation of GVRP (Generic VLAN Registration Protocol).

X) Full implementation of IGMP and IGMP snooping.

Y) Minimum MTBF of 100,000 hrs using Bellcore TS-332 standard.

Z) Full implementation of RFC 783 (TFTP) to allow remote firmware upgrades.

AA) UL approved

9.2.3 Cat 6 Patch Cords

The Cat 6 Patch Cords shall be furnished and installed as needed to connect the Network Switches with other equipment. Cat 6 Patch Cords shall be considered an incidental component for this project and furnished and installed as needed to provide a functional system. Cat 6 Patch Cords shall meet the following minimum requirements:

1) All patch cords shall be from the same manufacturer.
2) Shall incorporate four (4) pair 24 AWG stranded PVC Category 6.
3) Shall be factory made with factory installed RJ45 connectors; contractor or vendor assembled patch cords are not permitted.
4) Shall be TIA/EIA 568-B.2-1 compliant. Patch Cords shall be compliant to T568B pin configuration (which ever is used).
5) Certified by the manufacturer for Category 6 performance criteria.
6) Length as needed. Excessive slack is not permitted.

9.2.4 Project Submittal Program Requirements

1) General Requirements

A) The Contractor shall provide project submittals for network switches as required in Section 1.8 of this TSP, including scheduling requirements. The project submittals for network switches shall include but are not limited to the additional specific requirements in this subsection.

B) Submit documentation and proof of manufacturer-recommended training and certification for the installation and configuration of network switches as required in Section 9.3.1.

C) Submit technical specifications for the minimum transmitter port to receiver port optical attenuation required for the switches to function in accordance with this TSP for the following optical links:

1) Type A switch GBIC port to Type A switch GBIC port
2) Type A switch GBIC port to Type B switch GBIC port
3) Type B switch GBIC to Type B switch GBIC

9.3 Installation Requirements

9.3.1 General

The contractor shall follow the following installation requirements:

1) Network switches Type A shall only be configured and installed by the switch manufacturer trained personnel. Network switches Types B shall only be installed and configured by the switch manufacturer certified personnel.
2) Network switches shall be installed in accordance with manufacturer's guidelines and requirements.
3) The Contractor shall request from the City of Johnson City Information Technology Services, switch configuration information (such as IP address, VLAN Tag values, etc) not more than 30 days after the switch cut-sheets have been approved.
4) The Contractor shall provide as needed the necessary Cat 6 patch cords and fiber optic patch cords for a complete and functional installation.
5) The Contractor shall provide training for proper management of the equipment installed. This training should cover daily operation as well as maintenance and configuration of the switching equipment installed as part of this project.

9.3.2 Testing

1) General Requirements

A) The Contractor shall conduct a project testing program for all network switches as required in Section 1.5 of this TSP. The project testing program for network switches shall include but is

not limited to the additional specific requirements in this subsection.

B) All test results shall confirm physical and performance compliance with this TSP.

C) Submit all test results documentation to the Engineer within fourteen (14) days of completion of the tests. The Engineer will review test documentation in accordance with the Submittal Review Process in Section 1.8.

2) Bench Test System (BTS)

A) The Contractor shall perform BTS on the Network subsystem. The test shall demonstrate that Network Switches Type A, and B are configured as required under Section 9.3.3 Switch Configuration Requirements.

B) All other configuration settings as required to meet the project requirements including performance.

C) Communication redundancy at Layer 2 and Layer 3.

3) Conditional Acceptance Test

A) The Contractor shall, during the CAT demonstrate that each switch has been configured as required under Section 9.3.3 Switch Configuration Requirements and all other settings as required to meet the project requirements including performance.

9.3.3 Switch Configuration Requirements

1) The Contractor shall configure Network Switch Type A, and B as follows. The Contractor may submit an alternate switch configuration to the Engineer for review and approval; the Engineer will review alternate switch configuration documentation in accordance with the Submittal Review Process in Section 1.8. The goal of the switch configuration is to reduce the network delay, as well as provide network redundancy at the Layer 2 and Layer 3 levels.

2) Configuration Requirements for Network Switch Type A:

A) All 1000 Base-TX ports shall be configured as follows:

1) RSTP/STP – Off when applied to a host connection

2) Unused TX ports shall be disabled

3) Operating TX ports shall be programmed to filter only for the MAC address of the connected device

B) All 1000 Base SFP GBIC ports as sized by the Contractor for appropriate optical lengths shall be configured as follows:

1) RSTP/STP – On

2) IGMP Snooping – On

C) All Type A network switches shall be installed and configured with the same firmware configuration. The optimum settings shall be used consistently system-wide. Any locations that require different settings for optimum performance shall be approved by the Engineer.

3) Configuration Requirements for Network Type B:

A) Shall be configured for redundant L3 routing using OSPF protocols.

B) Shall be configured with IGMP on for subnets incorporating Type A switches.

C) Shall be configured for redundant L3 Multicast routing by using PIM protocols.

D) Shall be configured as gateways for the Type A switches.

E) Shall provide gateway redundancy for Type A switches by implementing the HSRP protocol.

F) Type B switches shall be configured to take advantage of the multiple fiber rings among Type A, B switches to overcome any single switch failure or cable cut in the system.

9.4 Measurement

Network Switches will be measured in units of each and paid for at the contract price per each. The price bid shall include furnishing, installing, system integration and testing of a Network Switch including all chassis, modules, power cables, power supplies, optics, software, license, fiber optic patch cords, fiber optic attenuator patch cords, Cat 6 patch cords, media converters (if needed), and all incidental components, attachment hardware, mounting shelf and hardware, testing and training requirements, and all work, equipment and appurtenances as required to provide a fully functional switch ready for use. The price bid shall also include all system documentation including: shop drawings, operations and maintenance manuals, wiring diagrams, block diagrams, and other material necessary to document the operation of the switch and network. This price shall be full compensation for all labor, tools, materials, equipment, and incidentals necessary to complete the work.

9.5 Payment

The contract unit price shall be full compensation for all work specified in this Section.

Payment will be made under:

Item No.	Description	Unit
725-07.08	Network Switch (Type A)	EACH
725-07.09	Network Switch (Type B)	EACH

Network Switch will be paid per each as follows:

1) 50% of the contract unit price upon satisfactory installation and Bench Test Component, Bench Test System and Pre-installation test results.
2) Additional 40% of the contract unit price upon satisfactory Conditional System Acceptance test.
3) Final 10% of the contract unit price upon Final System Acceptance, which includes delivery of training, all documentation and documentation of warranties for all equipment.

SECTION 10
ELECTRICAL EQUIPMENT

10.1 Description

This Section describes the minimum requirements for the electrical services to be furnished and installed on this project. The work required includes all materials, labor, coordination, auxiliaries and incidentals necessary to furnish, install, and test a complete electrical service as indicated on drawings and as specified in this Section.

The electrical service will provide power to the devices installed as part of this project including, but not limited to, CCTVs and communications hubs.

10.2 Material

10.2.1 Demarcation Points for Electrical Service (Meter Base)

1) Demarcation points for power service installations shall include a service power meter base, fusible disconnect switch, wire, conduit and appurtenances, wire splices, and all labor materials associated with the installation of these devices except as approved by the Engineer. Where multiple power circuits are originating from the same demarcation point, the demarcation point shall include all equipment needed for all circuits. See Plans for Detail
2) All demarcation point conduit shall be Rigid Galvanized Steel RGS.
3) The conduit for the ground mounted service points includes all conduit from the Main Disconnect to nearest pull box underground in both directions.

10.2.2 Electrical Cable

1) Electrical cable shall be THHN-THWN stranded copper, PVC insulated, UL listed cable, Type TC, 600Volts, 90°C dry, 75°C Wet, IEEE 383 70,000 and 210,000 BTU.

10.3 Installation Requirements

10.3.1 Electrical Connections (Demarcation Points)

Electrical power service, from the power service provider, shall be provided at the Demarcation Points as indicated on the Plans. The Contractor shall be responsible for

all coordination with the power service provider as well as all materials, labor, or any other means to install electrical service to the field cabinets as indicated on the Plans.

10.3.2 Demarcation Points for Electrical Service

1) The installation of all electrical devices including wire sizing, conduit sizing, electrical conductor splicing in pull boxes, and grounding/bonding shall be as shown in Plans and in accordance with the National Electric Code (NEC).
2) The Contractor is responsible for determining, furnishing and installing the size and ratings of all electrical devices as required by Code and/or the utility.
3) Contractor is responsible for contacting each electrical utility company for service feed information. Each utility company may vary in its procedure for obtaining and providing electrical service.
4) It is the Contractor's responsibility to coordinate with each electrical utility well ahead of the desired (scheduled) date for electrical service, so that proper procedures can be followed for each utility.
5) If required, it is the Contractor's responsibility for obtaining the address for each electrical demarcation point.
6) The Contractor shall get all finished electrical demarcation points inspected by the appropriate authority, as determined by each electrical utility, prior to asking for required activation from the electrical utility.
7) The Contractor shall coordinate with the electrical utility to ensure conformance with interface requirements for point of attachment and metering. (Demarcations voltages on plans reflect voltage required for equipment and does not indicate type of service or meter from electrical utility. Example: 240V meters will still be required for 120V service to ITS equipment.)
8) Electrical service may not be connected to a cabinet or other device until all required grounding is complete.

10.3.3 Electrical Cable

Contractor shall abide by the follow installation requirements:

1) Conductors of the type, size and specification shall be installed at the location shown on Plans or as directed by Engineer.
2) Conductors in conduits shall be carefully pulled into place using methods in conformance with standard industry practice and the cable manufacturer's recommendations.
3) When wire or cable is brought up into the base of a foundation, sufficient slack shall be left to enable the connections to be made outside the foundation.

4) Powdered soapstone, talc, or other approved inert cable lubricant shall be used in placing conductors in conduit.

5) Conductors shall be handled and installed in such a manner as to prevent kinks, bends or other distortion, which could cause damage to the conductor or outer covering.

6) All wires and cables within a single conduit shall be pulled at the same time. When cables are pulled through hand holes, in pole shafts, etc., a pad of firm rubber or other suitable material shall be placed between the cable and the edges of the opening to prevent cable damage.

7) Cable, entrances into panels, cabinets, and conduit outlets shall be sealed from moisture, insects, rodents and foreign material with a sealing compound manufactured for this application.

8) Splices and taps for circuits rated below 600 volts shall be performed in accordance with the National Electrical Code and materials shall be used that will be compatible with the sheath and insulation of the cable and suitable for direct burial.

9) Straight splices shall be made with tubular copper compression type connectors, or bronze or copper split bolt connectors.

10) Tap splices shall be made with parallel tubular copper compression type connectors, or parallel groove bolted connectors.

11) Compression connectors shall be crimped with the connector manufacturer's recommended compression tool and die.

12) After a conductor splice is made, it shall be insulated with a rubber insulating tape, and then covered with material suitable for direct burial.

13) High voltage cables exposed at equipment terminations shall be provided with a suitable insulating sleeve from over the cable insulation to terminal points of the equipment.

14) Special attention shall be given to the shielded cable to maintain the continuity of the metallic shielding tape and to the proper termination and grounding of the shield at each splice of the cable run and at each end.

15) Cable warning tape shall be installed in all conduit trenches as specified.

10.3.4 Grounding Wire

1) Grounding splices shall not be insulated.

2) The grounding conductor shall be continuous and shall be connected to the ground system at all supporting poles and structures, to each transformer, to each sign support assembly, to each gate, and to each grounding conductor in

a multi-conductor cable assembly. Additional grounding rods electrodes shall be installed to obtain a maximum value of 10 ohms to ground.

3) Single ground rods shall be driven vertically until the top of the rod is at least 12" below the finished ground.

4) A length of #6 base copper, seven-stranded wire shall be attached to the ground rod with suitable ground rod clamps and connected to the grounding system.

5) Bolted grounding connections of solder-less type made of the high strength electrical bronze with silicon bronze clamping bolts and hardware may be used; designed such that, bolts, nuts, lock washers and similar hardware which might nick or other wise damage the ground wire will not directly contact the ground wire.

6) Non-dielectric circuit going into and leaving communication equipment cabinet shall be equipped with Department – approved transient voltage suppression system (TVSS) devices

7) Exothermic welded ground connections shall be used where specified.

10.4 Measurement

10.4.1 Electrical Service Connections (Demarcation Points)

Electrical Connections shall be paid for on a lump sum basis wherein no measurement will be made. Electrical Connections (Demarcation Points) shall cover the Contractors time and costs for coordinating with the utility companies as described in these specifications. The Contractor shall include the initial install cost from the utility as well as the cost of coordinating with the utilities in the bid price for Electrical Connections. The Contractor is required to coordinate with the utility companies for the installation of the service. Any physical facilities, such as conduit runs, needed by the service provider shall be the responsibility of the Contractor to install as shown in Plans..

10.4.2 Demarcation Point Assembly

Ground Mounted Demarcation Point Assembly for power service shall be measured in units of each and shall include the power service meter base, fusible disconnect switch, power distribution breaker panel, TVSS, mounting brackets, wood pole, electrical conduit, RGS conduit from nearest power service point to the demarcation point, connection hardware, grounding, wiring, and all related appurtenances as necessary to provide power service to each site. This price shall be full compensation for all labor, tools, materials, equipment and incidentals necessary to complete the work.

10.4.3 Electrical Service Cable

The Electrical cable will be measured in units of linear feet per 3 conductor service cable installed and paid for at the contract price per linear feet of each cable. The price bid shall include furnishing, installing, configuring, and testing of the electrical power cable including all required splices and other ancillary items required for complete installation of the cable. This price shall be full compensation for all labor, tools, materials, equipment and incidentals necessary to complete the work.

10.5 Payment

The contract unit price shall be full compensation for all work specified in this Section.

Payment will be made under:

Item No.	Description	Unit
Pay Item # 730-05.01	Electrical Service Connections	LS
Pay Item # 730-05.03	Service cable (3 Conductor AWG #6 wire)	LF
Pay Item # 725-10.50	Demarcation Point Assembly	EA

Electrical Cable will be paid per TDOT Standard Specifications

Electrical Connections (Demarcation Points) will be paid per TDOT Standard Specifications

All other Electrical items listed above will be paid per each as follows:

1) Stored materials will be paid per TDOT Standard Specifications
2) Final Payment will be made after complete installation and testing of that particular item.

SECTION 11
TERMINAL SERVERS

11.1 Description

This Section specifies the minimum requirements for Terminal Servers furnished and installed on this project. The work shall consist of providing all labor, materials, equipment, and incidentals necessary to furnish, install, and test Terminal Servers.

The Terminal Server device, also commonly referred to as a Port Server device, will be used to communicate bi-directionally between IP-based Ethernet network systems and field devices that communicate or are controlled via a full-duplex serial interface. This includes the Modems which convert RS 232 data to 4-Wire FSK signals to communicate with existing Traffic Controllers.

11.2 Materials

The equipment and software shall comply with the following minimum material Specifications:

11.2.1 General Capabilities and Performance Requirements

The Terminal Server shall include the following general requirements:

1) Provide 10/100 Base-T Ethernet Support
2) RJ-45/DB9 Serial Port Connection
3) RS-232/422/485 Selectable Serial Connections
4) Baud rates up to 230 Kbps
5) Full Modem and hardware flow control
6) TCP/UDP Socket Services
7) UDP Multicast
8) Telnet and Reverse Telnet
9) Modem emulation
10) SNMP (Read/Write)
11) PPP
12) Port buffering
13) HTTP
14) Remote management
15) DCHP/RARP/ARP-Ping for IP address assignment

16) LED status for link and power

11.2.2 Data Interface Requirements

The minimum video and data requirements include the following:

1) The Terminal Server shall support a minimum of four (4) bi-directional serial communications over Ethernet 10/100 Base-TX.
2) Each Terminal Server shall have a minimum of four (4) EIA-232/422/485 serial interface ports. These ports shall be individually and independently configurable, directly or over the network, to EIA-232/422/485 mode of operation as defined by the EIA for data format, data rate, and data structure (e.g., the number of bits, parity, stop bits, etc.). Each serial port shall support up to 230 Kbps.
3) Each serial port shall support IP addressing and socket number selection.
4) The equipment shall provide the capability to establish an IP connection directly from a workstation to any encoder IP address and socket number transport serial data.
5) Each Terminal Server shall have an Ethernet Interface (10/100Base-TX protocol, Full/Half-Duplex, Auto Sense (802.3), RJ-45).

11.2.3 Physical and Environmental Specifications

The minimum physical and environmental requirements include:

1) Each Terminal Server shall have the following ports:
   A) Network Port: Minimum one (1) 10/100 Mbps RJ-45
   B) Serial Data Interfaces: Four (4) RJ-45 ports.
2) Operate in a temperature range of -35 degrees C to 74 degrees C
3) Operate in relative humidity of 5% to 90% (Non-condensing)
4) Approximate Dimensions
   A) 6” x 4” x 1”
5) Provide external markings -- all connectors, indicators, and replaceable components shall be permanently marked and traceable to the supplied documentation, including schematics and parts list. The external markings shall include the product function name, model number, serial number, and Manufacturer’s name.
6) Terminal Servers shall be shelf mountable or rack mountable. Shelf for the cabinet shall be provided if needed. Other mounting options may be submitted for review and approval by the Engineer.

11.2.4 Management Capabilities

The minimum management system requirements shall include:

1) Remote Management and Port Configurable
2) SNMP compatible
3) Local Configuration Port
4) Port Configurable via Telnet

11.2.5 Electrical

The minimum electrical/power requirements include:

1) 120 VAC
2) External Power Supply is acceptable

11.3 Installation Requirements

All equipment shall be installed according to the Manufacturer's recommendations, the Plans and as follows:

1) Materials and associated accessories/adapters shall not be applied contrary to the Manufacturer's recommendations and standard practices.
2) The Contractor shall furnish all tools, equipment, materials, supplies, and manufactured hardware, and shall perform all operations and equipment integration necessary to provide complete, fully operational communications equipment as specified herein, within the Plan set, and/or in the Contract Documents. It is the responsibility of the Contractor to ensure DCE/DTE conflicts are addressed and that he equipment performs its required function when installed.
3) The Contractor shall provide the City with a written inventory of items received and the condition in which they were received. Once received, the equipment becomes the Contractor's responsibility. The Contractor shall provide all labor and equipment necessary to move inventory out of the designated storage facility and to transport it to the installation location. All equipment shall be installed according to the Manufacturer's recommendations or as directed by the City.

11.3.1 Testing Requirements

Testing shall include, but not be limited to, the following:

1) General Requirements
   A) The Contractor shall conduct a project testing program for all Terminal Servers as required in Section 1.5 of this TSP. The project testing

program shall include but is not limited to the additional specific requirements in this subsection.

B) All test results shall confirm physical and performance compliance with this TSP.

C) Submit all test results documentation to the Engineer within fourteen (14) days of completion of the tests. The Engineer will review test documentation in accordance with the Submittal Review Process in Section 1.8.

2) Bench Test System (BTS)

A) Prior to installation the Contractor demonstrate the ability of the Terminal Server to communicate with the Traffic Controllers through the Modem.

11.4 Measurement

The Terminal Servers will be measured in units of each and paid for at the contract price per each. The price bid shall include furnishing, installing warranties, full operation and configuring the Terminal Server in accordance with applicable Standards, Specifications, and requirements. The price bid shall also include the mounting hardware, Cat-6 patch cords, serial port cables or connectors, power cable, user manuals, testing, warranties, and any and all other equipment required to complete installation of the unit. This price shall be full compensation for all labor, tools, materials, equipment and incidentals necessary to complete the work.

11.5 Payment

The contract unit price shall be full compensation for all work specified in this Section.

Payment will be made under:

Item No.	Description	Unit
725-10.17	Terminal Server	EACH

The Terminal Server Equipment will be paid per each as follows:

1) 50% of the contract unit price upon installation and approval of Bench Test System Test results.

2) Additional 40% of the contract unit price upon approval of Conditional System Acceptance Test results.

3) Final 10% of the contract unit price upon Final System Acceptance.

SECTION 12
WEATHER MONITORING EQUIPMENT

12.1 Description

This section specifies the minimum requirements for Weather monitoring equipment elements installed on this project.

Project includes the following sites: (See plan set for site locations)

1) Two (2) Weather Stations with Atmospheric Sensors
2) Three (3) Stations with Stream Sensors and Rain Gauges
3) Nine (9) Stations with Road Sensors (three [3] stations have two [2] Road Sensors at each site)

12.2 Materials

12.2.1 Weather Stations with Atmospheric Equipment

At each of the two weather station sites with atmospheric sensors, provide the weather station tower, enclosure with a data logger to capture the data from all the atmospheric sensors at the site. Atmospheric sensors to provide wind speed and direction, temperature, humidity, barometric pressure, precipitation, visibility and present weather (fog, mist, haze (smoke, sand) and clear). The stations shall communicate with the operations center over the fiber network. Installed in the cabinet shall be a fiber optic termination cabinet and Ethernet switch that connects the data logger to the network. The supplied equipment will be a fully operational complete with installation. All components necessary to have a complete system shall be provided.

A. Each station Includes Standard Assembly for Data Collection Platform (DCP) including:

1) A Data Logger with not less than 3.0 MB Flash Memory for Data
2) Integrated serial ports, 1 x RS-232 (3-w) and 1 x RS-485 (2-w) port
3) Ethernet Communications Port
4) Time Clock, Compact Flash Card Place (up to 2GB) and Extended RAM
5) Product Manuals in PDF Format
6) Setup Software and Terminal Software
7) Stainless Steel Enclosure for DCP
8) Installation Frame and Radiation Shield

9) Tower Mounting Set for DCP using on Lattice Tower

10) Mains Power Supply for DCP with Heating Supply,

11) Mounting, Wiring, Connector and Surge Arrestor for 115VAC

12) Backup Battery Acc. Set for DCP with Mounting

13) Battery Regulator and Wiring

14) Internal 18AH Battery

15) USB Maintenance Cable for DCP

16) Standard Calibration for DCP

17) Standard Configuration for DCP with Metric Units (or Knots)

18) TCP/IP Interface for DCP with Surge Protection and Wiring to Ethernet Network Switch

19) Integrated Ethernet Module for DCP

20) Sensor Interface for DCP with dedicated connector, Surge Protection and Wiring to one (1) Weather Transmitter (heated)

21) Sensor Interface for DCP with Connector, Surge Protection, Wiring to one (1) Visibility Present Weather Sensor (Heated)..

22) Tower and Accessories including:

23) 10m self-supported fold-over tower (no guy wires)

24) Including Items:

25) Anodized Aluminum Tower

A) Tower 10 foot top section

B) Tower fold-over assembly including secured winch

C) Tower 10 foot bottom section with anti-climb

D) Tower 10 foot middle section

E) Two center tower mounts

26) Tower Grounding Kit

27) Tower Foundation Set

A) Fixed base assembly for concrete foundation

B) Concrete base:

1) Minimum dimension: 36”Wx 45” D

2) Cubic yards of concrete:1.25

28) Backup Batteries including:

A) Battery, Rechargeable 12V 18Ah

29) Weather Transmitter including:

A) Weather Transmitter (heated / RS-485)

30) Mounting Accessories for Weather Transmitter

31) Visibility / Present Weather Sensor including:

A) Present Weather Visibility Sensor

B) Visibility measurement range 10-2000m, identifies 4 different types of precipitation (rain, drizzle, mixed rain/snow, snow), reports fog, mist, haze (smoke, sand) or clear, precipitation intensity and amount

C) Hood Heater Set

D) Calibrator Set

E) Connection Cables

F) Mounting Accessories for Present Weather Visibility Sensor

12.2.2 Stream Gauge Stations

At each of the three (3) Stream Gauge Stations provide the station enclosure with a data logger to capture the data from one (1) stream sensor and one (1) rain gauge at each site. System to be pre-configured to support addition of water temperature sensor and expandable to handle future requirements. The stations will communicate with the operations center over the City fiber network. Provide the fiber and network switch to connect the data logger to the network at each station. The contractor shall provide a cabinet and cabinet foundation as shown in the plans. Each of the three (3) Stream Station Sites supplied equipment will be fully operational with installation. All components necessary to have a complete system shall be provided.

A. Each Site Includes Standard Assembly for Data Collection Platform (DCP) Including:

1) Data Logger with not less than 1.6 MB Flash Memory for Data

2) Logging and Mounting Plate

3) Integrated serial ports, 1 x RS-232 (3-w) and 1 x RS-485 (2-w) port

4) Time Clock with Compact Flash Card Place and Extended RAM

5) Product Manuals in PDF Format

6) Setup Software and Terminal Software

7) Main Power Supply for DCP

8) Backup Battery Acc. Set for DCP with Mounting, Battery Regulator and Wiring to 18Ah/12V

9) Internal Battery

10) USB Maintenance Cable for DCP

11) Standard Calibration for DCP

12) Standard Configuration for DCP with Metric Units (or Knots)

13) TCP/IP Interface for DCP with Surge Protection and

14) Wiring to Ethernet Module

15) Integrated Ethernet Module for DCP

16) Dual RS-485 Module for DCP (2 x RS-485 (2- w) + 1 x SDI-12)

17) Sensor Interface for DCP with Connector and Wiring to one (1) Tipping Bucket Rain Gauge (Heated).

18) Sensor Interface for DCP with Connector and Wiring to one (1) Radar Water Level Sensor

19) Backup Batteries including:

20) Battery, Rechargeable 12V 18Ah

21) Rain / Precipitation Sensor including:

    A) Precipitation Sensor (orifice 400cm2)

    B) Heated

    C) Resolution 0.2 mm (precipitation sensor RG13)

22) RGSTAND1140 (height 1140mm. Total height with sensor 1.5m)

23) All required cables

24) Radar Water Level Sensor including:

    A) QRH104-3

    B) SDI-12 communication

    C) Integrated display

D) 5mm accuracy

E) 20 meter range

12.2.3 Road Sensor Stations

The Contractor shall provide all equipment necessary to capture data from embedded road sensors. A data logger will be housed in the existing traffic signal cabinet. The Contractor will provide embedded road sensor(s) at the nine (9) locations. Three of the nine sites will include two (2) embedded road sensors and six (6) of the sites will have only one (1) embedded road sensor at each of those locations. See construction plans for placement details. The stations will communicate with the operations center over the City fiber network. The Contractor shall provide the fiber and network switch that connects the equipment to the network as shown on the plans. The supplied equipment will be a fully operational complete installation. All components necessary to have a complete system shall be provided.

A. Each site includes Standard Assembly for Data Collection Platform (DCP) including:

1) Data Logger with not less than 3.0 MB Flash Memory for Data

2) Logger and Mounting Plate

3) Integrated 1 x RS-232 (3-w) and 1 x RS-485 (2-w) port

4) Time Clock, Compact Flash Card Place and Extended RAM

5) Product Manuals in PDF Format

6) Setup Software and Terminal Software

7) USB Maintenance Cable for DCP

8) Standard Calibration for DCP

9) Standard Configuration for DCP with Metric Units (or Knots)

10) Integrated TCP/IP Interface for DCP with Surge Protection and Wiring to Ethernet Network Switch.

11) Ethernet Module for DCP

12) Dual RS-485 Module for DCP (2 x RS-485 (2- w) + 1 x SDI-12)

13) Interface card with connector and wiring for two (2) road sensors

B. Embedded Road Sensor Includes:

1) Embedded road sensor that includes sensing electrodes, optical sensors and temperature sensors within the same housing to provide surface and ground temperature measurements and road surface conditions (measures dry, moist, wet, moist and chemical, wet and chemical, frosty, snowy, and icy)

2) Integrated steel tubing & 50 meter cable

3) Road sensors to be installed by manufacture trained personnel.

12.2.4 Software Package

The Contractor shall provide a Software Package to communicate with all the remote stations. The software will be loaded onto the City's server and set up to poll each station over the City's fiber network. The Contractor is responsible to ensure a complete and operational system is provided and that all software is compatible with the City of Johnson City network. The system shall provide:

1) A user interface to display the data in a table or graph format. The system shall support alarms triggers and send email or SMS alerts when predetermined conditions are met.

2) System shall poll all field units once each minute

3) Data shall be archived in directories every 24 hours

4) Reports shall be available and can be generated from collected data and be saved in .csv format for exporting into Excel files.

5) SOFTWARE Package shall at a minimum include:

A) Software

B) Manual

C) Data collection from stations into ascii files.

D) Network monitor application

E) Configuration application

F) Minimum number of supported weather/hydro stations: 20

G) All data stored in archive directories

H) Latest data stored in output directory

I) Eight (8) simultaneous communication channels

J) Windows compatible.

K) One (1) set of technical manuals in English is included in pdf format.

L) Alarm software

M) Set alarms/notification triggers based on weather data parameters

N) Remote configuration of alarm triggers

O) WebView Software:

P) Can be used with Internet Explorer or similar browser

Q) Tabular and graphical reports

R) Station data availability reports

S) Station maintenance log

12.3 Installation

The Contractor is responsible for the complete installation of the Weather Equipment and support Software. Installation shall be performed by manufacturer trained technicians and inspected by the manufacturer. Software installation is part of the system and the completed system must be fully operational and tested.

12.4 Training

The Contractor shall provide eight (8) hours of training on the maintenance requirement of the field equipment to a maximum of four (4) city personnel. An additional four (4) hours of training on the system software shall be provided to four (4) personnel. No additional payment shall be made for this training.

12.5 Submittal Requirements

Contractor shall submit manufacturers' cut sheet detailing full compliance with this section prior to purchase of the covered equipment.

12.6 Project Testing

12.6.1 General Requirements

1. The testing program for the weather equipment shall include but is not limited to the specific requirements in this section for each device.
2. All test results shall confirm physical and performance compliance with this TSP.

3. Submit all test results documentation to the Engineer within fourteen (14) days of completion of the tests. The Engineer will review test documentation in accordance with the Submittal Review Process in Section 1.8.

12.6.2 Standalone Acceptance Test (SAT)

1. Perform a SAT on all equipment after field installation is complete, including but not limited to all communications electronics, to be installed in or connected to that given equipment.
2. Contractor shall demonstrate that the devices operates and is in full compliance with the above specification at the location of the weather equipment cabinet.
3. A SAT for a given piece of equipment shall only be performed in conjunction with the SAT for all devices installed in or connected to the devices and cabinet. As a minimum the test procedure will:
   a. Visually inspect the installation
   b. Inspect the documentation
   c. Provide a Functional test of all equipment at the cabinet.

12.7 Measurement

Weather Equipment will be measured in units of each and paid for at the contract price per each. The price bid shall include furnishing and installing the equipment and all related material and equipment specified in the Plans and this TSP, and all labor, system integration, testing, system documentation, training and miscellaneous materials necessary for a complete and accepted installation. The unit price shall also include but is not limited to the cabinet and all interior materials, mounting hardware foundations, external conduit entrances including conduit bodies and nipples, electrical service and pole grounding terminations. This price shall be full compensation for all labor, tools, materials, equipment, training and incidentals necessary to complete the work.

12.8 Payment

The contract unit price shall be full compensation for all work specified in this Section.

Payment will be made under:

Item No.	Description	Unit
725-10.45	Stream Gauge	EACH

725-10.46	Pavement Sensors	EACH
725-10.47	Weather Station	EACH

The Above equipment will be paid per each as follows:

50% of the contract unit price upon installation and approval of SAT Test results.

Additional 40% of the contract unit price upon approval of Conditional System Acceptance Test results.

Final 10% of the contract unit price upon Final System Acceptance.

SECTION 13
TRAFFIC MANAGEMENT CENTER (TMC) HARDWARE

13.1 Description

1) This section describes the City of Johnson City (TMC) equipment specifications and requirements for this Project. The work consists of providing all labor, materials, software and incidentals necessary to furnish, install, integrate, test and make functional upgrades. The work includes all additional licensing, documentation and training necessary to operate the system as required.

2) A hardware/software system solution is required for this Project to provide for the necessary testing to ensure the system is fully operational. Therefore, this Contract is a total "turn-key" solution that ensures subsystems are fully functioning. It is envisioned that the software system will be comprised of a combination of separate (stand-alone) off-the-shelf software packages along with all necessary third-party software and network interface tools and applications needed to provide a complete functional and operational system, with all necessary licenses and modifications as needed. The video wall display software is described in the Video Wall Specification and shall be loaded onto the workstations described in this section.

13.1.1 TMC Systems Design Report Submittal

1) The Contractor shall submit to the City for review and approval a TMC Systems Design Report submittal, which documents the detailed ISS design and TMC integration approach and includes all the elements specified in this section of the Specification:

   A) Overall TMC – Logical Architecture Diagram – showing interrelationships of software packages with hardware components.

   B) Overall TMC – Physical Architecture Diagram – showing interrelationships of equipment (workstations, servers, network devices, encoders/decoders, video wall, cabling, etc.) rack layouts, and cabling requirements.

   C) Client/server network and operating system requirements, if different from that specified in this section.

   D) The Contractor shall review the equipment/hardware/infrastructure (workstations, servers, cabling, patch cords, etc.) specifications provided in this section. If the Contractor requires something different from that currently specified to support their ISS design and configuration they shall provide their rationale/reasons with supporting

documentation for the requested changes or modifications as part of this submittal. If the Contractor is in full agreement with the hardware/equipment specifications as specified in this section they shall provide an affirmative acknowledgement/statement of this fact within the submittal.

E) The Contractor shall provide detailed descriptions of each software package that will be used and shall document that all functional requirements are being met by those software packages.

F) The Contractor shall provide documentation on application data file format/structure as specified herein.

G) The Contractor shall provide description and integration details of the video wall subsystem as specified as part of the overall software design and TMC configuration.

H) The Contractor shall provide description and integration details of the CATV/AV Control System as specified.

I) The Contractor shall provide four (4) copies including one (1) signed original to the City for review and approval fifteen (15) Calendar days prior to any procurement.

J) The Contractor shall provide three (3) CD copies of the TMC Systems Design Report submittal.

2) The Contractor shall also provide detailed discussion and rationale for any and all requested changes or modifications to system design configuration, hardware, and software operating system requirements as specified in this section.

The Contractor may request that one or more of the hardware components as specified herein be modified or replaced in support of their software and system solution. Any and all requested modifications and changes to hardware requirements shall be documented in detail in the submittal for consideration and approval by the City. The Contractor will be responsible for any additional hardware costs resulting from the requested changes.

13.2 Materials

13.2.1 General Requirements

1) The Traffic Management Center (TMC) system procured and installed under this Contract shall support daily operations and maintenance activities associated with the City of Johnson City Intelligent Transportation System (ITS).

A) TMC Systems Design Report Submittal

1) The Contractor shall document and submit a TMC Systems Design Report and hardware overview showing connections, placement, etc, to the City for review and approval prior to any procurement and installation of the equipment within the TMC. The TMC Systems Design Report shall document the Contractor's overall TMC/equipment design and layout including overall configuration, cabling,and hardware equipment requirements needed to support their proposed TMC solution design, including the video wall system.

B) Local Area Network (LAN)

1) The TMC solution shall operate over a TCP/IP client/server architecture, which will support operations over the TMC local area network (LAN) and the City network.

2) The Contractor shall document in a TMC Systems Design Report submittal the TMC building infrastructure (e.g., cabling, patch panels/cords, etc.) requirements needed to support their TMC system configuration and software design.

3) The TMC LAN shall support multiple operator interfaces capable of common operations. Each TMC operator interface shall support all of the provided software functionality limited only by the user's login name and password.

C) TMC Hardware / Equipment

1) The Contractor shall inspect and test the equipment prior to taking possession of it and sign-off stating that the equipment is operational and ready for further configuration and installation by the Contractor as part of their overall TMC design.

2) The Contractor shall be responsible for the installation, integration, configuration, and testing of all TMC hardware and equipment with their proposed software as specified herein.

3) It is the Contractor's responsibility to ultimately install, configure, integrate and test the TMC LAN with the installed software.

D) Communications

1) The TMC shall be able to communicate with field devices via fiber optics that support Ethernet communications.

13.2.2 Hardware Requirements

13.2.2.1 LAN Hardware

1) LAN hardware shall be required to connect servers, workstations, printers, and other auxiliary devices in a manner that ensures reliability and the ability to accommodate future expansion. The Contractor shall supply and configure one Cisco Catalyst 3750G-12s Switch fully populated with 1000BASE-LX/LH SFP units and be configured with the existing switch in the TMC.

2) A serial multiport concentrator may be required to connect existing signal controller devices and new devices with the Traffic Central Software. It is the Contractor's responsibility to coordinate with the City and provide equipment or software that meets all requirements for communication with existing field controller devices and new devices as they are brought on to the new Traffic Central Software.

3) Bridges may be required to link LANs at different geographic locations within the City (e.g., the control center, The Streets building, etc.). It is the Contractor's responsibility to coordinate with the City IT Department all client/server network relationships in the LAN hardware.

4) Firewall software and hardware shall be required to meet security needs. It is the Contractor's responsibility to coordinate the firewall needs of the system with the City IT Department.

13.2.2.2 PC and Server Hardware

1) Overall system capabilities and performance requirements include the following:

   A) Application Blade Servers and Workstation Computers

      It is expected that using VMWare a separate virtual server will be configured, integrated, and tested by the Contractor for each ITS application as follows:

      1) One (1) virtual server for the new Traffic Central Management Software provided by the Contractor

2) One (1) virtual server for new SQL database provided by the Contractor

3) One (1) virtual server for new network management system provided by the Contractor

4) One (1) virtual server for new CCTV control subsystem provided by the Contractor

B) It is required that four (4) workstation computers be installed, configured, and integrated with the software provided by the Contractor, and tested by the Contractor as follows:

1) Two (2) workstations designated for TMC Operators (all software)

2) One (1) workstation for the Traffic Engineer (all software)

3) One (1) workstation for the Streets Department Video Display (video wall control and CCTV control subsystem software only)

C) The Contractor will provide all other necessary equipment and infrastructure to support the TMC system operations, including, but not limited to, network cabling from the equipment room to the workstations (Cat-5e network cable), rack mounted video monitor, and keyboard.

D) It is the Contractor's responsibility to furnish all necessary software, install, configure, integrate, and test a fully functional system.

E) The Contractor shall clearly document and submit to the City a TMC Systems Design Report of the TMC hardware, configuration, and proposed software design, a detailed list of minimum hardware specifications, features and quantities needed, and the design rationale for any requested changes to hardware specifications or quantities.

F) The Cisco, IBM equipment and VMWare software has been selected to match the maintenance requirements and specifications of the City. The Cisco switches, the IBM server equipment and VMWare software will be provided by others. The Network Attached Storage and Workstations will be provided by the Contractor.

1) Blade Servers: (Provided by others)

a) Quantity: one (1)

b) HS22 XM, Xeon Quad-Core X5560 95W 2.80GHz/1333MHz/8MB L2, 2x2GB Chk, O/Bay SAS

c) 4GB (1x4GB) Dual Rank PC3-10600 CL9 ECC DDR3 VLP RDIMM 1333MHz

d) IBM - Hard drive - 300 GB - hot-swap - 2.5" SFF Slim - SAS-2 - 10000 rpm

e) Three (3) year onsite repair, 24x7, four (4) hour response (warranty and maintenance option)

2) IBM Blade Center H (Provided by others)
   a) Quantity: one (1)
   b) IBM eServer BladeCenter(tm) H Chassis with 2x2900W PSU
   c) IBM Intelligent Copper Pass-thru Module for IBM BladeCenter - Expansion module - Fast Ethernet, Gigabit
   d) IBM BladeCenter KVM/Advanced Management Module
   e) IBM UltraSlim Enhanced SATA DVD-ROM Combo
   f) 2.8m, 200-240V, Triple 16A IEC 320-C20
   g) Three (3) year onsite repair, 24x7, four (4) hour response (warranty and maintenance option) for Blade Center Chassis

3) VMWare Software (Provided by others)
   a) VMware vSphere Standard - (v. 4.0) - license - 1 processor
   b) VMware vSphere Standard - (v. 4.0) - maintenance (3 years) - 1 processor
   c) IBM ServicePac Remote Technical Support for xSeries with VMware Infrastructure 3 Standard - Technical support - emergency phone consulting (for single 2 CPU server) – three (3) year onsite repair, 24x7, two (2) hour response

4) Cisco Catalyst 3750G-12s Switch (Provided by others)
   a) Fully populated with 1000BASE-LX/LH SFP units
   b) Configured with the existing switch

5) Network Attached Storage
   a) Form Factor 1U
   b) Embedded Operating System Windows based
   c) Processor speed 1 GHz or better
   d) Four or more USB Ports
   e) Interface 1Gbit Ethernet
   f) Data Transfer Rate 10/100/1000 Mbs
   g) Storage Capability 2TB
   h) Software included

G) Workstation Computers -- This section specifies the minimum requirements for workstations and monitors supplied by the Contractor. Each controller console in the TMC receives one (1) workstation and three (3) monitors. A third workstation is installed in the Traffic Engineering Manager's office with two (2) monitors. The Contractor shall arrange and pay for the installation of the Siemens TACTICS workstation software on the new workstations. This installation shall be performed by a Siemens factory trained specialist. Software necessary for the control and management of the video wall shall also be installed on these

workstations. The workstations provided by the Contractor will meet the following minimum requirements:

• Processors	• Quad-core Intel® Core® i7
• Operating Systems	• Microsoft Windows 7 64 bit loaded in dual boot configuration.
• Chipset	• Intel P55
• Memory2	- Support for 16 GB of system memory
• Flash BIOS	• BIOS 8MB flash memory for system BIOS; SMBIOS 2.5 support
• Graphics2	• Shall support all software provided by the Contractor. As a minimum, there shall be support for two PCI Express x16 Gen 2 graphics card up to 150W including: ATI FirePro V3750; NVIDIA Quadro NVS 295/420/450 series, minimum 512 MB RAM
• Hard Drives	• SATA 2TB/s: 7200RPM with 16MB DataBurst Cache™ up to 1.0TB
	• Chassis supports up to two internal SATA drives (2.0TB storage maximum)
• Networking	• Gigabit Ethernet controller

• Audio Controller	• Integrated High Definition Audio (Rev 1.0 Specification) implemented with a two-chip audio solution comprised of the ADI 1984a High Definition Audio CODEC and the ICH10's integrated AC97/High Definition digital controller
• Standard I/O Ports	• Twelve USB 2.0: minimum
	• two PS/2; one RJ-45; stereo line-in and headphone line-out on back panel; microphone and headphone
• MINI TOWER CHASSIS	
• Dimensions	• Mini-tower orientation: (HxWxD) 14.58" x 6.69" x 17.08"; 37.04 cm x 17.0 cm x 43.38 cm maximum size
• Slots and Bays	• Bays: Two internal 3.5" HDD bays; two external 5.25" optical bays minimum
	• Slots: One PCIe x1 slot; one PCIe x16 Gen 2 graphics slot; two PCI slots minimum
• Power Supply	• 450W Power Factor Correcting (PFC) power supply minimum
• Monitor	• See Monitor Section
• Compatibility	
• Keyboard	• Enhanced USB
• Mouse	• USB optical two-button scroll mouse
• Storage Devices	• CD-RW/DVD Combo,
• Security	• Software: Setup/BIOS Password; I/O Interface Security

	• Hardware: Kensington® Lock slot and padlock ring
• Service and Support	• Base: 1-Year Limited Warranty with 1 year standard Next Business Day (NBD) On-Site parts replacement

1) LE ❍ Monitors
   A) LED: 22"color XGA minimum
   B) LED Display Area: 18.7" horizontal1 1.6"vertical 21.5"diagonal minimum
   C) Optimum Resolution: 1920x1080
   D) Brightness: 300cd/m2 (typ) minimum
   E) Contrast Ratio: 1,000,000:1 dynamic minimum
   F) Viewing Angle: 170o horizontal, 150o vertical minimum
   G) Response Time: 5ms bwb (typ), 2ms gtg (avg)
   H) Light Source: LED
   I) Panel Surface: Anti-glare
2) VIDEO INPUT:
   A) COMPATIBILITY: DVI
      POWER:
      Voltage: AC 100-240V, 50-60Hz (auto switch).
      Consumption: 45W (typ).
   B) OPERATING CONDITIONS:
      Temperature: 32-104oF (0-40oC).
      Humidity: 10-90% (non-condensing).

13.2.2.3 Equipment Racks

The Equipment Racks shall meet the following material requirements:

1.	Maximum Net weight	280 lbs. (127.27 kg)
2.	Maximum height	78.39 inches (1991 mm)
3.	Maximum width	23.62 inches (600 mm)
4.	Maximum depth	42.13 inches (1070 mm)
5.	Net depth with stabilizing feet	50.30 inches (1278 mm)
6.	Weight capacity (static load)	3000.00 lbs. (1363.64 kg)
7.	Weight capacity (dynamic load)	2250.00 lbs. (1022.73 kg)

8.	Minimum mounting depth	7.52 inches (191 mm)
9.	Maximum mounting depth	36.02 inches (915 mm)
10.	Rack height	42U
11.	Color	Black
12.	Vertical posts	16 gauge
13.	Front door	16 gauge
14.	Rear door	18 gauge
15.	Roof	18 gauge
16.	EIA mounting rails	14 gauge
17.	Side panels	18 gauge

18. All and necessary cable management and baying hardware included
19. Documentation shall be provided
20. Key(s), keyed-alike doors and side panels

Conformance

1.	Regulatory approvals	EIA-310-D
2.	Standard warranty	5 year repair or replace
3.	Standards	UL 60950

Rack Power Distribution Units

Provide Power Distribution Units meeting the following minimum requirements:

1.	Nominal output voltage	120V
2.	Maximum total current draw per phase	12A
3.	Output connections	NEMA 5-15P
4.	Nominal input voltage	100V, 120V
5.	Input frequency	50/60 Hz
6.	Input connections	NEMA 5-15 P
7.	Cord length	12 feet (3.66 meters)
8.	Number of power cords	1
9.	Maximum line current per phase	1440A
10.	Maximum input current per phase	15A

Physical Dimensions of Power Distribution Unit

1.	Maximum height	1.74 inches (44 mm)
2.	Maximum width	17.47 inches (444 mm)
3.	Maximum depth	4.03 inches (102 mm)

Environmental

1.	Operating environment	23 - 113 °F (-5 - 45 °C)
2.	Operating relative humidity	5 - 95%

Conformance

1. Regulatory approvals
2. UL listed
3. CSA
4. FCC Part 15 Class A
5. ICES-003
6. VCCI
7. Standard warranty 2 years repair or replace

13.2.2.4 Fiber Optic Termination Cabinet (FO Termination Cabinet)

1) In the Traffic Management Center (TMC) provide terminations for 300 fibers as shown in the Plans.300- fibers. (2 units of 144 fibers and one 12 fiber campus cable)

2) Use rack-mount termination cabinets designed to fit standard 19-inch EIA Equipment Racks.

3) Each fiber optic termination cabinet shall provide one hundred and forty-four (144) fiber connectors and shall store one hundred and forty-four (144) fusion splices in splice trays.

4) Use termination cabinets that integrate the splice trays and connector modules into one compartment within one cabinet or houses the splice trays and connector modules in separate compartments integrated into one cabinet.

5) Maximum dimensions of a complete termination cabinet shall be seven (7) rack units high (12.25 inches) by sixteen (16) inches deep.

6) Use fiber optic termination cabinets with fully enclosed metallic construction and with a protective hinged front cover for the connector ports.

7) Provide cable access on all sides of the enclosed area behind the connector port panel.

8) Provide sufficient splice trays for storing two hundred and eighty-eight (300) fusion splices in twelve (12) or twenty-four (24) splice increments.

9) Provide termination cabinets with fiber optic connector modules in a twelve (12) fiber configuration of six (6) rows of one (1) duplex connector couplers. Twelve (12) modules per cabinet for a total of one hundred and forty-four (144) fibers per cabinet.

10) Connector modules shall mount vertically in the termination cabinet front panel.

11) Connector modules shall include clearly legible and permanent labeling of each of the twelve (12) fiber connector couplers and shall be labeled and identified.

12) Provide factory-assembled twelve (12) fiber termination interconnect cables (pigtail cables) to be fusion spliced to the outside plant cable and connected to the rear of the connector modules.

13) Termination interconnect (pigtail cables) cables shall be all-dielectric single jacketed cable with high tensile strength yarn surrounding twelve (12) individual nine hundred (900) micron fibers following EIA/TIA-598B color identification with factory-installed connectors.

14) Provide all incidental and ancillary materials, including, but not limited to, grommets, cable strain relief and routing hardware, blank connector panels, and labeling materials.

13.2.2.5 Fiber Optic Connectors

1) Provide fiber optic connectors compliant with this Specification for all fiber optic infrastructures, including, but not limited to, fiber optic termination cabinets and fiber optic patch cords.

2) Provide only factory-installed keyed LC compatible connectors for all single mode fiber optic connections. Do not use field-installed connectors. Do not use adapter couplers to change connector types.

3) Provide only factory-installed keyed ST compatible connectors for all multi-mode fiber optic connections. Do not use field-installed connectors. Do not use adapter couplers to change connector types.

4) Use factory-installed ceramic ferule connectors with a thermal-set heat-cured epoxy and machine polished mating face. Install connectors as per manufacturer application and recommendations, including proper termination to the outer-tubing (900 micron tubing, 3 mm fan out tubing, etc.) required for the application.

5) Use connectors rated for an operating temperature of -40°C to +75°C.

6) Provide connectors that have an installed insertion loss of less than 0.50 dB, a typical loss of 0.20 dB, and an optical return loss of greater than 45 dB.

7) Use simplex connectors for all male LC connectors. Provide latching cover for two male connectors being used in a duplex configuration. Female couplers may be duplex but must allow simplex mating connectors.

8) Label each fiber position on panels and termination cabinets containing duplex couplers with the port/position ID as shown in the Plans.

9) Provide dust caps for all exposed male connectors and female couplers at all times until permanent connector installation.

13.2.2.6 Fiber Optic Patch Cords

1) Provide fiber optic patch cords consisting of a length of fiber optic cable terminated on both ends.
2) All patch cords shall be factory pre-connected assemblies adhering to all applicable cable and fiber specifications stated in these Specifications.
3) Provide patch cords of the appropriate length for the necessary connections, maintaining minimum bend radius, and with no residual strain at the connector or anywhere on the patch cord itself beyond self-support. Patch cords shall not have excess length beyond what is necessary for equipment connection and routing.
4) All single mode patch cords shall be duplex zip-cord fiber cable with simplex LC connectors.
5) All multi-mode patch cords shall be duplex zip-cord fiber cable with simplex ST connectors.
6) The two connectors of each end of the patch cord shall be differentiated by different colors.
7) Provide sufficient flexibility at each end to disconnect one connector without disturbing the other or to allow swapping of the two connectors within the same duplex coupler without disturbing the remainder of the patch cord.
8) Provide strain relief and reinforcement at the point where the duplex cable separates from the individual simplex connectors.
9) Fiber cable shall be 3mm jacketed cable with high tensile strength yarn protecting the inner fiber manufactured into a duplex zip-cord configuration. All Inside Plant (IP) patch cords shall meet NEC jacketing requirements.
10) Connector strain relief boots shall be fixed to the outer jacket and strength yarn.
11) Use yellow outer jackets for single mode fiber.
12) Use orange outer jacket for multi mode fiber.
13) No splices of any type are allowed within a patch cord assembly.
14) Fully test each patch cord assembly at the source of manufacture and place those test results on a test tag for each mated pair of connectors. Attach the associated tag to one end of each fiber within the duplex assembly.

13.3 Installation Requirements

All equipment shall be installed according to the manufacturers' recommendations, and the Plans.

13.3.1 General

1) The Contractor shall install, configure, integrate and test the TMC hardware and equipment in accordance with the Plans and Specifications.
2) All patch cords and cabling within the TMC shall be consistent and meet the minimum cabling requirements as specified.
3) The Contractor is responsible for ensuring that all cables, connectors, interfaces, supplies and any other items necessary for the proper operation and function of any component or software product shall be installed, integrated and tested to provide a fully operational system. The Contractor will be responsible for all cabling between the equipment and floor boxes and between equipment within the Equipment Room.
4) The Contractor shall maintain and be totally responsible for all TMC equipment, infrastructure and supplies until its complete installation and Final Acceptance. The Contractor shall pay all costs as required for the storage of equipment and infrastructure.
5) All TMC furnished and installed equipment by the Contractor shall be installed in a maximum of four (3) equipment racks located in the Communications Room.
6) The Contractor shall install, configure and test high performance workstation video cards specified aboveand three (3) LCD displays. The video cards shall support real-time H.264 real-time streaming video and capture applications. The video cards shall include Digital DVI-D video outputs.
7) The Contractor shall be responsible for determining the optimum configuration of the servers and related equipment in the rack to maximize accessibility and performance. The rack mount video monitor, keyboard and mouse shall be installed between 40” and 45” from the floor. The Contractor shall reserve a minimum of ten (10) rack units in one of the racks for the installation of the hardware firewall and other equipment.
8) Three (3) LCD graphics flat-screen monitors shall be installed for each TMC Operator (two (2) total workstations); The LCD graphics monitor shall be mounted on the TMC Consoles as specified.
9) IP address ranges for all devices will be provided by the Engineer. The IP address and VLAN assignments will be developed by the Contractor and submitted to the Engineer for approval.
10) The Contractor shall be responsible for obtaining any Management Information Base (MIB) information for all devices supporting SNMP. In the NMS user interface the Contractor shall configure the ITS device IDs for each SNMP device on the network.

13.3.2 Fiber Termination Installation:

1) Install two new 144 indoor/outdoor plant cables into new fiber cabinets, along with the relocation of a twelve (12) fiber single mode cable for the campus network. This existing 12 count cable connects the traffic department building to the street department building. Terminate it in the first twelve (12) positions of the first termination cabinet (Module A).
2) The existing two hundred and four (204) single mode sixty (60) multi-mode trunk cable that connects the TMC to the field shall remain in place during construction and installation of the new network. It is the Contractor's responsibility to maintain those connections until such time that the circuits are moved to the new fiber cable and termination rack. If the rack is in the way of the installation of the new equipment racks, the Contractor shall take care in moving the existing rack out of the way, while keeping all connections functioning.
3) Fully test each new termination, and place those test results on a test sheet for each cable. Provide the Engineer with test results of all OTDR and fiber testing.

Connect all equipment with patch cords to the fibers that it was originally connected to in order to restore service.

13.4 Measurement

The TMC Equipment shall be measured as a lump sum, for all equipment outlined in this specification and fully installed in the TMC. The price bid shall include costs of installation of the fiber optic cabinet and rack system, PC's, monitors, LAN equipment and all communications cabling, including the fiber optic pig tails and patch cords of length needed for a full 144 x 144 + 12 cable installation. This item shall include all logical and physical architecture and wiring diagrams in the TMC design report, as outlined in this specification. The price bid shall also include training, testing and hard copy system documentation and guides as outlined in Section 1 of this TSP. The price shall be full compensation for all labor, tools, materials and equipment necessary for a full TMC equipment installation.

13.5 Payment

The contract unit price shall be full compensation for all the work specified in this Section.
Payment will be made under:

Item No.	Description	Unit
920-10.02	TMC Hardware	LUMP SUM

The Hardware will be paid per each as follows:

-

1. 20% of the contract unit price upon installation of the equipment and hardware in the TMC
2. Additional 20% of the contract unit price upon successful termination of both ends of the 144 count fiber optic cabling
3. Additional 50% of the contract unit price upon Conditional Acceptance Testing of the fiber optic cable and equipment
4. Final 10% of the contract unit price upon Final System Acceptance.

SECTION 14
Traffic Management Center (TMC) Software

All commands and references in, or in connection with, the text in this Specification document are written to direct Contractor responsibility for software requirement action, unless otherwise specified. This section specifies the requirements for the Traffic Central Management Software System and Network Management System software. Other device control software provided by the Contractor that operates at the TMC on Contractor provided PC's is described in other section of these TSP's.

14. 1 DESCRIPTION

1) These requirements apply to all aspects including, but not limited to, the materials, installation, measurement and payment requirements for the TMC software. Any reference to the number of days in the Specification should be considered Calendar days, unless otherwise specified. The term "Engineer" or "City Engineer" is defined as the City of Johnson City Engineer overseeing the Project or a designated Construction Manager (CEI) working for the City of Johnson City Engineer. These individuals shall be identified during the Project's pre-construction meeting.

2) Each major component proposed by the Contractor shall be already installed and operational in a similar system in at least two other locations. Project descriptions, system descriptions and references shall be provided in the TMC Systems Design Report. References shall include project name, project location, agency contact, telephone numbers and e-mail addresses. The Contractor must supply information regarding successful implementations of systems comprised of a similar number of ITS devices communicating on the same type of Ethernet topology. These references must also be provided along with the initial cut-sheet submittals.

3) The ITS application software shall consist of server software installed on the City provided IBM Blade Server specified in the TMC PC/Server Hardware Section, and ITS client software installed on Contractor provided workstation computers. Only one server application per virtual server shall be allowed.

4) Modular/Expandable/Scalable – The delivered software packages shall be modular and capable of being expanded to support additional devices. It is the intent that each software component will have its own Graphical User Interface (GUI) and mostly be commercially off-the-shelf products. The Contractor shall submit their TMC system hardware integration and configuration details along with software requirements.

5) Administration and Security – Each software component provided on this Project shall provide a basic level of security and administration functions. The types of functions to be provided shall include:

a. Login, logout and exit
b. Security - username/password combination
c. Add and delete users
d. System administrator's ability to change user's password
e. Operators' ability to change their own password

14.1.1 EXISTING SYSTEM

1) The City currently has a central system called ACTRA. The current system is soon to become outdated and shall be replaced with an updated system under this Contract. The field equipment is 100% Eagle EPAC signal controllers and the new central system must be integrated with the existing equipment with no additional field equipment being installed. The current system communicates over a hybrid fiber/copper system with all field controllers connected using serial data. This project includes updating the communications media to an Ethernet based system. The central system installed under this Contract must be capable of performing all required functions using either communications protocols.

14. 2 MATERIALS

14.2.1 TRAFFIC CENTRAL MANAGEMENT SOFTWARE SYSTEM

14.2.1.1 System Architecture

1) The System shall be a highly customizable central office traffic management application based on the Microsoft Windows™ XP 64-bit/Windows™ 7 and Windows™ Server 2008 client/serverenvironment. The System may be configured for a single user, as a remote monitor for one or more on-street masters, or for multiple agencies with varying levels of access privileges for a large-scale Integrated Transportation Management System (ITMS). All share common components. The basic System is a client/server-based implementation. Processing is distributed across multiple machines using industry standard technologies.

14.2.1.2 Operating Systems and Platforms

1) The operating system for the Central server shall be Microsoft ™ Windows 2008 Server. System clients can be run on Microsoft ™ Windows XP Professional 64-bit, or Windows 7.

14.2.1.3 Local Area Network and Dial-up Access

1) Any physical networking technology supported by Windows XP or Windows 7 which supports the TCP/IP protocol shall be supported. The System shall provide for multiple simultaneous client Users (including remote Users) of the traffic control system application. These Users can connect via a LAN/WAN connection or through a dial-up to the Central Server. Dial-up is supported via standard Windows RAS. Dial-in access shall be allowed, or disallowed, based on standard Windows XP or Windows 7 authentication rules. Users, subject to their System security privileges, shall have access to the same system operations regardless of the type of network connection.

14.2.1.4 On-Street Controllers

1) The System shall support the following on-street controllers:
   a) M50 Series and other NEMA compliant local controllers
   b) EPIC interval based local controllers
   c) MARC300 master controllers

14.2.1.5 System Capacity

1) The System shall be highly scalable and capable of upgrade. The Contractor is responsible for providing a system that will work will all currently deployed City of Johnson City field equipment without additional hardware being added to field controller cabinets. The contractor shall provide a system that will support up to 250 intersections when installed and be upgradeable in the future to support an additional 100 field controllers. Each System Control Group shall be able to have up to 48 timing plans – 16 cycle and split combinations with three offsets for each.

14.2.1.6 Time/Date Synchronization

1) Shall manage all of the paging, email, and heads up alarm operations of the system. The service operates according to configurations established through the iGUI component and the settings below.
   a. The System shall provide for two levels of time/date synchronization. These include:
      1. Synchronization of the system clock with an external clock
      2. Synchronization of the internal clocks of all local controllers or field masters with the system clock.
   b. The system clock shall be the internal clock on the computer containing the System software. The external clock shall be:
      1. An internet connection to the NIST in Fort Collins, Colorado
      2. Both levels of time synchronization shall occur at User-specified intervals.

14.2.1.7 NTCIP Compliance

1) The System shall comply with the National Transportation Communications for ITS Protocol (NTCIP) Standards. It shall comply with NTCIP 1101 (formerly TS 3.2-1996) – Simple Transportation Management Framework, and shall meet the requirements for Level 2 Conformance.

2) The System shall comply with NTCIP 2001 (formerly TS 3.3-1996) – Class B Profile.

3) The System shall also implement conformance groups as defined in NTCIP 1201 (formerly TS 3.4-1996) – Global Objects Definitions.

4) The System shall comply with NTCIP standards for communication over TCP/IP.

14.2.1.8 Port Server

The System shall support one or more field communications servers to communicate with traffic devices. One of the servers may be the same as the central sever, or separate as required by the customer. The communication server(s) shall be PC based, running Windows 7 or Windows XP. If a separate communications server is desired, it must be connected via a high-speed LAN (10/100 or faster) to the central server.

14.2.1.9 Communications with On-Street Equipment

a. The System shall provide a flexible control equipment interface with the following capabilities:
   i. Communicate with all equipment periodically to monitor status
   ii. Allow handling of extended monitoring and upload/download requests concurrently
   iii. Allow up to 64 ECOM devices per serial communications channel. The actual number of ECOM devices allowed shall be constrained by the configured communication speed.
   iv. Poll devices once per minute

b. The System shall provide for local backup operation in case of failure of the System file server, communications server, or the communication system. Whenever communication is absent for a User-specified number of consecutive attempts, the local controllers shall revert to standby mode where each controller runs according to its local time-based control (TBC) settings.

14.2.1.10 Communications with On-Street Controllers

a. The System shall have the capability of communicating with controllers once per second.

b. Communications Media

The System shall support all of the following communications media:

   i. 1200 baud, two- or four-wire, half-duplex, TDM/FSK via twisted pair or telephone line
   ii. 1200-19,200 baud single or multi-mode fiber optic
   iii. 1200-19,200 baud CATV
   iv. 1200-19,200 baud fixed or spread spectrum radio
   v. 1200-19,200 baud private coaxial cable

vi. TCP/IP on Ethernet, fiber or radio

The System shall support the use of multiple media simultaneously.

c. Communications Protocols

The System shall support the following communications protocols over serial and IP simultaneously.

i. ECOM

ii. NTCIP

Protocols may not be mixed on the same serial channel.

14.2.1.11 Communications with Other Systems

a. Center to Center module is not requested or required at the current time but should be available for future purchase.

b. Communication with external systems shall be accomplished using industry standard methods and shall be reasonably transparent to the user. Failure of an external system shall not affect operation of the System or entities under its control.

c. The System shall support the NTCIP C2C interface revision 3 for connectivity and status interchange with other systems.

d. The System shall support an extended markup language (XML) interface to allow external systems that use XML to communicate with the System

SYSTEM STARTUP AND SHUTDOWN

Initial Start-Up

Upon the initial start-up of the Central server, the System shall begin normal operation with no prior state information.

User-initiated Shutdown

The traffic control system shall accommodate a User-initiated shutdown. All data shall be saved and all processes properly closed.

Emergency Shutdown

Three types of emergencies shall be accommodated by the System:

- Power failure
- Unplanned stoppage of program execution
- Operator observation of improper operation

On computer equipment protected by a “Smart” UPS, the UPS may be configured to initiate an orderly shutdown of the Windows operating system.

User-defined alarms (e.g., on-screen, paging) and automatic entries into the System Log shall signify the beginning and ending of system failures.SYSTEM FAILURE AND RECOVERY

Non-fatal Failure

If the System detects a non-fatal error within one or more of its processes, it shall alert the operator via an alarm on the operator stations and make an entry in the System Log. The System shall continue to operate.

Fatal Failure

If the System detects a fatal error within one or more of its processes, it shall attempt to alert the operator via an alarm on the operator stations and make an entry in the System Log. The System shall then attempt an orderly shutdown of the System followed by an automatic restart.

14.2.1.12 SYSTEM ACCESS AND SECURITY

The System shall allow multiple Users to access the System simultaneously from client workstations in the central control center, from remote locations, and from multiple agencies. The System shall include built-in security features such as unique passwords and privilege levels for different Users, and privileges assigned based on affiliation with a particular jurisdiction or agency.

14.2.1.13 Multi-User Access

The System shall support clients that can run on any Windows XP or Windows 7 workstations. Multiple Users with different access privileges can simultaneously log in to the System.

14.2.1.14 Remote Access

Remote access shall be supported via a WAN, either high-speed or a dial-up. Both types of connections require properly configured and functioning Windows XP or Windows 7 User authentication. Once connected and authenticated, the user can use the System as if locally connected.

14.2.1.15 Multi-agency Access

The System shall allow multiple agencies to simultaneously utilize the System without interfering with each other's operations. It may be desirable to restrict access to an entity to members of its owning agency. The application shall achieve this functionality by defining multiple jurisdictional agencies to which Users and entities may be assigned. This allows a User's access privileges to be assigned based on his affiliation with a particular agency.

14.2.1.16 DOCUMENTATION

Documentation shall be provided that completely describes the System software as installed. This documentation shall include drawings, sample screen images, text, and on-line help screens as appropriate. The tools provided shall enable the user to fully understand the operation and maintenance of the System, as well as to modify the System as requirements change and additional areas of control are added.

Software documentation shall be provided through a context sensitive online help system, providing the user with detailed operation and troubleshooting information. The on-line help shall be indexed and searchable.

14.2.1.17 GRAPHICAL USER INTERFACE

The system shall provide a Windows® Graphical User Interface (GUI) for user interactions with the system. All menus shall support a set of keyboard equivalent accelerators or hot keys, arrow key navigation of the menu bar and individual pull-down menus.

Menu and dialog box options that are not appropriate in a particular context or not available to a given User shall be either not present or "grayed-out" and unavailable for selection.

Traffic engineering and Geographical Information Systems (GIS) mapping terminology shall be used throughout the programming displays. Display organization and data entry approach shall allow System operators ease of use and a wide range of graphical databases to use.

The System shall allow the user to link dynamic graphics such as intersection lanes or other intersection graphics directly to System database elements without programming or recompilation. The System graphics library shall also include standard graphic objects the user can select to define directional roadway links, turn lanes. Proper representation of directional status attributes shall be available at all zoom levels.

14.2.1.18 System Guide

The Client Interface supplied with the System shall provide a System Guide, a tree browser style interface similar to Windows® Explorer. All of the available operations and devices in the System shall be displayed in the Guide. This view provides control and access to all System displays, reports, and dialog boxes. Workstation User interface functions shall be implemented using GUI concepts conforming to Windows® standards.

14.2.1.19 System Maps

The System Maps shall display a geographic overview of the control area, or a map with icons denoting different objects and their respective properties. Examples of objects are intersections, dynamic message signs (DMS), and closed circuit television cameras (CCTV). These icons shall be automatically updated in real-time to display current object information such as the mode of operation of an intersection. Icons can be double-clicked or right-clicked to access further information or perform System operations subject to the user's access privileges, per the Department's direction.

System Maps shall provide current signal, operation, link, and System Detector status, as well as System Control Group membership. It shall be possible to display specific data through a filtering mechanism.

The GUI shall provide control and access to all System displays, reports, and dialog boxes. All workstation User interface functions shall be implemented using GUI concepts conforming to Microsoft Windows® standards.

The System Map shall provide an intersection selection interface enabling the user to make a selection by pointing to a particular intersection object. When that object is selected, a more detailed view can be displayed. Right clicking on the intersection icon shall provide a popup menu for phase data, unit data, etc.

The Contractor is responsible for the creation of both a regional map of the City of Johnson City as well as detailed intersection maps as they exist at the time of system acceptance.

a. BACKGROUND

The System-wide maps shall be capable of containing commercial vector images of geographically accurate maps or scanned images as backgrounds. Common, industry standard image formats, such as: .bmp, .rlc .jpg .bip .rs .bsq .ntf ..tif .gis .img .ras .svf shall be supported.

The vector image formats supported shall include GIS data formats: ESRI Shape files (.shp .shx .dbf) ESRI ArcInfo Coverage files (.adf .tat .pat .rat) CAD drawings (.dwg, .dxf) Vector Product Format (VPF) table files (.pft .lft .aft .tft) and Spatial Database Engine (SDE) layers.

It shall be possible to have all files used for backgrounds be geographically referenced and use the same projection to allow the mapping display software to properly locate each layer relative to the other layers.

It shall also be possible to use simple bitmap files or vector drawings as map backgrounds.

b. PAN AND ZOOM

The user shall be able to dynamically zoom in on the graphic by selecting a box that defines the desired extent of the displayed area. Pull-down menus and toolbar buttons shall allow incremental zooms out, as well as zooming to fit the entire graphic into the window.

Scroll bars along the bottom and right edges of the graphic window shall allow the user to shift the portion of the graphic that is displayed. A Grab tool (represented by a hand icon) shall allow the user to use the mouse to point to any spot on the displayed map and drag it to any other point in the window and the map shall be panned so that the selected point is displayed in the newly selected location.

c. MULTIPLE LAYERS

The System Map shall support multiple layers, so that different types of background information can be turned on and off as necessary.

Each layer shall be input from a separate file. Each file shall be geographically referenced so that the layer can be properly located relative to the other layers. Also, all layers in a given map shall use the same projection.

d. LAYER MANAGER

A Layer Manager feature within the map program shall allow the user to control many aspects of the display of the layers. Using this feature it shall be possible to Hide or Show individual layers. It shall also be possible to set the color used to display the layer. For ESRI Shape files it shall be possible to Show or Hide text and to control its Font, Size, and Color.

e. CONGESTION LEVEL AND LINK STATUS

The user shall be able to add one or more objects (links) to the map to present the congestion level on roadways. For each link the user shall be able to select a series of points on the map to be connected by line segments to represent the link location. This allows the user to draw a link in each direction along a roadway. These link objects can be assigned to System Detectors. Each link can be configured to present volume, occupancy, volume plus occupancy, or. For each link the user defines a set of thresholds (at least three (3)) and associates a different color with each threshold (four (4) colors can be used to classify all values between, above and below the three thresholds). So for example, the user can assign green to low congestion, yellow for medium congestion, orange for medium-high congestion, and red for high congestion.

f. LINK TO INTERSECTION GRAPHICS

The user shall be able to select an intersection and display its intersection graphic using the mouse.

g. VIEWING AND MODIFYING OBJECTS

Objects on a Map, shall be denoted as icons, and shall be user-selectable. Clicking on an icon shall display a pop-up menu with all of the entity's components and operations listed. Clicking on one of the components shall bring up a window with the component's detailed information.

h. ADDING OBJECTS

The user shall be able to add objects to a Map by clicking on the graphic where the entity's icon should appear. It shall be possible to add existing objects to the map, or to create new entities while adding them to the map. Dialog boxes shall guide the operator through all of the steps required to define a new entity. The user shall have the capability to reposition objects as necessary.

The user shall be able to add Intersections, on-street Masters, System Detectors, CCTV Cameras, Dynamic Message Signs, and other Maps as entities to a System Map.

i. REMOVING OBJECTS

The user shall be able to remove objects from a System Map by right clicking on the entity's icon and selecting "Remove…" from the pop-up menu. The user shall be required to confirm the entity's removal prior to the action being completed.

j. ZOOM-LEVEL VIEW CONTROL

The user shall be able to set the current Zoom Level as the Minimum Zoom Level below which selected Entity Types or Layers shall not be displayed. This is a decluttering feature. It allows the user to control the amount of detail visible at any zoom level.

It shall also be possible for the user to set the current zoom level to the minimum zoom level required to view a selected layer or entity type.

k. BACKGROUND COLOR CONTROL

It shall be possible to set the Background Color for the System Map. A field of this color shall be visible at any point not occluded by a layer.

l. LEGEND

The user shall be able to cause a legend to be displayed in a separate moveable window. This legend shall display all of the possible visible states of the icons of all of the entity types.

m. ENTITY ICON SIZE CONTROL

It shall be possible to control the entity icon size.

n. LABELS

The user shall be able to add any number of text labels to the map. The user shall be able to control the visibility, font, size and color for each label.

o. HYPERLINKS

The user shall be able to add any number of hyperlink icons to the map. For each hyperlink the user shall be able to assign an icon, a name, a description, and a filename or URL. When the mouse pointer is over one of these, the name and description shall be displayed. When the user double-clicks one of these the map program shall open the file or URL in an appropriate browser application.

p. MONITOR MODE

The user shall be able to activate a monitoring mode in which all Intersections and other devices shall be polled for status once per minute and the status icon is updated for each as needed.

q. TREE VIEW

The map window shall display a tree of all entities represented on the map including link status, labels and hyperlinks. The entities shall be organized in the tree by type. For example, at the top level of the tree there shall be a node labeled "Intersections" under which there shall be listed all of the Intersections added to the map. It shall be possible for the user to expand and collapse each node with subnodes. When collapsed, the tree only displays the node name. When expanded, the tree displays the node name and all of its subnodes.

r. TREE VIEW PANE

The map tree shall be displayed in a widow pane next to the map display. It shall be possible to hide the tree pane so that only the map is displayed. It shall be possible to make the tree pane wider or narrower by dragging the sash between the tree pane and the map pane. The tree pane shall be scrollable as necessary.

s. SYSTEM CONTROL GROUP NODES

When an entity is added to the map, a node is added for that entity under the entity type node in tree. If the entity is an Intersection then a node is also added for that entity under the System Control Group to which that intersection belongs.

t. HIDING ENTITIES

By right-clicking a node in the tree, the user is presented with a pop-up menu. For a map entity, this menu shall include options to Hide and Show the icon for the entity. When hidden, the node is grayed in the tree.

u. BLINKING ENTITIES

One of the pop-up menu options shall be to Blink an entity. When selected, a dot shall appear on the map at the location of the entity and shall blink for a few seconds to allow the user to locate it.

v. HIGHLIGHT CHILDREN

One of the pop-up menu options shall be to Highlight Children. When selected, a dot shall appear on the map at the location of each subnode. For example, this feature shall allow the user to locate all of the intersections in a System Control Group.

w. CENTER ON ENTITY

One of the pop-up menu options shall be to Center the map display at the location of the entity.

14.2.1.20 Intersection Level Maps

The intersection maps shall display both static and dynamic information updated in real-time. The static information shall include the geometry of the intersection (including a graphic display of the number of lanes and their associated use), adjacent land use, the location of the controller, and a layout of the intersection with the intersection's signal inventory number and name. The dynamic information to be displayed shall include:

i. Vehicle signal phase status for each active phase and up to sixteen (16) overlaps
ii. Pedestrian phase status for a minimum of sixteen (16) active phases
iii. Call status of up to sixteen (16) vehicle phase detectors
iv. Call status of up to sixteen (16) pedestrian phase detectors
v. Call status for up to eight (8) special detectors
vi. Status of up to six (6) Special Alarms
vii. Control mode in effect
viii. Coordination plan in effect, if any (with cycle length and offset)
ix. Cycle timer (if in coordinated mode)
x. Split timer (for coordinated phases)

xi. Status of up to eight (8) special functions

xii. Status of up to three (3) auxiliary outputs

a. The user shall be able to add, delete, and modify the phases on these graphical features. The graphical features shall be able to be placed anywhere on the intersection graphics background.

b. The System shall also provide a text window to display data such as intersection name, cycle length, cycle counter, offset, etc.

c. The user shall be able to select intersection backgrounds from a standard library of backgrounds or create a background using any tool that can create a bitmap graphic in a format that is supported by The System.

d. The intersection display shall use standard terminology. The dynamic information shall be updated in real-time in accordance with the once-per-second monitor messages. The intersection display shall provide a user the same information (in a similar format) that is available at the front panel of the controller. The intersection display shall be capable of being dynamically sized by a workstation user. Resizing the window shall not reduce the amount of data displayed on a workstation monitor and the same aspect ratio shall be maintained as before the resizing.

e. The Contractor is responsible for the creation of an intersection map for all City intersections.

14.2.1.21 Multiple Intersection Maps

The user shall be able to create any number of Multiple Intersection Maps. A Multiple Intersection Map is a window divided into a grid of up to 7 by 7 panes. The user can assign a previously defined Local Map to each pane.

The Contractor is responsible for the creation of 10 multiple intersection maps selected by the City.

The System and the intersection mapping programs shall include the following enhancements:

a. Symbol Graphics

Graphics displayed on the screen shall change size accordingly with the map scale. If the user increases the size of the map, the map shall also increase the size of the symbol. This shall be done automatically and also the end user shall have the ability to changes sizes based on personal preferences.

b. Rotation of Symbols

Intersection map symbols should be readily available for rotation.

c. Copying Symbols

The System shall have the ability to copy existing intersection map symbols and display them on different parts of the intersection map while maintaining the scale and rotation factors.

d. Scroll Bars/ Elevator Bars

The mapping system shall add the scroll bar functionality to the maps and allow the user to pan around using only those bars.

e. Area Graphic Intersection Identification

It shall be possible to bring up the intersection map window by clicking on an intersection icon. It shall also be possible to bring up a popup window with additional information concerning that icon and access to other functionality, by clicking on the icon.

f. Legend Functionality Added

The system map shall add a legend to the map upon request. It shall show current dataset representation, as well as the current symbols on the map.

14.2.1.22 Database

a. The System shall use Microsoft SQL Server 2008 (MS-SQL). The database shall be used to store, retrieve, and maintain System data and parameter files and shall be available for common computer hardware platforms.

b. System General Principles on Database Entry/Edit The following principles shall apply to the data entry/editing process provided by the database software:

i. The database management software shall allow programming of the intersection controller databases. Each intersection controller shall have separate database programming pages. These pages shall contain all the programming options unique to each intersection.

ii. Scroll bars may be used to view and edit the information on the page if all the data cannot be displayed on the screen. Formatted screens with cursor positioning via the tab key or mouse shall be used

c. Database Entry Values

i. All database entries shall consist of alphanumeric values, Boolean values (YES/NO or ON/OFF entries), date values, or other value types supported by ANSI SQL. During program entry, the new data shall overwrite the old data.

ii. If the data has a detectable error, then changes shall not be permitted and the user shall be alerted by an on-screen error message.

d. Type Checking

i. All data items entered from any workstation shall be tested for data type (numeric, text, date, etc.) and allowed range. All string data items shall be tested to insure that they do not exceed the allowed length. The program shall not terminate because any data item is incorrectly entered. When errors or potential errors are detected, the program shall display a specific diagnostic message on the screen.

ii. The System shall allow the operator to re-enter the item or items that are in error or conflict with other entries. Errors shall be reported until all incorrect or conflicting entries have been corrected.

e. Range Checking

i. All numeric data items shall be tested to insure that they are within the ranges allowed by the software.

ii. A specific warning message shall be displayed whenever a data item falls outside the reasonable benchmarks and the operator shall be allowed to change the data item if desired.

f. Data Viewing and Editing

The same screen formats shall be used for initial data entry and for editing.

g. Data Commitment

i. The user may save a logical grouping of data (such as phase or unit data) after it has been entered or edited satisfactorily.

ii. Data shall be committed to the database when the user saves or exits and saves from a particular GUI. This shall be done in a manner common to all Windows® applications.

h. Ease of Use

i. The screen organization and data entry/edit method shall enable the operator to use all functions without the need to use reference manuals or cards.

ii. On-line help shall be provided to allow the user to quickly access information required to complete any given System operation.

i. Simple English Required

All field descriptions and inputs shall be presented in simple English, using common traffic engineering terminology.

It shall not be necessary to perform any decoding to read the information. All necessary field descriptions shall be specifically and discretely provided on the same display screen, as they are needed.

j. Copy Function

It shall be possible to copy from within the database software all logical segments of the database to other like segments of the database using "copy and paste" commands

k. Upload/Download of Database

i. From any System workstation, the System User shall be able to upload (from the controller) and download (to the controller) each controller's database including the local controller unit and the field master using the System's upload/download feature. Automatic uploads and downloads shall occur by time-of-day as required by the System configuration.

ii. The event log shall record that an upload/download request was made.

iii. Uploads shall not interrupt normal operation of the controller involved in the transfer, and shall not require the controller to go off-line.

iv. Downloads shall not interrupt normal operation of the controller involved in the transfer unless the updated data requires the controller to re-initialize before operating with the newly downloaded parameters (e.g., a change in ring structure), or unless it is dictated by the protocol.

v. The upload/download feature shall use block transfer techniques with verification of receipt. Non-verified data shall cause termination of the upload or download operation after retry. An error message shall be displayed when improper termination of the upload or download operation occurs.

vi. The software shall provide for the upload and download of all controller-timing parameters.

l. Time of Day Compare

i. The user shall have the capability of comparing the controller's local database with the System's database. Any discrepancies found shall be displayed to the user who then shall have the option of overwriting one with the other or keeping them different for each discrepancy.

ii. The user shall also be able to compare data based on the time-of-day. The System software shall provide for uploading (copying) the database and logical segments thereof from any controller to any workstation while all equipment is performing its traffic control functions. The software shall provide for downloading (copying) the database for a controller (and logical segments thereof) from any workstation to the controller.

m. Data Entry Aggregation

i. The software shall allow data to be entered in logical traffic engineering groupings. That is, all data for an intersection shall be entered together and in logical groupings, all System data shall be entered together and in logical groupings, etc.

ii. Any codes needed for data entry or editing shall be displayed on the same screen or display, together with the data to be entered or edited.

n. Use of Mnemonics

i. The software shall minimize the use of mnemonics to interface with the user on the screen, in printed reports, and in the System's documentation or worksheets

ii. Only mnemonics consisting of standard traffic engineering abbreviations and other straightforward abbreviations shall be acceptable.

o. Configuration Information

The database shall store all static information about System entities, such as device type, model, software version, phase orientation, and group affiliation.

TRAFFIC CONTROL

14.2.1.23 Distributed Control Modes

a. The System shall operate in a distributed control mode, making full use of the intelligence in the local controller. Each intersection may be assigned to a System Control Group, a master group, or designated as a solo. All entities under System Control Group control shall be monitored once per minute. Selected controller poll entities shall be monitored once per second. When a controller is in standby mode, it is receptive to group-level commands. However, a controller shall operate according to its locally stored program when any of the following conditions applies:

i. It is not a member of a group (it is a solo)

ii. It is set to local manual control

iii. Its System Control Group is in standby mode

iv. A local priority or preemption routine has been initiated

v. The conflict monitor has sent the intersection into flash

vi. It is in its start-up flash state

The following local control modes shall be provided:

FLASH

a. There shall be two main types of inputs that may initiate flashing mode: planned and unplanned. Planned inputs are those scheduled by time of day and the corresponding mode is called remote or automatic flash. This flashing mode is begun and ended systematically. All minimum vehicle and pedestrian clearance times are observed, and the user must specify the flash entry and exit phases. Normal operation following start-up flash shall not proceed unless the user specifies an entry phase.

b. Unplanned flashing modes begin immediately regardless of the point in cycle or current phase. These may be initiated by manual initiation at the cabinet, an MMU con-

flict, or some other error condition. Such conditions shall be reported to the System in the once-per-minute poll.

FREE

a. An intersection in free mode, by definition, has no coordination plan in effect.

COORDINATION

a. An intersection may run coordination patterns set manually, by local time-based schedule, or by System time-of-day.

PRIORITY/PREEMPTION

a. Intersections in the System shall respond to the following local preempt conditions:
   i. High Priority Preemption – for railroad or emergency vehicles
   ii. Low Priority Preemption – for bus or transit vehicles
b. There shall be six high levels and six low levels of preemption available. All priority and preemption activity shall be logged and reported.

14.2.1.24 Control Groups

The System shall have the capability of assigning the intersections to User-defined Control Groups. System Control Groups shall have unique names for use in reports or for display in a graphic.

Depending on the type of group (see below), certain group-level commands may be implemented, such as the selection of a timing plan for the entire group. The System shall utilize the software in the local controller to provide for a smooth, orderly transition between timing plans. Whenever a new timing plan is implemented, each controller shall achieve the new offset by implementing a transition with respect to the new cycle clock. For each intersection that is currently being displayed and filtered by the user, the System shall recognize and display a message that local transition is in effect. The user shall have the ability to modify the mode of offset correction implemented at any System intersection.

a. Master Groups
   i. Master groups are those controlled by on-street masters and shall be subject to the capabilities and limitations of the master controller.
b. System Control Groups
   i. System Control groups shall be controlled directly by the central software, which allows certain group-level commands to be implemented for all intersections in the group. Specifically, transition between free, flash, standby, traffic-responsive and coordinated modes may be enacted. Traffic-responsive algorithms may apply within a group and coordination plans may be changed by time-of-day. Whereas

on-street masters are limited in the number of intersections controlled, there shall be no physical limit to the number of intersections in a System Control group. Intersections may be assigned to a Control Group manually, by time-of-day, or by quick response. Each intersection may only belong to one System Control Group at a time.

c. Solo Groups

i. Although solo intersections shall be, by definition, not subject to group-level traffic control, they may be placed in groups with other solos for other purposes. Certain time-of-day commands may be implemented on solo groups, including uploads, downloads, setting the time, printing reports, and other auxiliary tasks.

14.2.1.25 Group Control

a. Intersections that are members of a group may be subject to group control.

b. Group-level control modes provided shall be:

i. Manual

ii. Traffic Responsive

iii. Time of Day (TOD)

iv. Quick Response (via TOD)

v. Standby

vi. Free

vii. Flash

c. The modes of operation shall be:

viii. Flash

ix. Free

x. Manual

xi. Auto

Group-level control modes may be selected manually by the user, scheduled by time-of-day, or implemented in response to current conditions by Quick Response and traffic-responsive algorithms. Control modes shall be selectable by intersection, by group, or by the System.

MANUAL CONTROL

A User shall have the capability to manually override any control mode currently in effect at any time. The user may set a coordination pattern, free, or flash for any intersection or group from any workstation.

CENTRAL FLASH

Individual intersections and control groups shall be capable of being placed in flashing mode by time-of-day.The type of flash mode (remote or local), the intersection name, and the date and time, shall be logged for each transition to and from flash. Controllers shall be brought back on-line upon termination of the flash mode. The return to normal operation shall occur only when the controller begins to time the major street walk interval (or green interval if WALK is not used).

TIME-BASED CONTROL (TBC)

a. The Time-based (i.e., time-of-day (TOD), day-of-week (DOW), day-of-year (DOY)) mode of operation shall allow the advance scheduling of signal timing plans to be implemented for a group. Group commands may select the timing plan for the group to follow, but the specifics of the plan shall be stored in the local controller.

b. The software shall include a User-friendly TOD/DOW/DOY event scheduler, which shall allow certain operator commands to be scheduled in addition to mode and timing plan changes. Some specific requirements are as follows:

c. Events may be scheduled from any workstation provided that the user has appropriate security level

d. The number of events scheduled shall be limited only by the database capacity.

e. Event scheduling shall have a resolution of one minute.

f. Scheduling of events for multiple entities through a single entry shall be accommodated

g. Flash and special function implementation shall be accommodated

h. Schedules shall contain the schedule of events for each day of the week and for recurring holidays. Functions stored in the schedule shall remain unchanged after they have been executed.

i. The scheduler should not limit the number of day schedules. Each day schedule for each controller should not limit the number of event (state-change) times. Each event time shall be programmable for all possible function changes that are supported by the controller/time¬-based coordinator.

j. All System functions executed by the System shall be recorded in the System Event log. The System Event log shall identify the source of the executed function as being either the scheduler or the interactive User and shall log the source (TOD, Quick Response or User) as well as the user responsible for the function.

k. The software shall provide for the programming of a minimum of seven (7) days in advance to implement any of up to a minimum of three (3) temporary schedules to ac-

commodate special circumstances. The temporary schedules shall override the normal daily plans.

l. The scheduler shall accommodate automatic adjustment for both the beginning and the end of leap year up to one (1) year in advance and Daylight Savings.

m. The Contractor is responsible for matching the existing schedules in the central system being replaced. All existing schedules shall be replicated by the Contractor in the new Traffic Central Software, and shall be updated accordingly with the new software technology.

TRAFFIC-RESPONSIVE CONTROL

a. In traffic-responsive operation, the System software shall select the coordination plan whose defined parameters most closely match the detected traffic pattern based on volume and occupancy data provided by detectors specially chosen as System Detectors.

b. The System database shall assign System Detectors to each control group for traffic-responsive operation. System Detectors may be assigned to more than one control group. The user shall have the option to allow automatic substitution of saved historical data in the event of one or more failed detectors.

c. The operator shall establish minimum time and minimum threshold criteria in order to prevent excessive switching between timing plans. The minimum time between timing plan changes for any given section shall be measured in one-minute increments and shall be defined separately for each group.

d. The operator shall also be able to define the averaging time in minutes, in order to smooth out short-term fluctuations; an occupancy correction, to account for non-standard loop sizes; and a minimum volume, below which the Occupancy is not used in the V+O calculations, in order to prevent false results due to vehicles parked over detectors.

e. The Contractor shall be required to set one group of intersections to respond to traffic-responsive operation. The City will select the group to be used and notify the Contractor accordingly.

QUICK RESPONSE

a. A Traffic Incident/Demand Management (Quick Response) mode of operation shall allow the System to dynamically react to current street conditions. For Quick Response to function, the control group shall use the TOD group mode. The user shall define a series of commands, referred to as the activation response, coupled with a Boolean statement comprised of logically connected (with and/or operators) conditions referred to as the trigger. When the entire logic statement (trigger) is

true, the associated activation response shall be executed. The trigger definition, activation response and optional deactivation response together is termed an event.

b. A Quick Response event is subject to a User-selected minimum duration time and a lock-out time. The minimum duration time is the minimum time the event must remain active unless manually disabled by the user. The lock-out time is the minimum time the event must remain inactive following deactivation before it may be reactivated. The event is followed by the deactivation response schedule, which is a series of commands to be executed upon deactivation of the trigger.

c. Conditions comprising the trigger may include time-of-day; volume, occupancy, or speed on a specified detector; intersection or System status; special function on/off; external command; or even another trigger.

d. Actual event activation and deactivation, User abort and activation errors shall be recorded in the System log. The System shall warn the user of conflicting activation response files, allowing the user to define conditions to alleviate the problem.

e. Quick response events shall be enabled or disabled by the user. A disabled event is one not eligible for execution even if its trigger condition is satisfied.

f. The Contractor shall program five quick response events as selected by the City to demonstrate this capability and for use by the City.

OTHER CONTROL FUNCTIONS

a. Coordination across groups – The software shall achieve coordinated operation across the boundaries of all control groups operating on the same cycle length or on multiples of the same cycle length by ensuring that all such control groups shall be time synchronized to a common reference.

b. Dual coordination – The software shall provide the capability of simultaneous coordination on crossing streets. To this end, it shall be possible for the operator to select a secondary coordinated phase (phase pair in dual-ring controllers) for each intersection. When so selected, THE software shall not permit termination of the secondary coordinated phase or phase pair until the planned (yield point) point in the cycle, even if the secondary coordinated phase would otherwise gap out.

c. Double-cycling – The software shall permit signals in a control group to operate at one-half the group cycle length. The intersections operating on both cycle lengths shall share a common reference so that coordination can be maintained.

SPECIAL FUNCTIONS

Up to eight special functions shall be available for SEPAC firmware controllers. Special Functions may have a unique name with up to 40 characters for reporting and other purposes.

14.2.1.26 Automatic Polling

a. The System shall allow automatic polling of entity controllers for status information, and shall be configurable to synchronize entities as well as compare data stored locally at entities with the central database's record of the same data.

14.2.1.27 Intersection Level

a. The status of each controller shall be monitored and any detected error condition shall be logged. Error conditions shall be stored in a form that specifies the type, date, and time of the error. Error processing shall be performed during both coordinated and free modes.

b. When the software identifies a communications or controller failure, an error message shall be logged and the intersection shall be dropped from System monitoring. When the fault has been corrected and the pick-up has been completed, the controller shall be returned to coordinated status and transitioned to the current timing plan.

c. The software shall test for the following on-line error conditions:

   i. Communication Error – If communication between the communications server and a local intersection is lost for a User-specified number of consecutive minutes, a failure shall be identified.

   ii. Controller Cycling – For actuated controllers operating locally in either coordinated or free mode, the software shall check the controller to determine if it leaves the current phase a minimum of once in a User-specified number of minutes. If this does not occur, a cycle controller command shall be issued to simulate vehicle calls. If the controller still does not cycle, a failure shall be identified and logged. A controller cycling error shall result in a coordinated intersection being placed in free mode. If already in free mode, a controller cycling error shall result in the intersection being placed in flashing mode.

d. In standby mode, the software shall use the same error checking and error processing procedures for communication error testing, controller cycling, and conflict error checking, as for the coordinated mode. Communication of detector data and other status information shall continue even when the local controller is in free mode. An error condition detected while a controller is in free mode shall be reported and logged by the System.

14.2.1.28 Local Preemption

The System shall monitor and recognize the occurrence of preemption at each local intersection. A local preempt shall cause the controller to suspend coordinated operation at that intersection. Ac-

cordingly, the intersection shall not be erroneously diagnosed as having experienced a coordination failure. When the local preempt status is removed, the controller shall transition back to coordinated operation. System log messages shall be recorded to note the beginning and ending times, as well as the type of preemption (High or Low priority and 1 to 6).

14.2.1.29 Local Manual Control

Local manual control shall be initiated and controlled by hardware at the intersection. The System shall identify any intersection in local manual control by means of a status message. Local manual control shall cause the controller to suspend coordinated operation at that intersection. Accordingly, the intersection shall not be erroneously diagnosed as having experienced a coordination failure. When the local manual control status has been removed, the controller shall transition back to coordinated operation. System log messages shall be recorded to note the beginning and end of local manual control. This is contingent upon appropriate cabinet wiring.

14.2.1.30 Cabinet Door Open

The System shall monitor the opening and closing of the cabinet door and log an appropriate status message. This is contingent upon appropriate cabinet wiring.

14.2.1.31 Communication Status

The System shall report the present status of the communication system at the controller. It shall be possible to monitor and log messages to and from the field. A graphic shall display all channel status, on-line, intermittent errors, off-line, and other messages.

14.2.1.32 Detector Monitoring

a. The local software shall be able to recognize and report local intersection detector failures (e.g., constant call, no activity, erratic output). The software shall also allow remote set-up, retrieval of internal loop diagnostic records, and status information.

b. The software shall also provide the following channel selectable parameters:

   i. Sensitivity thresholds

   ii. Detection mode

   iii. Delay time

   iv. Extend time

   v. Adjustable shorted loop fault frequencies

14.2.1.33 Detector Data Validity Checks

a. The local controller software shall continuously monitor the detectors for undercounting, overcounting, minimum/maximum presence, and communication errors. The local controllers shall log errors that are detected.

b. A detector shall be classified as failed when the data from the detector is not within the allowable range of values.

c. A detector shall be automatically suspended from use if it is failed.

Detector data smoothing shall be provided to prevent short-term fluctuations from incorrectly influencing traffic responsive control algorithms.

STATUS DISPLAYS

14.2.1.34 Controller Unit Status Display

The Controller Unit status display shall show the current ring and phase status for the local controller, dynamically updated once per second. Data displayed shall include:

a. Intersection Name

b. Group / Master name

c. Date and Time – current System date and time

d. Mode – includes

Manual – controller is running a pattern called for manually at the controller

System – controller is running the pattern called for by the System

Standby – controller has communicated with the System and is awaiting the broadcast of a pattern

Lock Out – controller is transitioning out of start up or preemption

Start Flash – controller is in startup flash

Start Flash w/ Preempt – controller is in startup flash with preemption active

Preempt XX – controller is in preemption for the indicated preempt (XX)

e. Pattern – the active pattern number and name, or Free or Flash

f. Cycle Count

g. For each Phase:

On/Next – On, Next, or blank

Vehicle Call Type– Non-Actuated, Max recall, Min recall, Vehicle call, or blank

Ped Call Type– Non-Actuated, Ped recall, Ped call, or blank

Hold/Omit– Hold, Phase omit, Ped omit, or blank

h. Ring 1 Counter / Ring 2 Counter – ring status and counter. Ring status includes:

Min Green

Added Initial

Yellow Change

Red Clear

Red Rest

Last Car Pass

Walk

Ped Clear

Walk Hold

Walk Rest

Gapped Out

Time B4 Reduce

Time To Reduce

Cars B4 Reduce

Effective Gap

Overlaps

14.2.1.35 Coordination Status Display

The Coordination status display shall show the current status for the local controller, dynamically updated once per second. Data displayed shall include:

a. Intersection Name

b. Group / Master name

c. Date and Time – current System date and time

d. Mode – includes

Manual – controller is running a pattern called for manually at the controller

System – controller is running the pattern called for by the System

Standby – controller has communicated with the System and is awaiting the broadcast of a pattern

Lock Out – controller is transitioning out of start up or preemption

Start Flash – controller is in startup flash

Start Flash w/ Preempt – controller is in startup flash with preemption active

Preempt XX – controller is in preemption for the indicated preempt (XX)

e. Coordination

f. Sequence

g. Coord Mode – Actuated, Coordinated Phase, Min recall, Max recall, Ped recall, Ped & Max, phase omit, or dual coord

h. Max Mode – Inhibit, Max I, or Max II

i. Offset Mode – Beg of Coord Phase or End of Coord Phase

j. Force Mode – Pattern or Cycle

k. Cycle, Offset, and Ring 1–4 for:

Setting

Active

Adjust – cycle and offset adjustment this cycle

Phase

Phase Mode – Actuated, Coord, Min recall, Max recall, Ped recall, Max+Ped recall, Phase omit, or Dual coord

Perm Phase – permissive phase

Perm Type – Ped, Vehicle, Forced or blank

Sync Timer

Correction Mode – Dwell, Dwell w/ interrupt, Short Way, or Short Way +

14.2.1.36 Preemption Status Display

The Preemption status display shall show the current status for the local controller, dynamically updated once per second. Data displayed shall include:

a. Intersection Name

b. Group / Master name

c. Date and Time – current System date and time

d. Interval – includes Min Green/Walk, Sel Ped Clear, Sel Yellow Sel Red Clear, Track Green, Track Ped Clear, Track Yellow, Track Red Clear, Dwell Green, Return Ped Clear, Return Yellow, Return Red Clear, Cycling, and Lockout.

e. Name, Call State, and Timer for up to six Preempts and up to six Priorities.

f. Call State: Active, Extension, Max Call, or blank

g. Timer: includes delay and duration timers

14.2.1.37 Time Base Status Display

The Time Base status display shall show the current status of the local time base data for the local controller, dynamically updated once per second. Data displayed shall include:

a. Intersection Name

b. Group name

c. System Date and Time – current System date and time

d. Controller Date and Time – current controller date and time

e. Program Day – controller local time based day number and User-created day name

f. Program Week – controller local time based week number

g. TOD Pattern – the active Time Of Day pattern number and name, or Free or Flash

h. Dimming – On or Off

i. Detector Diag Value = Detector Diagnostic Value

   Max Presence – time in minutes

   No Activity – time in minutes

   Erratic Cnt – counts per minute

j. Detector Reporting – On or Off

k. Detector Raw Multiplier – set to 10 or 100 x

l. Phase Function

   Max II – On or Off

   Omit – On or Off

m. Special Functions – On or Off for each special function

n. Auxiliary Outputs – On or Off for each auxiliary output

14.2.1.38 Detector Status Display

The Detector status display shall show the current status for the detectors assigned to a local controller, dynamically updated once per second. Data displayed shall include:

a. Intersection Name

b. Group/Master Name

c. Date and Time – current System date and time

d. Phase Detector, Special Detector, and Ped Detector – on-line, max presence, no activity, or erratic count.

14.2.1.39 MMU Status Display

The MMU status display shall show the current status of the signal states of each MMU (Malfunction Management Unit) channel and the current MMU faults and status for the local controller, dynamically updated once per second. Data displayed shall include:

a. Intersection Name

b. Group / Master name

c. Date and Time – current System date and time

d. Channel –number of the MMU channel

e. Red, Yellow, and Green signal states – indicated by x's, when active

f. Faults and Status – Yes or No

MASTER GROUP STATUS DISPLAYS

14.2.1.40 Group Active Status Display

The Group Active Status display shall show updating active status information for the two groups belonging to the selected Master controller. Data displayed shall include:

a. Master Name

b. Date and Time – current System date and time

c. For each Group:

   Mode

   Current Pattern

   Cycle Length and Cycle Counter

   Special Functions Active

   Patterns for four reference modes

      TR (Traffic Responsive)

      TBC (Time Based Control)

      MAN (Manual)

      REM (Remote)

14.2.1.41 Locals and Detectors Display

The Locals and Detectors display shall show updating information on the local and detector status for each of the Intersections in the selected Master group. Data displayed shall include:

a. Master Name
b. Date and Time
c. For each Intersection:

   INT – Intersection number

   GR – Group number

   ST – Local status

   DET – System Detector status
d. Status codes shall be used to indicate Online, Failed, Inactive, and Standby

14.2.1.42 Time Base Status Display

The Time Base Status display shall show updating TBC data for the two groups belonging to the selected Master controller. Data displayed shall include:

a. Master Name
b. System Date and Time
c. Week Day, Date and Time
d. Day Program and Week Program
e. For each Group:

   Pattern

   Traffic Responsive

   Sample Interval

   Log Interval

   Active Special Outputs

14.2.1.43 Traffic Responsive Display

The Traffic Responsive display shall show updating traffic responsive status information for the two groups belonging to the selected Master controller. Data displayed shall include:

a. Master Name
b. Date and Time
c. For each Group:

   V+O Out data for the two Computational Channels

      DR1 and 2 = Directionality (Offset) for channels 1 and 2

CS1 and 2 = Cycle Select for channels 1 and 2

NA1 and 2 = Non-Arterial (Split) for channels 1 and 2

Queue 1 and 2 for channels 1 and 2

Occ1 and 2 = Occupancy for channels 1 and 2

V+O Level In and Out data

Cycle, Split, and Offset

Queue 1 and 2

Occ 1 and 2 = Occupancy 1 and 2

14.2.1.44 Coordination Green Chart Display

The Coordination Green Chart display shall show a bar chart of updating information on the Coordination status for Intersections assigned to the selected Master group. Data displayed shall include:

a. The Master Name, System Date, and Time shall be shown above the bar chart
b. The Intersection numbers shall be listed along the horizontal axis.
c. The vertical axis shall indicate the percentage of the cycle, showing the relative positions of the Coord Green and Coord Red/Yellow times for each Intersection cycle.
d. The vertical bars show the relative positions of the Coord Green and Coord Red/Yellow as a percentage of the cycle for each Intersection.
e. The position of the green time shall be shown in green and the rest of the cycle is in red.
f. Local controllers that have failed shall be shown as dark gray, those that did not respond or responded incorrectly shall be in yellow, and those that are not running coordination shall be in brown. Inactive controllers shall be blank.
g. The current cycle position shall be shown as a horizontal line and correcting is shown as crosshairs.
h. A legend shall be displayed.

SIGNAL CONTROL STATUS

14.2.1.45 Group Broadcasts status

The Group Broadcasts status display shall show the current System broadcast data for each System Group. Data displayed includes:

a. Name - System Group name
b. Current Broadcast - the current Mode for the System Group: Standby, Free, Flash, or Pattern
c. Dial / Split / Offset - when Mode = Pattern, these fields show the traffic pattern broadcast to the group. Otherwise, these fields say “n/a”.

d. Source - lists who (or what component) requested the Signal Control Manager to broadcast the commands to the System Group. Options: User, TOD, Traffic Responsive, Third party, System, or Default (or Quick Response, when implemented).

e. Special Function - name of the Special Function broadcast to the System Group, if any. Special Functions are enabled in the Special Functions table of the System Group Data program module, discussed in the System Group Data Tables chapter.

14.2.1.46 Failed Intersections status

The Failed Intersections status display shall show data for the local controllers currently listed as failed. Data displayed shall include:

a. Name - Intersection name

b. Failure Reason - short description of why the Intersection is listed as Failed. Reasons include: No Communication, Wrong Mode, Wrong Pattern, Invalid Sync, and Wrong Mode-Other Control (example: the controller is being manually overridden in the field)

c. Group - System Group to which the failed Intersection is assigned

d. Port - number of the computer port to which this Intersection is connected

e. Address - address number for the Intersection controller

REPORTS

The System shall include a variety of predefined reports, which may be displayed on-screen, printed to a line printer, or saved to a file. These reports shall be fully integrated with the System database via ODBC using the Seagate Crystal Reports application. Additional User-definable reports may be generated with any data in the database. All reports may be scheduled to run at a User-defined interval starting and terminating at a User-specified date and time.

14.2.1.47 Intersection Measures of Effectiveness Report

Measures of Effectiveness (MOE) reports shall be calculated for a particular timing plan (e.g., 1/1/1) based on measurements taken while that timing plan was in effect. This permits the user to evaluate the effectiveness of a particular plan. The data output for this report shall include:

a. Local Name

b. Date and Time – current system date and time (when report was generated)

c. Report Start / Report End – the time range this report covers

d. Volume – the average number of vehicle actuations per cycle for each phase

e. Stops – the average number of vehicle actuations received during the non-green time for each phase

f. Delay – the average waiting time (number of cars waiting time) per cycle for each phase

g. Utilization – the average green time used per cycle for each phase

14.2.1.48 Cycle Measures of Effectiveness Report

Cycle MOE Reports shall allow the user to view a cycle-by-cycle listing of green time utilization for a timing plan and the time at which the cycle began. The data output for this report shall include:

a. Local Name–

b. Date and Time – current system date and time (when report was generated)

c. Report Start / Report End – the time range this report covers

d. Date/Time– when data were collected

e. Dial/Split/Offset = traffic pattern this report covers

f. Mode – options shall be:

   DBASE = Database reference for the following data,

   CORR–/CORR+ = Correcting, in which the Offset shortened or extended the cycle, respectively

   TRANS = Transition cycle, the first cycle for a coordination pattern

   COORD = a cycle for which there was no Offset correction

   FREE = non-coordinated

g. Phase = numbered 1-16

h. Utilization – the per cycle phase utilization in seconds. Value is negative when the phase used less than the entered pattern time or positive if the phase used more than the entered pattern time

14.2.1.49 Detector Volume Report

Up to 24 vehicle, pedestrian or special detectors for each intersection may return count data to the System at a time interval between 0 and 120 minutes. Each controller shall have a capacity to store up to 72 count periods. Once that capacity is reached, the oldest stored data shall be overwritten. The data output for this report shall include:

a. Local Name

b. Date and Time – current system date and time (when report was generated)

c. Report Start / Report End – the time range this report covers

d. Date/Time – start time for that line of data

e. Detector Number – identification of the detector

f. Volume – counts

14.2.1.50 Speed Trap Report

The Speed Trap Report shall list the percentage of vehicles below, within, or above, a User-specified speed range for a given detector pair. Values shall be given by timing plan with the begin-

ning and ending time. This report shall have capacity for up to 24 patterns of speed data. When this capacity is reached, the oldest data shall be overwritten. To avoid losing data, it can be uploaded from the controller to the System database by time of day. The data output for this report shall include:

a. Local Name
b. Date and Time – current System date and time (when report was generated)
c. Report Start / Report End – the time range this report covers
d. Date/Time – beginning time for the pattern monitored
e. Dial / Split/ Offset of the pattern monitored
f. Percent Lower, Percent Within, and Percent Higher– the percentage of the vehicles that were lower, within, or higher than the set speed range for the specified pattern.

14.2.1.51 Intersection System Detector Report

This report shall list the System Detector data for the selected Intersection. The data output for this report shall include:

a. Local Name
b. Date and Time – current system date and time (when report was generated)
c. Report Start and Report End dates and times – the interval covered by this report
d. Sample Time – date and starting time
e. Interval – the sample interval in minutes
f. Detector number
g. Raw Volume – counts
h. Raw Occupancy– counts (number of seconds)
i. Average Volume
j. Average Occupancy

14.2.1.52 Intersection System Detector Graphic

This report shall list identical information to the Intersection System Detector Report, except volume and occupancy data shall be expressed in bar charts. The data output for this report shall include:

a. Local Name
b. Date and Time the report was generated
c. Report Start and Report End dates and times – the interval covered by this report
d. Sample date and time
e. Multiplier – for the Raw Volume and Raw Occupancy graphs only. The multiplier is used to allow the data to fit on a standardized chart and may be 1, 10, or 100, as needed. (multiplier

value) x (Raw Volume or Occupancy shown in the graph) = actual Raw Volume or Occupancy counts.

14.2.1.53 Communication Faults Report

The Communications Faults Report shall list all communications failures with the date and time of occurrence. The data output for this report shall include:

a. Local Name
b. Date and Time – current system date and time (when report was generated)
c. Report Start / Report End – the time range this report covers
d. Fault Time – the date and time the fault occurred
e. Communication Fault Description – a brief description of the fault

14.2.1.54 Detector Faults Report

The Detector Faults Report shall list all detector failures with the date and time of occurrence. The data output for this report shall include:

a. Local Name
b. Date and Time – current system date and time (when report was generated)
c. Report Start / Report End – the time range this report covers
d. Fault Time – the date and time the fault occurred
e. Detector – which detector reported the fault
f. Detector Failure Description

14.2.1.55 Local Alarms Report

This report shall list all local alarms with the time and data of occurrence. The data output for this report shall include:

a. Local Name
b. Date and Time – current system date and time (when report was generated)
c. Report Start / Report End – the time range this report covers
d. Alarm Time – the date and time the alarm occurred
e. Alarm Description – brief description of the alarm

14.2.1.56 MMU Monitor Faults Report

This report shall list all MMU Monitor Faults, the date and time of occurrence, and the status of each channel input (i.e., red, yellow, or green) at the time of the fault. The data output for this report shall include:

a. Local Name
b. Date and Time – current system date and time (when report was generated)
c. Report Start / Report End – the time range this report covers
d. Fault Type and Time
e. Channel
f. Red, Yellow, and Green Signal status

MASTER GROUP REPORTS

14.2.1.57 Communication Faults Report

The Communications Faults Report shall list all communications failures with the date and time of occurrence. The data output for this report shall include:

a. Master name
b. Date and Time – current system date and time (when report was generated)
c. Report Start / Report End – the time range this report covers
d. Fault Time – the date and time each fault occurred
e. Location
f. Communication Fault Description – a brief description of the fault

14.2.1.58 Off-line / On-line Report

An intersection shall be deemed "off line" when after five successive polls by the Master, at least one of the following is not received or is not correct:

a. Mode (System or standby)
b. Pattern (dial, split, offset)
c. Position in cycle
d. Otherwise, it shall be deemed "on line." This report shall list all occurrences when an intersection goes on line or off line with the date and time and intersection number. The data output for this report shall include:
e. Master name
f. Date and Time – current system date and time (when report was generated)
g. Report Start / Report End – the time range this report covers
h. Event Time –the date and time the event occurred
i. Location
j. Event – a brief description of the event

14.2.1.59 Master Alarms Report

This report shall list all master alarms with the time and date of occurrence. The data output for this report shall include:

a. Master name
b. Date and Time – current system date and time (when report was generated)
c. Report Start / Report End – the time range this report covers
d. Alarm Time – date and time each alarm occurred
e. Alarm Descriptions – a brief description of the master alarm

14.2.1.60 Critical Alarms Report

Up to sixteen intersection or master alarms may be designated as critical. This report shall list the occurrence of all critical alarms with the time and date of occurrence. The data output for this report shall include:

a. Master name
b. Date and Time – current system date and time (when report was generated)
c. Report Start / Report End – the time range this report covers
d. Alarm Time – date and time each alarm occurred
e. Location
f. Critical Alarm Description – a brief description of the alarm

14.2.1.61 Group Pattern Changes Report

This report shall list all timing plan changes for a group with the date and time and source (e.g., time base, traffic responsive, manual). The data output for this report shall include:

a. Master name
b. Date and Time – current system date and time (when report was generated)
c. Report Start / Report End – the time range this report covers
d. Date and Time of each pattern change
e. Group number (1 or 2)
f. Pattern – cycle / split / offset
g. Source of the pattern change.

14.2.1.62 System Detector Report

This report shall list the volume + occupancy data for each System Detector. The data output for this report shall include:

a. Master name
b. Date and Time – current system date and time (when report was generated)

c. Report Start / Report End – the time range this report covers

d. Sample time – the time data collection began

e. Interval – time in minutes that data were collected

f. Group – group 1 or 2

g. Detector Number

h. Channels

14.2.1.63 System Detector Graphic

This report shall display the same information as the System Detector Report, except the volume and occupancy data shall expressed in bar charts. The detector numbers shall be listed along the horizontal axis, with the bars representing the V+O percentage.

14.2.1.64 Traffic Responsive Pattern Change Report

This report shall list all timing plan changes made by the traffic responsive control algorithm. The date and time and source (e.g., directionality, queue, split) shall be given for each change. The data output for this report shall include:

a. Master name

b. Date and Time – current system date and time (when report was generated)

c. Report Start / Report End – the time range this report covers

d. Date and Time of the event

e. Group – one or two

f. Pattern – cycle / split / offset

g. Source of the pattern change.

14.2.1.65 Traffic Responsive Volume and Occupancy Percent Report

This report shall list the traffic responsive volume and occupancy (V+O) data for the selected on-street master for each of the reporting channels. The data output for this report shall include:

a. Master name

b. Date and Time – current system date and time (when report was generated)

c. Report Start / Report End – the time range this report covers

d. Start time – the date and time data collection began

e. Group

f. Channel

14.2.1.66 Additional Reports

Additional reports generated through the Seagate Crystal Reports application shall be available. A Report Viewer program shall be provided to allow users to display these reports.

These reports shall include Access Data, All Intersection Alarms, All Intersection Communication Log, Channel and Address, Cycle and Offset, Cycle and Offset values, Detector Faults, Group Broadcasts, Group Intersections, Group Mode, Intersection List, Local Coordination, Local Preemption, Offset Cross, Orphaned Intersections, Pedestrian Push Button, Phase Data, Split times, Split times with data, System Intersection Log, TBC Traffic, Volume Detector, and Volume detector with data.

14.2.1.67 Custom Reports

In addition to the reports described above, the System shall permit the operator to develop his own custom reports via Crystal Reports. The user shall be able to define the format of those reports and add the new reports to the report menu. Once in the reports menu these reports can be run manually, by time of day, or via quick response.

14.2.1.68 System Event Log

The Event Log shall record System activity and allow the user to view or print all log entries. Filters shall permit the user to view or print only specific commands, events, or time periods.

ADVANCED SYSTEM FUNCTIONS

14.2.1.69 Features

a. The System shall support the creation of real-time time-space diagrams for a selected group of adjacent intersections, which shall show the actual green usage for each intersection for the most recently completed cycle. The data shall be shall be collected for a User specified number of cycles. The diagram shall be based on the average over those cycles. The real-time time-space diagram shall visually represent leading/lagging greens to show an accurate picture of the green band for both directions.

b. The System shall have the capability of interfacing with the Synchro software application. The same features available with AAP shall be available with Synchro. Data exchange shall be via Universal Traffic Data Format (UTDF) version 2.1.

c. The System shall provide an option for converting laptop computers to and from workstation and stand-alone modes, including a procedure for maintaining database integrity.

d. Once per second monitoring shall be supported using ECOM communications protocols. A minimal set of data shall be returned, including signal status and communications status. Up to eight intersections per communications channel shall be supported, with one pair of wires to each intersection. Periodic additional communications such as uploads and downloads of controller parameters shall suspend once per second monitoring while active.

e. Any number of Pagee Lists can be defined. A Pagee List is an ordered list of Users with a page offset for each. A Pagee List also has a repage delay and a maximum number of pages. List can be assigned to an intersection, a group or the System. When a critical alarm occurs, the corresponding pagee list shall be activated and paging shall be done until the alarm is acknowledged.

14.2.2 NETWORK MANAGEMENT SYSTEM SOFTWARE

The Contractor has the option of upgrading the existing Network Management Software System presently operated by the City of Johnson City to cover an additional 1000 ip addresses or providing a new solution. The existing system is "WhatUPGold" provided by Ipswitch, Inc. – Network Management Division. This system may be replaced by the City before this Contract is started. The Contractor is responsible for coordination with the City to ensure the proper current software is expanded under this contract. All current functionality will be maintained with any upgrade. New or upgraded system must providethe capability to monitor 2000 IP addresses to support the Traffic Engineering mission and have the following functionalities as a minimum.

1) A Network Management System (NMS) shall be furnished, installed, integrated and tested by the Contractor to monitor and communicate with the Simple Network Management Protocol (SNMP) interface for all the devices provided under this contract that have SNMP capability as stated in other sections of this TSP.
2) The NMS shall have the following minimum capabilities and features:
   - A) Shall include client and server software.
   - B) Shall support the latest and all previous versions of SNMP.
   - C) Shall support the latest and all previous versions of Remote Monitoring (RMON).
   - D) Shall provide a GUI.
   - E) Shall support the viewing of mulitiple VLANS.
   - F) Display screen shall include: desktop, pointer, windows, pull-down menus, dialog boxes, icons and control buttons, scroll buttons, etc.
   - G) NMS shall utilize a secure access scheme and login that authenticates all users. The System Administrator shall define user profiles allowing users access to authorized NMS resources.
   - H) Shall support standard TCP/IP protocol suite (SNMP, NTP, Ping, Trace Route, etc.) via Ethernet communications.
   - I) Shall support the ability to distribute the polling functionality throughout the network.
   - J) Shall generate alarms for network hardware and software failures and status changes.
   - K) Alarms generated shall include the following classifications as a minimum:
     1) Major and minor alarms
     2) Equipment status (hardware and software state change)
   - L) Alarms shall be transmitted via the following methods:
     1) Email
     2) Audible alarms
     3) Pop up messages on user interfaces

4) Message types shall be scheduled based on classification

M) NMS shall receive and store alarm events from network nodes and present them in an easy to read format to the user

N) User shall be able to acknowledge, store, print and delete alarm events

O) Architecture shall be scalable and manage and monitor at least 2000 network nodes.

P) Alarm reporting protocol shall be SNMP to monitor the health and status of network nodes and interfaces.

Q) In the SNMP network management scheme, NMS shall appear as the Manager and network nodes as Agents.

R) Shall be capable of using SNMP Version 1, 2 and 3 to set and query network node Management Information Base (MIB) I or II.

S) Shall accept all SNMP traps sent by network nodes.

T) Shall include a testing tool for generating SNMP alerts and an SNMP Version 1, 2, 3, MIB Browser.

U) Shall support multi-level hierarchical network mapping to represent networks and subnets.

V) Mapping hierarchy shall include floor, building and campus mapping levels.

W) Shall allow manual and automatic placement of network nodes within hierarchical maps.

X) Information about any field node shall be obtained by clicking on the node icon within maps. Color of map icons shall represent the current alarm status of nodes with the most severe alarm status being propagated to the highest level of network maps.

Y) The NMS shall be capable of generating scheduled hourly, daily, weekly and monthly network performance and trend reports.

Z) Performance reports shall include:

1) Network utilization, throughput, interface inbound and outbound errors

2) Trend reports shall include:

i) Availability (interface and node)

ii) Network round trip delay (in milliseconds)

iii) The ability to create custom trend reports based on any SNMP variable

AA) The NMS shall be compatible with all other software and systems being installed on this Project.

BB) The NMS shall be capable of generating emails for any alarms. The email function shall be programmable as follows:

1) E-mail generation to a minimum of fifteen (15) individual e-mail addresses
2) E-mail "to" addresses shall be configurable in any combination of:
   i) Day and time of week
   ii) Type of alarm
3) E-mail shall contain the description type and date of the alarm event.

14. 3 INSTALLATION

Installation Requirements

a. The Contractor will be responsible for the installation and integration of the software packages. The requirement is for a fully operational installation including the transfer of all data on the traffic system being replaced.

-

b. The Contractor shall supply any diagnostic and test software and computers necessary to perform the testing for the duration of the tests.

c. The Contractor shall install the server database and applications on a blade server running VMware software, provided by others.

d. The Contractor shall install the client software packages on three fixed workstations and one laptop computer.

e. It is the Contractor's responsibility to ensure that the software operates with no interruption, or crash, of the software. Should the software be deemed unstable at any time, it shall be the Contractor's responsibility to take corrective action to ensure stability and reliability of the software.

14.2.1.1 Training

a. The Contractor shall provide a minimum two (2) day training class for up to five (5) people on the configuration and operation of the Traffic Central Management software , for a minimum of 16 total hours. The class shall feature specifics on the following software features:
   a. Alarm Setup and Monitoring
   b. Controller Upload/Download and Timing Sheet overview
   c. Traffic Responsive Overview
   d. Controller Commands
   e. System Startup and Shutdown
   f. Specific GUI Instruction, including detail on System Maps and Status Displays
   g. Event Creation and Scheduling
   h. Reporting features and log retrieval
   i. Advanced Feature Instructions

b. The training will include instruction and demonstration of all functional capabilities of the software provided, including all training hard copy documentation for each student

14.2.1.2 Testing

The software is subject to the testing requirement of Section 1.4. In addition the Contractor is required to submit for approval a software Acceptance Test Procedure (ATP) that outlines the exercise of all functional requirements of this software specification. This includes, but not limited to, all reports, map, displays, uploads, downloads, commands, advanced features, and any other requests by the City or Engineer. The tested and accepted ATP will serve as the Conditional Acceptance Test of the software. Each requirement of this specification shall be tested in the presence of the Engineer and a representative from the City of Johnson City. Should a test procedure or requirement not pass, it shall be corrected by the Contractor in a timely manner and the specific requirements shall be retested until successful before the burn-in is started and final acceptance is given.

The two-week burn-in period also applies to all software provided under this Contract. Once tested and accepted, the City shall take over operation of the software system and run it for two weeks. Should any requirement not work to the City's satisfaction during this burn-in period, it is the Contractor's responsibility to correct the software to bring it into compliance with the software specification. This burn-in period shall not be exclusive of the equipment burn-in. This burn-in shall start with the equipment burn-in, once the system is 100% in place and all parts have passed conditional acceptance.

14. 4 MEASUREMENT

The Traffic Central Management and Network Management Software shall be measured as a lump sum, demonstrating a fully configured, operating software system. The price bid shall include costs of installation on the provided blade servers and Contractor provided PC equipment. This shall include all software developer travel and time associated with the configuration, development and installation of the software systems. The price bid shall also include training, testing and hard copy system documentation and guides. The price shall be full compensation for all labor, tools, materials and equipment necessary for a full software deployment.

14. 5 PAYMENT

The contract unit price shall be full compensation for all the work specified in this Section. Payment will be made under:

Item No.	Description	Unit
920-10.01	TMC Central Software	LUMP SUM

The Software System will be paid per each as follows:

1. 20% of the contract unit price upon installation of the software on provided blade servers and Contractor provided PC's

2. Additional 20% of the contract unit price upon successful configuration and migration of the existing traffic signal database
3. Additional 50% of the contract unit price upon testing and acceptance of the approved ATP.
4. Final 10% of the contract unit price upon Final System Acceptance.

SECTION 15
TMC VIDEO WALL EQUIPMENT

15.1 Description

1) This section describes the specifications and requirements for the video wall equipment for the City of Johnson City including the video display, video wall controller and related appurtenances.

15.2 Materials

1) The Contractor shall provide the services and equipment necessary to assemble, integrate, and test a new working video wall as per the requirements stated in this Technical Special Provision (TSP).
2) The wall shall be configured using 55" diagonal LED displays of HD 1080 native resolution (1920 x 1080), high fidelity loudspeakers and a video wall controller. The LED displays shall be edge-matched allowing the creation of one large, continuous video display.

15.2.1 Requirements

1) The following are the minimum requirements and performance criteria for the video wall:

    A) The configuration of the video wall shall be a single system consisting of six (6) Super Narrow Bezel LED displays creating a two (2) high by three (3) wide array.

    B) No projection or non-mirrored rear-projection system will be allowed.

    C) The proposed product shall be a new off-the-shelf product of the current production line. No discontinued products will be allowed.

    D) It shall be possible to display an image over the entire video wall array.

    E) It shall be possible to continuously size the Red Green Blue (RGB) and video sources to display images from a few pixels up to the size of the entire video wall array.

    F) The video wall controller shall be capable of receiving digital video images (images will be encoded over IP and internally decoded as needed to display on the video wall). All decoding for the video wall shall be performed inside the controller and not through external decoders.

G) Inputs into the video wall controller for display on the video wall for up to four (4) images (data windows) from separate Windows XP or later LAN-connected computer workstations, plus a minimum of thirty-two (32) simultaneous digital H.264 video images at up to six (6) Mbps each. The H.264 encoded CCTV camera solution submitted by the Contractor shall be compatible with the video wall controller. The video wall must also support a minimum of four (4) simultaneous analog inputs.

1) There shall be no limitation in terms of displaying any combination and any number of data and video (analog and/or digital) windows anywhere on the video wall.

2) The video wall controller shall allow input resolutions of at least 1600 x 1200 from any of the four (4) computer input sources.

3) The controller shall accept digital video images of varying bandwidth from 1 Mbps to 12 Mbps.

4) The controller shall also accept analog video images.

H) The video wall controller/software shall be capable of selecting any of the available video images via their IP address and displaying the image on any selected video window on the video wall.

I) The video wall controller/software shall also be capable of selecting any of the existing analog images and displaying the image on any selected video window on the video wall.

J) It shall be possible to connect the video wall controller directly to the LAN or directly to any Windows operating system workstation.

1) The initial configuration shall be LAN-based.

K) Remote control of the video wall controller from any of the workstations within the operations room or from the workstations in the adjacent offices or conference rooms shall be provided.

1) No separate licensing fees shall incur for these remote control capabilities of up to six (6) separate workstations.

L) The video wall Contractor shall provide for all cabling and cards necessary to connect the video wall controller to the displays, from the video wall controller to the Ethernet switch, and the video wall controller to the LAN.

M) The Contractor shall provide all power cords for the Contractor-provided equipment.

N) The Contractor shall provide a structure or reinforced wall on which the display wall shall be placed.

1) The lower sill of the lowest row of displays shall be located at least 54" above the floor level of the operations room.

2) The structure design must be reviewed and approved by the video display manufacturer to ensure the structure is designed properly for the displays.

O) The TMC will have three (3) quad receptacles for power service hookup to the video wall. Each quad receptacle will have a dedicated 20-amp service.

1) The Contractor shall provide a power requirements breakdown of all provided equipment as part of the submittal process.

15.2.2 Video Wall Controller

1) The video wall controller shall be sized to allow control of a modular graphic display wall comprised of six (6) displays. The following are the minimum video wall controller requirements. It is the Contractor's responsibility to provide a video wall controller that will meet the operational and display requirements in this TSP.

A. All video wall controllers, routers, amplifiers, etc. are to be rack mounted in the Communications Room in a 19" rack system.

B. Supported Resolutions: at least 1024 x 768, 1280 x 1024 and 1400 x 1050, as well as the native resolution of the chosen display devices

C. Digital Video Inputs: Able to display a minimum thirty-two (32) software-decoded MPEG-2/MPEG-4 H.264 CCTV camera streams at 1-12 Mbps each connected from an Ethernet Switch. The CCTV camera system shall be compatible with the Video Wall Controller such that the directly encoded digital image is able to be displayed on the wall without the need for external decoders. Network connections shall be RJ45 10/100/1000 Base-T ports.

D. NTSC Video Inputs: at least four (4) baseband composite video signals. Video connectors shall be BNC.

E. Network Interface: two (2) 10/100/1000 Base-T network ports on separate cards, configured as redundant with automatic fail-over. Network connections shall be RJ45.

F. The video wall control processor shall be advanced and fast enough to process and display all required analog streams, digital streams and PC videos as specified simultaneously without noticeable degradation of video quality. The Contractor shall coordinate with the vendor to ensure the proper processor is provided. At a minimum this shall include:

1) At least a Quad-core Intel Xeon CPU 2.8 GHz with 2 CPUs
2) Redundant hot-swappable power supply
3) Standard PCI-X bus
4) Redundant network interface cards
5) At least 3 GB ECC Main Memory RAM
6) Redundant hot-swappable ASTA RAID-1 hard drive with at least 250 Gigabytes
7) CD-ROM X48
8) CD/DVD Burner
9) Folding rack-mounted LCD flat panel monitor and mouse/keyboard drawer
10) At least two (2) USB 2.0 ports

G) The operating system of the video wall controller shall be Windows XP or later.

H) The video wall controller shall support either manual or automatic digital color balancing between the displays.

I) The video wall controller shall provide for auto detection of pre-configured input signals.

J) The video wall shall support a minimum input resolution of 1400 x 1050 for any of the inputs, through the use of video scaling, regardless of whether the inputs are digital video or computer data windows.

K) The video wall shall also provide input resolutions that are compatible with the NTSC system.

15.2.3 Display Wall Control Software

1) The video wall controller package shall include wall management software that will allow complete operation of video wall, including selection of specific video stream, via their IP address, for each window.

2) The display wall controller, displays, and ancillary equipment shall be controlled by software to integrate control system, recalling both predetermined, and user defined window layouts.

3) Layouts will include launching and minimizing of applications, placement of windows, and sizing of windows.

4) User control of the system to be accomplished via software giving the user the ability to change images on the video wall with a simple command using the layouts.

5) Users shall have the ability to interact with LAN-based applications on local workstations as well as on the video wall. The user shall be able to "screenscrape" through the network complete workstation desktops or applications of workstation desktops to the display wall, to other workstations or PCs, to other display walls (with similar controller platform) of other districts, and vice-versa. A total of six (6) licenses to screenscrape to and from should be supplied.

6) A license to control a second video wall located at the Street Department shall be included. This display shall consist of five monitors driven by a workstation specified in Section 2.

7) The software shall allow TMC and Street Department operators to move and position the computer applications, video windows, and RGB windows onto the video wall through a Graphical User Interface on the local and remote operator workstations.

8) The software shall allow fifty predetermined camera tours to be programmed and displayed on the wall. Tours shall be adjustable to display camera locations for time periods of 5 to 60 seconds as a minimum.

9) The software shall allow the operator to use the local mouse and keyboard to control the applications on the display wall as if the mouse and keyboard were physically connected to the display wall.

10) The display driver shall present the array of screens to applications as a single logical display, aggregating the resolutions of the individual screens into a single high resolution screen.

11) It should be possible to drag application windows from display to display and to expand single windows to span display boundaries, even filling the entire display wall, if desired.

12) The software shall provide diagnostics capability for the video wall and the controller.

13) The display driver shall allow the ability to hot swap graphics devices without the need to reboot or power down the system in the event of a graphics device failure.

14) The software should allow cycling of different video sources (analog or digital) within a video window.

15) All software licenses shall be one time purchases with no expiration date.

15.2.4 Video LED Displays

The requirements listed in this subsection relate to the minimum capabilities of the Video LED Displays.

A. Total amount of inputs to the initial video wall system: thirty-two (32) simultaneous digital and/or analog video inputs and four (4) data windows. Windows must be simultaneously viewable and independently sizable. Quad video windows are not allowed to achieve this minimum number. There should be no perceivable impact on performance, clarity, resolution, or video frame rate when all thirty-two (32) digital video image windows are open at the same time.

B) Video Refresh Rate Requirements:

1) All digital video inputs shall be shown with the same 'frames per second' rate as received and shall transmit at the same bandwidth as received.

2) All analog video inputs shall be shown on the screen at a minimum 30 frames/second per input.

C) Image Display

1) The overall array of displays shall provide the capability to display at least thirty-two (32) simultaneous video images (in any user-selected combination between the digital and the analog inputs) and four (4) simultaneous data windows.

2) Each video window shall have a "graphics overlay" capability so graphics information can be displayed on top of the video image. The TMC operator shall be able to "grab" an individual frame of video from any of the video windows and store it as a disk file on the host system. This "grab" must minimize interruption of the video display.

D) Image Quality

1) The image size shall be 55" diagonal.

2) Screen/Cube Gap (bezel to bezel max): < 5.5 mm

3) The video wall system shall provide for even center-to-edge brightness. Any differences shall be invisible to a viewer.

4) The digital picture shall be noise free and flicker free.

5) There shall be either manual or automatic digital color balancing between the displays.

E) Ease of Operation

1) There shall be no convergence adjustment.

2) There shall be minimal geometrical alignment and color adjustment.

F) Resolution

1) The native resolution of each display shall be 1920 x 1080 (HD 1080)

G) Color Selection

1) Support of a minimum of 8-bit - 16.7M color schemes.

H) Screen

1) Response time < 9ms
2) Contrast Ratio 3500:1
3) Brightness 700cd/m2

I) Dimension of Display

1) 48" wide x 27" high x 3.8" deep

J) Power

1) Consumption: 250W (Max)/225W (Typical)
2) AC 100 – 240 V, 50/60 Hz

15.2.5 CATV/AV Control System

The requirements in this subsection relate to the devices required to add additional functionality to the system. These items allow training, staff/public briefings and monitoring of CATV feeds.

1) General Requirements:

A) All AV components and video encoders and decoders shall be rack-mountable and installed, mounted, integrated and tested in the Communications Room racks.

B) Provide two (2) DVD players with TV/CATV tuners.

C) Provide one (1) DVR for periodic recording of video images for training purposes.

D) Provide one (1) AV Controller (Media Manager) for control of TMC AV equipment over the network.

E) Provide two (2) video encoders with audio capability for transmission of TMC AV video and audio sources over the network. Support of formats MPEG II, Mpeg IV, H.264.

F) Provide one (1) audio power amplifier controlled over the network for providing audio to external (in-wall) speakers mounted in the TMC Operations Room.

G) Provide control software allowing control from the TMC operator workstations using the local monitor on the workstation to launch a webpage from the control system that provides a control system graphic user interface.

H) Provide all other equipment, control cabling, patch cords, adapters, control software and tools, etc. required to ensure full operations of the AV equipment over the network.

I) The Contractor shall submit to the Engineer their proposed CATV/AV system design including the control system along with a drawing of the control configuration, interfaces, component cut-sheets, and control software and tools for review and approval.

2) AV Controller (Media Manager) Requirements:

A) AV Controller shall be Crestron MC2E or approved equivalent providing an Ethernet control of DVD (TV/CATV tuners) players, DVR and a room audio power amplifier.

B) Support the following minimum control formats: IR, RS-232 and TCP/IP.

C) Provide IR/serial ports, serial (RS-232/422/485) communication ports, isolated relay ports and a 10/100 Ethernet port for control and network operations.

D) Provide control system remote LAN interface software for remote control system interface/GUI from the TMC operator workstations over the TMC LAN.

E) Provide control of device on/off along with the various device features from the TMC operator workstation over the network.

F) The control system shall also support a variety of wireless communication modes, including one-way and two-way radio frequency and infrared transmission.

C. DVD/ DVR Player Requirements:

A) Provide two (2) combination DVD players with built-in TV/CATV tuners.

B) Provide progressive scan capabilities for DVD operations.

C) Provide playback of DVD media.

D) Provide remote network control from the TMC operator workstation through the AV Controller. Control of DVD and CATV tuner features shall be provided via the AV Controller (Media Manager) as specified in this section.

E) Provide device operational features, including, but not limited to, tuning (up/down), play, fast-rewind, fast-forward, freeze, audio mute, volume level, video adjustments, etc.

F) Provide full front panel controls for easy manual control operations in the TMC Communications Room.

G) TV/CATV tuner: Freq Range: 55 - 802MHz. Numbers of channels: 2-125 (CATV), 2-83 broadcast TV, NTSC (RF input) cable from cable modems. Tuner must provide for channel up and down plus channel add and delete (Note: cable modems and cable TV service will be provided by others in the Communications Room). Contractor shall configure for full operation of cable service through the CATV/AV Control System.

H) The Contractor shall be responsible for ensuring that all video and audio interfaces and types (i.e., composite, HDMI,S-video, RCA jacks, etc.) are fully compatible with the input from the cable modems and the output to the TMC video encoders.

I) The Contractor shall connect the video and audio outputs from the DVD players to the TMC video encoders located in the rack and connected to the network switch.

J) Temperature: 0-40°C (32-104°F). Humidity: 10-95%

K) Provide one (1) Digital Video Recorder (DVR) that meets the following minimum requirements:

1) Shall be connected to the network to allow recording of the selected H.264 video images.

2) Minimum of four (4) channels for simultaneous recording of a minimum of four (4) video images.

3) 30 frames per second recording rate

4) Minimum of 250GB Hard Drive

5) Ability to saved recorded images to a CD and/or DVD

4) Room Audio System Requirements:

A) Provide two (2), in-wall, 2-way high fidelity loudspeakers for the TMC Operations Room.

B) Speakers shall be flush mounted in the wall on each side and at the top of the video wall display and matched to the room décor and be as non-conspicuous as possible. The Contractor shall submit design and construction details for audio and speaker installation (including shop drawings) to the Engineer for review and approval.

C) The speaker cone shall be a minimum of 8-inches with a coverage pattern designed for the size and dimensions of the TMC Operations Room.

D) The speakers shall provide extended bandwidth performance and a nominal impedance of 8 ohms and be properly matched to audio power amplifier output levels.

E) All necessary processing equipment for amplification equalization and hum/noise control shall be provided.

F) The audio power amplifier shall be able to be remotely turned on/off from the TMC operator workstation over the network through the AV Controller and control software.

G) Audio shall still be available through the TMC video encoders played through the TMC operator workstation audio speakers. This will allow the audio in the TMC Operations Room to be turned off while the TMC Operator is still able to play the audio through a headphone jack installed by the Contractor at the two workstation consoles provided by others. The Headphones will be submitted by the Contractor for approval by the Engineer. The Headphones shall be Sony Model MDRNC7/BLK or equivalent Contractor shall also have the option to propose a different configuration to still provide the audio capabilities described above.

H) Temperature: 0-40°C (32-104°F). Humidity: 10-95%

15.2.6 Operating Environment

A. Operating Temperature of 5 ^{0} C to +40 ^{0} C
Humidity 20% to 80% non-condensing

15.2.7 Storage

A. Temperature 20ºC to +60ºC
Humidity 10% to 90% non-condensing

15.2.8 Video Wall Substructure

A. The Contractor shall provide all equipment necessary for the custom LED video wall mounting system.. The Contractor shall assemble this substructure in place within the facility.

2) The substructure shall be dimensioned to sustain the weight of the 2-layered 'stack' of displays.

3) Additionally, the lower ledge of the lowest row of displays shall be a minimum 54" above the upper portion of the raised flooring.

4) The structure design must be reviewed and approved by the display manufacturer to ensure the structure is designed properly for the displays.

15.3 Installation Requirements

15.3.1 General

1) The Contractor will be responsible for assembly of the various components of the video wall at the TMC. The Contractor will be responsible for the following items:

   A) Mechanical setup of the new wall, including assembly of the displays and mounts .

   B) Initial connection of the displays to the video wall controller.

   C) Connection of the displays to the video wall controller and connection of the video wall controller to the Ethernet Switch.

   D) Each connecting wire/cabling shall be clearly marked indicating source and destination. The labeling shall correspond to the provided documentation.

   E) Adjustment and set up of all input source parameters.

   F) Color balancing of the wall to match all sources.

   G) Create up to five (5) pre-set wall configurations either on control software or on a remote control system.

   H) Integration with the CCTV Control Software to ensure that each video image can be selected by the operator at a workstation and displayed on the desired video wall location.

15.3.2 Testing

A. General Requirements

   A) The Contractor shall conduct a project testing program for the video wall as required. The project testing program for the video wall shall include but is not limited to the additional specific requirements in this subsection.

2) At a minimum, the Contractor shall demonstrate the following in the Stand Alone Site Test:

   A) Simultaneous display of up to thirty-two (32) input sources and the adjustment of the display brightness for each display. All combinations of the thirty-two (32) video and four (4) workstation inputs (Thirty-two (32) video, thirty-one (31) video and one (1) workstation, CATV inputs, etc.) shall be tested.

   B) Ability to switch between a minimum of five (5) pre-configured screen setups.

   C) Demonstration of all required software features.

3) The Contractor shall supply any diagnostic and test software and computers necessary to perform the testing for the duration of the tests. External camera inputs may not be available at the time of the testing. Contractor is responsible for providing encoded video inputs in sufficient quantities to satisfy testing requirements.

15.3.3 Training

1) The Contractor shall also provide a minimum 4-hour training class for up to five (5) people on the configuration and operation of the video wall controller and cubes.

15.4 Measurement

The TMC Video Wall Equipment shall be measured as a lump sum, for all equipment and software outlined in this specification and fully installed in the TMC. The price bid shall include costs of installation of the video wall monitors, video wall controller, control software and necessary servers, monitors, LAN equipment and all communications cabling. This item shall include all logical and physical architecture and wiring diagrams for a complete video wall system. The price bid shall also include training, testing and hard copy system documentation and guides as outlined in Section 1 of this TSP. The price shall be full compensation for all labor, tools, materials and equipment necessary for a full TMC video wall equipment installation

15.5 Payment

The contract unit price shall be full compensation for all the work specified in this Section.
Payment will be made under:

Item No.	Description	Unit
920-10.02	TMC Video Wall	LUMP SUM

The Video Wall will be paid per each as follows:

1. 25% of the contract unit price upon installation of the monitors, equipment and hardware in the TMC
2. Additional 25% of the contract unit price upon successful installation and integration of the video wall software and servers
3. Additional 40% of the contract unit price upon Conditional Acceptance Testing of the video wall, including showing the ability to control, size and display video inputs and CCTV video images
4. Final 10% of the contract unit price upon Final System Acceptance.

SECTION 16
LED MONIOTRS

16.1 Description

1) This section describes the LED monitor specifications and requirements for this Project. The work consists of installing a video array wall inside the Streets department conference room and providing all labor, materials, software and incidentals necessary to furnish, install, integrate, test and make functional upgrades. The work includes all additional licensing, documentation and training necessary to operate the system as required.

16.2 Materials

16.2.1 General Requirements

1) The Traffic Management Center (TMC) LED monitors procured and installed under this Contract shall support daily operation and maintenance activities associated with the City of Johnson City Intelligent Transportation System (ITS).

2) The contractor is responsible for the construction of a video monitor display in the Street Department Building. Four (4) 32 inch monitors and One (1) 55 inch monitor shall make the video array. All equipment shall be new and installed in accordance with the manufacture specification. The system shall include one (1) workstation as described in the Specification Manual. The Contractor is responsible for all cabling and construction materials to make a complete and operational system. The monitors will display video images from Traffic cameras and computer generated maps of the City as required by streets department engineer. The 55 inch monitor shall have audio capability allowing presentations from the workstation or network to include audio.

3) It is expected that four (4) 32” LED monitors and one (1) 55” LED monitor will be configured, integrated, and tested by the Contractor. All monitors shall include a manufacturer’s warranty with at least one (1) year parts and labor along with free lifetime technical support.

16.2.2 Technical Specifications

1) The 32” LED monitors shall meet the following specifications:

    A) Display Size (diagonal): 32”

B) Native panel resolution: 1920 x 1080 pixels

C) Signal compatibility: 1080P (FHDTV), 1080i (HDTV), 720P (HDTV), 480P (EDTV), 480i (SDTV)

D) Number of colors: 1.06 billion

E) Dynamic contrast ratio: 50,000:1

F) Brightness: 500 cd/m²

G) Response time: 6ms

H) Viewable Angle: 178º/178º (horizontal/vertical)

I) Pixel/ Dot Pitch: 0.363 mm (H) x 0.363 mm (V)

J) Lamp Life: 50,000 hours

K) Rear Inputs:

1) 3x HDMI with HDCP

2) 1x RF (connector for internal tuner)

3) 1x component YPbPr plus Stereo Audio

4) 1x composite video plus 1x S-Video (shared stereo audio)

5) 1x RGB plus stereo audio

L) Side Inputs:

1) 2x multimedia USB

M) Outputs:

1) 1x SPDIF (optical) audio

2) 1x stereo audio

N) Additional features:

1) Picture-in-Picture (PIP)

2) Picture-against-Picture (PAP)

2) Wall mount specifications for the 32” LED monitors:

A) Hole Pattern: 200 mm x 200 mm

B) Screw size: M6

C) Screw length: 25 mm/16 mm (upper/lower)

D) Screw pitch: 1.0 mm

3) The 55" LED monitor shall meet the following specifications:

A) Display Size (diagonal): 55"

B) Native panel resolution: 1920 x 1080 pixels

C) Signal compatibility: 1080P (FHDTV), 1080i (HDTV), 720P (HDTV), 480P (EDTV), 480i (SDTV)

D) Number of colors: 1.06 billion

E) Dynamic contrast ratio: 2,000,000:1

F) Brightness: 500 cd/m²

G) Response time: 5ms

H) Viewable Angle: 178º/178º (horizontal/vertical)

I) Pixel/ Dot Pitch: 0.630 mm (H) x 0.630 mm (V)

J) Lamp Life: 40,000 hours

K) Rear Inputs:

1) 3x HDMI with HDCP

2) 1x RF (connector for internal tuner)

3) 1x component YPbPr plus Stereo Audio

4) 1x composite video plus 1x S-Video (shared stereo audio)

5) 1x RGB plus stereo audio

6) 1x Ethernet

L) Side Inputs:

1) 1x HDMI with HDCP

2) 2x multimedia USB

M) Outputs:

1) 1x SPDIF (optical) audio

2) 1x stereo audio

N) Additional features:

1) Picture-in-Picture (PIP)

2) Picture-against-Picture (PAP)

4) Wall mount specifications for the 55" LED monitor:

A) Hole pattern: 300 x 300

B) Screw size: M8

C) Screw length: 25 mm

D) Screw Pitch: 1.25 mm

16.3 Installation Requirements

1) The Contractor will be responsible for assembly of the LED monitors in accordance with the manufacture specification. The Contractor will be responsible for the following items:

A) Mechanical setup of the new wall, including assembly of the displays and mounts.

B) Connection of the workstation to the network

C) Connection of the monitors to the workstation using DVI-D to HDMI cables.

D) All cables shall be clearly marked indicating source and destination. Markings shall be on both ends of each cable.

E) Connection of workstation audio output to the 55 inch display

16.4 Measurement

16.5 Payment

The contract unit price shall be full compensation for all the work specified in this Section.

Payment will be made under:

Item No.	Description	Unit
920-10.04	LED Monitors	LS

The LED Monitors will be paid in a lump sum for all monitors as follows:

1. 50% of the contract unit price upon approval of installation of the LED moniotrs with the Bench Test System results.
2. Additional 40% of the contract unit price upon approval of Conditional System Acceptance Test results and installation.
3. Final 10% of the contract unit price upon Final System Acceptance

SECTION 17

Traffic Management Center

17.1 Description

1) This section describes the City of Johnson City Traffic Management Center (TMC) construction requirements and equipment as documented in Appendix A of this section. The work consists of providing all labor, materials, software and incidentals necessary to furnish, remove, install, integrate, test and make functional upgrades to the new TMC. The work includes all additional licensing, documentation and training necessary to complete the required installation and operation as required.

   This section describes the upgrade to the City of Johnson City's TMC and consist of the renovation of the traffic office building including the walls, HVAC equipment, electrical service upgrades, and the construction of a video wall at the TMC and show in the plans and in this TSP. This section also describes the requirement for the purchasing of consoles, storage cabinets and other furnishings required for the TMC.

   Further detailed descriptions of these items can be found in Appendix A of this section.

2) This Specification is for materials and equipment necessary to construct the proposed Project, however, every fitting, minor detail, or feature may not be described. Any component not explicitly stated in these Specifications, but necessary for the Site to function, shall be considered incidental and shall be furnished and installed at the sole discretion of the Engineer.

17.1.1 Contractor's Responsibility

1) The Contractor shall submit to the City for review and approval a TMC construction schedule. The document should detail the phasing of the construction and coordination of HVAC, Electrical, demolition, construction, etc. for the City's review and approval. All equipment submittals shall follow the submittal process as stated in the General section of this TSP.

2) The Contractor shall also provide detailed discussion and rationale for any and all requested changes or modifications to system design configuration, hardware, and software operating system requirements as specified in this section.

3) The Contractor may request that one or more of the hardware components as specified herein be modified or replaced in support of their solution. Any and all requested modifications and changes to hardware requirements shall be documented in detail in the submittal for consideration and approval by the City.

© 2010 Gresham, Smith and Partners. All rights reserved. Use subject to any written agreement with Gresham, Smith and Partners.

17.2 Materials

1) Equipment and materials required for this section can be found in Appendix A.
2) All equipment and materials furnished and installed on this Project shall be new and previously unused.
3) All equipment and materials of a similar type and nature shall be of the same manufacturer, model, revision, etc.
4) All bolts, nuts, and fastening hardware less than 5/8-inch diameter shall be stainless steel. All bolts, nuts and fastening hardware 5/8-inch in diameter and greater shall be hot-dipped galvanized.
5) All components, materials, and incidentals shall be recommended by the manufacturer as suitable for the intended application, including any material exposed to the weather.
6) All equipment and associated materials shall be installed and configured in accordance with the manufacturers' recommendations and standard practices.
7) When required by the Engineer, provide documentation and/or certification that all Project requirements are being met relative to the application that the Contractor intends.

17.3 Installation Requirements

1) All equipment shall be installed according to the manufacturers' recommendations, and the Plans.

17.4 Measurement

1) The TMC construction shall be measured as a lump sum, for all labor, material and equipment outlined in this specification and fully installed in the TMC. The bid price shall include costs for any demolition as shown in plans, the installation of walls and doors, the finishing of the TMC which includes but not limited to paint, carpet tiles, composition tile flooring, wall covering, trim, ceiling tiles, video wall, video array wall, HVAC unit, backup Generator unit. This item shall include all logical and physical architecture and wiring diagrams in the TMC design report, as outlined in this specification. The price bid shall also include training, testing and hard copy system documentation and guides as outlined in Section 1 of this TSP. The price shall be full compensation for all labor, tools, materials and equipment necessary for a full TMC equipment installation

© 2010 Gresham, Smith and Partners. All rights reserved. Use subject to any written agreement with Gresham, Smith and Partners.

17.5 Payment

1) The contract unit price shall be full compensation for all the work specified in this Section. Payment will be made under:

Item No.	Description	Unit
725-xx.xx	TMC	LUMP SUM

The TMC construction will be paid per each as follows:

1. 20% of the contract unit price upon receiving equipment and hardware in the TMC
2. Additional 70% of the contract unit price upon completion of work and Acceptance of work by the City.
3. Final 10% of the contract unit price upon Final System Acceptance.

© 2010 Gresham, Smith and Partners. All rights reserved. Use subject to any written agreement with Gresham, Smith and Partners.

City Johnson City, Tennessee
July 12, 2012
Federal Project # IVHS-9447(402)
State Project # 90952-1642-54

Appendix A Table of Content for TMC Construction

GENERAL REQUIREMENTS SUBGROUP

DIVISION 01 – GENERAL REQUIREMENTS
Waiting on Client input.....TO FOLLOW
01 4000 .....Quality Requirements 6

FACILITY CONSTRUCTION SUBGROUP

DIVISION 2 – EXISTING CONDITIONS
02 4119 .....Selective Structure Demolition 4

DIVISION 3 – CONCRETE
03 5416 .....Hydraulic Cement Underlayment 4

DIVISION 7 – THERMAL AND MOISTURE PROTECTION
07 9200 .....Joint Sealants 6

DIVISION 9 – FINISHES
09 2216 .....Non-Structural Metal Framing 7
09 2900 .....Gypsum Board.....7
09 5113 .....Acoustical Panel Ceilings.....4
09 6813 .....Tile Carpeting 5
09 9123 .....Interior Painting.....7

DIVISION 10 – SPECIALTIES
10 2113 .....Toilet Compartments 5
10 2800 .....Toilet and Bath Accessories.....5

FACILITY SERVICES SUBGROUP

DIVISION 26 – ELECTRICAL
26 0500 .....Common Work Results for Electrical.....4
26 0519 .....Low-Voltage Electrical Power Conductors and Cables.....6
26 0526 .....Grounding and Bonding for Electrical Systems 3
26 0533 .....Raceway and Boxes for Electrical Systems 7
26 0553 .....Identification for Electrical Systems.....6
26 2416 .....Panelboards 7
26 2726 .....Wiring Devices.....6
26 3213 .....Engine Generators.....14
26 3353 .....Static Uninterruptible Power Supply.....13
26 4313 .....Transient-Voltage Suppression.....4

COMMUNICATIONS INFRASTRUCTURE
Section 1 – Fiber Termination.....4
Section 2 – Equipment Racks.....2
Section 3 – Consoles (Includes Console Layout Sheets).....4

END OF TABLE OF CONTENTS

© 2010 Gresham, Smith and Partners. All rights reserved. Use subject to any written agreement with Gresham, Smith and Partners.

PART 1 - GENERAL

1.1 SUMMARY

A. Section includes administrative and procedural requirements for quality assurance and quality control.

B. Testing and inspecting services are required to verify compliance with requirements specified or indicated. These services do not relieve Contractor of responsibility for compliance with the Contract Document requirements.
   1. Specified tests, inspections, and related actions do not limit Contractor's other quality-assurance and -control procedures that facilitate compliance with the Contract Document requirements.
   2. Requirements for Contractor to provide quality-assurance and -control services required by Construction Manager, or authorities having jurisdiction are not limited by provisions of this Section.

C. Related Sections:
   1. Divisions 02 through 49 Sections for specific test and inspection requirements.

1.2 DEFINITIONS

A. Quality-Assurance Services: Activities, actions, and procedures performed before and during execution of the Work to guard against defects and deficiencies and substantiate that proposed construction will comply with requirements.

B. Quality-Control Services: Tests, inspections, procedures, and related actions during and after execution of the Work to evaluate that actual products incorporated into the Work and completed construction comply with requirements. Services do not include contract enforcement activities performed by Construction Manager.

C. Preconstruction Testing: Tests and inspections performed specifically for the Project before products and materials are incorporated into the Work to verify performance or compliance with specified criteria.

D. Product Testing: Tests and inspections that are performed by an NRTL, an NVLAP, or a testing agency qualified to conduct product testing and acceptable to authorities having jurisdiction, to establish product performance and compliance with specified requirements.

E. Source Quality-Control Testing: Tests and inspections that are performed at the source, i.e., plant, mill, factory, or shop.

F. Field Quality-Control Testing: Tests and inspections that are performed on-site for installation of the Work and for completed Work.

G. Testing Agency: An entity engaged to perform specific tests, inspections, or both. Testing laboratory shall mean the same as testing agency.

© 2010 Gresham, Smith and Partners. All rights reserved. Use subject to any written agreement with Gresham, Smith and Partners.

H. Installer/Applicator/Erector: Contractor or another entity engaged by Contractor as an employee, Subcontractor, or Sub-subcontractor, to perform a particular construction operation, including installation, erection, application, and similar operations.
   1. Use of trade-specific terminology in referring to a trade or entity does not require that certain construction activities be performed by accredited or unionized individuals, or that requirements specified apply exclusively to specific trade or trades.

I. Experienced: When used with an entity or individual, "experienced" means having successfully completed a minimum of five previous projects similar in nature, size, and extent to this Project; being familiar with special requirements indicated; and having complied with requirements of authorities having jurisdiction.

1.3 CONFLICTING REQUIREMENTS

A. Referenced Standards: If compliance with two or more standards is specified and the standards establish different or conflicting requirements for minimum quantities or quality levels, comply with the most stringent requirement. Refer conflicting requirements that are different, but apparently equal, to Architect for a decision before proceeding.

B. Minimum Quantity or Quality Levels: The quantity or quality level shown or specified shall be the minimum provided or performed. The actual installation may comply exactly with the minimum quantity or quality specified, or it may exceed the minimum within reasonable limits. To comply with these requirements, indicated numeric values are minimum or maximum, as appropriate, for the context of requirements. Refer uncertainties to Architect for a decision before proceeding.

1.4 INFORMATIONAL SUBMITTALS

A. Testing Agency Qualifications: For testing agencies specified in "Quality Assurance" Article to demonstrate their capabilities and experience. Include proof of qualifications in the form of a recent report on the inspection of the testing agency by a recognized authority.

1.5 REPORTS AND DOCUMENTS

A. Test and Inspection Reports: Prepare and submit certified written reports specified in other Sections. Include the following:
   1. Date of issue.
   2. Project title and number.
   3. Name, address, and telephone number of testing agency.
   4. Dates and locations of samples and tests or inspections.
   5. Names of individuals making tests and inspections.
   6. Description of the Work and test and inspection method.
   7. Identification of product and Specification Section.
   8. Complete test or inspection data.
   9. Test and inspection results and an interpretation of test results.

© 2010 Gresham, Smith and Partners. All rights reserved. Use subject to any written agreement with Gresham, Smith and Partners.

10. Record of temperature and weather conditions at time of sample taking and testing and inspecting.
11. Comments or professional opinion on whether tested or inspected Work complies with the Contract Document requirements.
12. Name and signature of laboratory inspector.
13. Recommendations on retesting and reinspecting.

B. Manufacturer's Field Reports: Prepare written information documenting tests and inspections specified in other Sections. Include the following:
1. Name, address, and telephone number of representative making report.
2. Statement on condition of substrates and their acceptability for installation of product.
3. Summary of installation procedures being followed, whether they comply with requirements and, if not, what corrective action was taken.
4. Results of operational and other tests and a statement of whether observed performance complies with requirements.
5. Other required items indicated in individual Specification Sections.

C. Permits, Licenses, and Certificates: For Owner's records, submit copies of permits, licenses, certifications, inspection reports, releases, jurisdictional settlements, notices, receipts for fee payments, judgments, correspondence, records, and similar documents, established for compliance with standards and regulations bearing on performance of the Work.

1.6 QUALITY ASSURANCE

A. General: Qualifications paragraphs in this article establish the minimum qualification levels required; individual Specification Sections specify additional requirements.

B. Manufacturer Qualifications: A firm experienced in manufacturing products or systems similar to those indicated for this Project and with a record of successful in-service performance, as well as sufficient production capacity to produce required units.

C. Fabricator Qualifications: A firm experienced in producing products similar to those indicated for this Project and with a record of successful in-service performance, as well as sufficient production capacity to produce required units.

D. Installer Qualifications: A firm or individual experienced in installing, erecting, or assembling work similar in material, design, and extent to that indicated for this Project, whose work has resulted in construction with a record of successful in-service performance.

E. Professional Engineer Qualifications: A professional engineer who is legally qualified to practice in jurisdiction where Project is located and who is experienced in providing engineering services of the kind indicated. Engineering services are defined as those performed for installations of the system, assembly, or product that are similar to those indicated for this Project in material, design, and extent.

© 2010 Gresham, Smith and Partners. All rights reserved. Use subject to any written agreement with Gresham, Smith and Partners.

F. Specialists: Certain Specification Sections require that specific construction activities shall be performed by entities who are recognized experts in those operations. Specialists shall satisfy qualification requirements indicated and shall be engaged for the activities indicated.
   1. Requirements of authorities having jurisdiction shall supersede requirements for specialists.

G. Testing Agency Qualifications: An NRTL, an NVLAP, or an independent agency with the experience and capability to conduct testing and inspecting indicated, as documented according to ASTM E 329; and with additional qualifications specified in individual Sections; and where required by authorities having jurisdiction, that is acceptable to authorities.
   1. NRTL: A nationally recognized testing laboratory according to 29 CFR 1910.7.
   2. NVLAP: A testing agency accredited according to NIST's National Voluntary Laboratory Accreditation Program.

H. Manufacturer's Representative Qualifications: An authorized representative of manufacturer who is trained and approved by manufacturer to observe and inspect installation of manufacturer's products that are similar in material, design, and extent to those indicated for this Project.

1.7 QUALITY CONTROL

A. Owner Responsibilities: Where quality-control services are indicated as Owner's responsibility, Owner will engage a qualified testing agency to perform these services.
   1. Owner will furnish Contractor with names, addresses, and telephone numbers of testing agencies engaged and a description of types of testing and inspecting they are engaged to perform.
   2. Costs for retesting and reinspecting construction that replaces or is necessitated by work that failed to comply with the Contract Documents will be charged to Contractor.

B. Contractor Responsibilities: Tests and inspections not explicitly assigned to Owner are Contractor's responsibility. Perform additional quality-control activities required to verify that the Work complies with requirements, whether specified or not.
   1. Notify testing agencies at least 24 hours in advance of time when Work that requires testing or inspecting will be performed.
   2. Where quality-control services are indicated as Contractor's responsibility, submit a certified written report, in duplicate, of each quality-control service.

© 2010 Gresham, Smith and Partners. All rights reserved. Use subject to any written agreement with Gresham, Smith and Partners.

3. Testing and inspecting requested by Contractor and not required by the Contract Documents are Contractor's responsibility.
4. Submit additional copies of each written report directly to authorities having jurisdiction, when they so direct.

C. Manufacturer's Field Services: Where indicated, engage a manufacturer's representative to observe and inspect the Work. Manufacturer's representative's services include examination of substrates and conditions, verification of materials, inspection of completed portions of the Work, and submittal of written reports.

D. Retesting/Reinspecting: Regardless of whether original tests or inspections were Contractor's responsibility, provide quality-control services, including retesting and reinspecting, for construction that replaced Work that failed to comply with the Contract Documents.

E. Testing Agency Responsibilities: Cooperate with Construction Manager and Contractor in performance of duties. Provide qualified personnel to perform required tests and inspections.
1. Notify Construction Manager and Contractor promptly of irregularities or deficiencies observed in the Work during performance of its services.
2. Determine the location from which test samples will be taken and in which in-situ tests are conducted.
3. Conduct and interpret tests and inspections and state in each report whether tested and inspected work complies with or deviates from requirements.
4. Submit a certified written report, in duplicate, of each test, inspection, and similar quality-control service through Contractor.
5. Do not release, revoke, alter, or increase the Contract Document requirements or approve or accept any portion of the Work.
6. Do not perform any duties of Contractor.

F. Associated Services: Cooperate with agencies performing required tests, inspections, and similar quality-control services, and provide reasonable auxiliary services as requested. Notify agency sufficiently in advance of operations to permit assignment of personnel. Provide the following:
1. Access to the Work.
2. Incidental labor and facilities necessary to facilitate tests and inspections.
3. Adequate quantities of representative samples of materials that require testing and inspecting. Assist agency in obtaining samples.
4. Facilities for storage and field curing of test samples.
5. Delivery of samples to testing agencies.
6. Preliminary design mix proposed for use for material mixes that require control by testing agency.
7. Security and protection for samples and for testing and inspecting equipment at Project site.

G. Coordination: Coordinate sequence of activities to accommodate required quality-assurance and -control services with a minimum of delay and to avoid necessity of removing and replacing construction to accommodate testing and inspecting.
1. Schedule times for tests, inspections, obtaining samples, and similar activities.

© 2010 Gresham, Smith and Partners. All rights reserved. Use subject to any written agreement with Gresham, Smith and Partners.

PART 2 - PRODUCTS (Not Used)

PART 3 - EXECUTION

3.1 REPAIR AND PROTECTION

A. General: On completion of testing, inspecting, sample taking, and similar services, repair damaged construction and restore substrates and finishes.
   1. Provide materials and comply with installation requirements specified in other Specification Sections or matching existing substrates and finishes. Restore patched areas and extend restoration into adjoining areas with durable seams that are as invisible as possible. Comply with the Contract Document requirements for cutting and patching in Division 01 Section "Execution."

B. Protect construction exposed by or for quality-control service activities.

C. Repair and protection are Contractor's responsibility, regardless of the assignment of responsibility for quality-control services.

END OF SECTION 01 4000

© 2010 Gresham, Smith and Partners. All rights reserved. Use subject to any written agreement with Gresham, Smith and Partners.

PART 1 - GENERAL

1.1 RELATED DOCUMENTS

A. Drawings and general provisions of the Contract, including General and Supplementary Conditions and Division 01 Specification Sections, apply to this Section.

1.2 SUMMARY

A. Section Includes:
1. Demolition and removal of selected portions of building or structure.
2. Salvage of existing items to be reused or recycled.

B. Related Requirements:
1. Division 01 Section "Summary" for restrictions on the use of the premises, Owner-occupancy requirements, and phasing requirements.
2. Division 01 Section "Execution" for cutting and patching procedures.

1.3 DEFINITIONS

A. Remove: Detach items from existing construction and legally dispose of them off-site, unless indicated to be removed and salvaged or removed and reinstalled.

B. Remove and Salvage: Carefully detach from existing construction, in a manner to prevent damage, and deliver to Owner ready for reuse.

C. Remove and Reinstall: Detach items from existing construction, prepare for reuse, and reinstall where indicated.

D. Existing to Remain: Existing items of construction that are not to be permanently removed and that are not otherwise indicated to be removed, removed and salvaged, or removed and reinstalled.

1.4 MATERIALS OWNERSHIP

A. Unless otherwise indicated, demolition waste becomes property of Contractor.

1.5 FIELD CONDITIONS

A. Conditions existing at time of inspection for bidding purpose will be maintained by Owner as far as practical.

B. Notify Architect of discrepancies between existing conditions and Drawings before proceeding with selective demolition.

C. Storage or sale of removed items or materials on-site is not permitted.

© 2010 Gresham, Smith and Partners. All rights reserved. Use subject to any written agreement with Gresham, Smith and Partners.

D. Utility Service: Maintain existing utilities indicated to remain in service and protect them against damage during selective demolition operations.
   1. Maintain fire-protection facilities in service during selective demolition operations.

PART 2 - PRODUCTS

2.1 PEFORMANCE REQUIREMENTS

A. Regulatory Requirements: Comply with governing EPA notification regulations before beginning selective demolition. Comply with hauling and disposal regulations of authorities having jurisdiction.

B. Standards: Comply with ANSI/ASSE A10.6 and NFPA 241.

PART 3 - EXECUTION

3.1 EXAMINATION

A. Verify that utilities have been disconnected and capped before starting selective demolition operations.

B. Survey existing conditions and correlate with requirements indicated to determine extent of selective demolition required.

C. When unanticipated mechanical, electrical, or structural elements that conflict with intended function or design are encountered, investigate and measure the nature and extent of conflict. Promptly submit a written report to Architect.

3.2 UTILITY SERVICES AND MECHANICAL/ELECTRICAL SYSTEMS

A. Existing Services/Systems to Remain: Maintain services/systems indicated to remain and protect them against damage.
   1. Comply with requirements for existing services/systems interruptions specified in Division 01 Section "Summary."

B. Existing Services/Systems to Be Removed, Relocated, or Abandoned: Locate, identify, disconnect, and seal or cap off indicated utility services and mechanical/electrical systems serving areas to be selectively demolished.
   1. Building manager will arrange to shut off indicated services/systems when requested by Contractor.
   2. Arrange to shut off indicated utilities with utility companies.
   3. If services/systems are required to be removed, relocated, or abandoned, provide temporary services/systems that bypass area of selective demolition and that maintain continuity of services/systems to other parts of building.
   4. Disconnect, demolish, and remove fire-suppression systems, plumbing, and HVAC systems, equipment, and components indicated to be removed.

© 2010 Gresham, Smith and Partners. All rights reserved. Use subject to any written agreement with Gresham, Smith and Partners.

a. Piping to Be Removed: Remove portion of piping indicated to be removed and cap or plug remaining piping with same or compatible piping material.
b. Piping to Be Abandoned in Place: Drain piping and cap or plug piping with same or compatible piping material.
c. Equipment to Be Removed: Disconnect and cap services and remove equipment.
d. Equipment to Be Removed and Reinstalled: Disconnect and cap services and remove, clean, and store equipment; when appropriate, reinstall, reconnect, and make equipment operational.
e. Equipment to Be Removed and Salvaged: Disconnect and cap services and remove equipment and deliver to Owner.
f. Ducts to Be Removed: Remove portion of ducts indicated to be removed and plug remaining ducts with same or compatible ductwork material.
g. Ducts to Be Abandoned in Place: Cap or plug ducts with same or compatible ductwork material.

3.3 PREPARATION

A. Temporary Facilities: Provide temporary barricades and other protection required to prevent injury to people and damage to adjacent buildings and facilities to remain.
1. Provide protection to ensure safe passage of people around selective demolition area and to and from occupied portions of building.
2. Protect walls, ceilings, floors, and other existing finish work that are to remain or that are exposed during selective demolition operations.
3. Cover and protect furniture, furnishings, and equipment that have not been removed.
4. Comply with requirements for temporary enclosures, dust control, heating, and cooling specified in Division 01 Section "Temporary Facilities and Controls."

3.4 SELECTIVE DEMOLITION, GENERAL

A. General: Demolish and remove existing construction only to the extent required by new construction and as indicated. Use methods required to complete the Work within limitations of governing regulations and as follows:
1. Neatly cut openings and holes plumb, square, and true to dimensions required. Use cutting methods least likely to damage construction to remain or adjoining construction. Use hand tools or small power tools designed for sawing or grinding, not hammering and chopping, to minimize disturbance of adjacent surfaces. Temporarily cover openings to remain.
2. Cut or drill from the exposed or finished side into concealed surfaces to avoid marring existing finished surfaces.
3. Do not use cutting torches until work area is cleared of flammable materials. At concealed spaces, such as duct and pipe interiors, verify condition and contents of hidden space before starting flame-cutting operations. Maintain portable fire-suppression devices during flame-cutting operations.
4. Maintain adequate ventilation when using cutting torches.
5. Remove decayed, vermin-infested, or otherwise dangerous or unsuitable materials and promptly dispose of off-site.

© 2010 Gresham, Smith and Partners. All rights reserved. Use subject to any written agreement with Gresham, Smith and Partners.

6. Remove structural framing members and lower to ground by method suitable to avoid free fall and to prevent ground impact or dust generation.
7. Dispose of demolished items and materials promptly.

B. Removed and Salvaged Items:
1. Clean salvaged items.
2. Pack or crate items after cleaning. Identify contents of containers.
3. Store items in a secure area until delivery to Owner.
4. Transport items to Owner's storage area designated by Owner.
5. Protect items from damage during transport and storage.

C. Existing Items to Remain: Protect construction indicated to remain against damage and soiling during selective demolition. When permitted by Architect, items may be removed to a suitable, protected storage location during selective demolition and reinstalled in their original locations after selective demolition operations are complete.

3.5 DISPOSAL OF DEMOLISHED MATERIALS

A. General: Except for items or materials indicated to be recycled, reused, salvaged, reinstalled, or otherwise indicated to remain Owner's property, remove demolished materials from Project site.
1. Do not allow demolished materials to accumulate on-site.
2. Remove and transport debris in a manner that will prevent spillage on adjacent surfaces and areas.
3. Comply with requirements specified in Division 01 Section "Construction Waste Management and Disposal."

B. Disposal: Transport demolished materials off Owner's property and legally dispose of them.

3.6 CLEANING

A. Clean adjacent structures and improvements of dust, dirt, and debris caused by selective demolition operations. Return adjacent areas to condition existing before selective demolition operations began.

3.7 SELECTIVE DEMOLITION SCHEDULE

A. Existing Items to Be Removed: Salvage clean ceiling tiles from spaces to be demolished for reuse in existing/to remain spaces.

END OF SECTION 02 4119

© 2010 Gresham, Smith and Partners. All rights reserved. Use subject to any written agreement with Gresham, Smith and Partners.

PART 1 - GENERAL

1.1 RELATED DOCUMENTS

A. Drawings and general provisions of the Contract, including General and Supplementary Conditions and Division 01 Specification Sections, apply to this Section.

1.2 SUMMARY

A. Section includes hydraulic-cement-based, polymer-modified, self-leveling underlayment for application below interior floor coverings.

B. Related Sections:
1. Division 09 Sections for patching and leveling compounds applied with floor coverings.

1.3 ALLOWANCES

A. Furnish and install hydraulic-cement-based underlayment as part of underlayment allowance.

1.4 UNIT PRICES

A. Work of this Section is affected by underlayment unit price.

1.5 SUBMITTALS

A. Product Data: For each type of product indicated.

B. Qualification Data: For qualified Installer.

C. Product Certificates: Signed by manufacturers of underlayment and floor-covering systems certifying that products are compatible.

1.6 QUALITY ASSURANCE

A. Installer Qualifications: Installer who is approved by manufacturer for application of underlayment products required for this Project.

B. Product Compatibility: Manufacturers of underlayment and floor-covering systems certify in writing that products are compatible.

1.7 DELIVERY, STORAGE, AND HANDLING

A. Store materials to comply with manufacturer's written instructions to prevent deterioration from moisture or other detrimental effects.

© 2010 Gresham, Smith and Partners. All rights reserved. Use subject to any written agreement with Gresham, Smith and Partners.

1.8 PROJECT CONDITIONS

A. Environmental Limitations: Comply with manufacturer's written instructions for substrate temperature, ventilation, ambient temperature and humidity, and other conditions affecting underlayment performance.
   1. Place hydraulic-cement-based underlayments only when ambient temperature and temperature of substrates are between 50 and 80 deg F (10 and 27 deg C).

1.9 COORDINATION

A. Coordinate application of underlayment with requirements of floor-covering products and adhesives, specified in Division 09 Sections, to ensure compatibility of products.

PART 2 - PRODUCTS

2.1 HYDRAULIC-CEMENT-BASED UNDERLAYMENTS

A. Underlayment: Hydraulic-cement-based, polymer-modified, self-leveling product that can be applied in minimum uniform thickness of 1/8 inch (3 mm) and that can be feathered at edges to match adjacent floor elevations.
   1. Products: Subject to compliance with requirements, provide one of the following:
      a. BASF Construction Chemicals, Inc.; MBT Mastertop 110 Plus Underlayment.
      b. Bonsal American, an Oldcastle company; ProSpec Level Set 200.
      c. Dayton Superior Corporation; LeveLayer
      d. L&M Construction Chemicals, Inc.; Levelex.
      e. MAPEI Corporation; Novoplan 2.
      f. Maxxon Corporation; Level-Right.
   2. Cement Binder: ASTM C 150, portland cement, or hydraulic or blended hydraulic cement as defined by ASTM C 219.
   3. Compressive Strength: Not less than 4000 psi (27.6 MPa) at 28 days when tested according to ASTM C 109/C 109M.

B. Water: Potable and at a temperature of not more than 70 deg F (21 deg C).

C. Primer: Product of underlayment manufacturer recommended in writing for substrate, conditions, and application indicated.

D. Corrosion-Resistant Coating: Recommended in writing by underlayment manufacturer for metal substrates.

PART 3 - EXECUTION

© 2010 Gresham, Smith and Partners. All rights reserved. Use subject to any written agreement with Gresham, Smith and Partners.

3.1 EXAMINATION

A. Examine substrates, with Installer present, for conditions affecting performance.
   1. Proceed with application only after unsatisfactory conditions have been corrected.

3.2 PREPARATION

A. General: Prepare and clean substrate according to manufacturer's written instructions
   1. Treat nonmoving substrate cracks according to manufacturer's written instructions to prevent cracks from telegraphing (reflecting) through underlayment.
   2. Fill substrate voids to prevent underlayment from leaking.

B. Concrete Substrates: Mechanically remove, according to manufacturer's written instructions, laitance, glaze, efflorescence, curing compounds, form-release agents, dust, dirt, grease, oil, and other contaminants that might impair underlayment bond.
   1. Moisture Testing: Perform anhydrous calcium chloride test, ASTM F 1869. Proceed with installation only after substrates do not exceed a maximum moisture-vapor-emission rate of 3 lb of water/1000 sq. ft. (1.36 kg of water/100 sq. m) in 24 hours.

C. Adhesion Tests: After substrate preparation, test substrate for adhesion with underlayment according to manufacturer's written instructions.

3.3 APPLICATION

A. General: Mix and apply underlayment components according to manufacturer's written instructions.
   1. Close areas to traffic during underlayment application and for time period after application recommended in writing by manufacturer.
   2. Coordinate application of components to provide optimum underlayment-to-substrate and intercoat adhesion.
   3. At substrate expansion, isolation, and other moving joints, allow joint of same width to continue through underlayment.

B. Apply primer over prepared substrate at manufacturer's recommended spreading rate.

C. Apply underlayment to produce uniform, level surface.
   1. Feather edges to match adjacent floor elevations.

D. Cure underlayment according to manufacturer's written instructions. Prevent contamination during application and curing processes.

E. Do not install floor coverings over underlayment until after time period recommended in writing by underlayment manufacturer.

© 2010 Gresham, Smith and Partners. All rights reserved. Use subject to any written agreement with Gresham, Smith and Partners.

F. Remove and replace underlayment areas that evidence lack of bond with substrate, including areas that emit a "hollow" sound when tapped.

3.4 PROTECTION

A. Protect underlayment from concentrated and rolling loads for remainder of construction period.

END OF SECTION 03 5416

© 2010 Gresham, Smith and Partners. All rights reserved. Use subject to any written agreement with Gresham, Smith and Partners.

PART 1 - GENERAL

1.1 RELATED DOCUMENTS

A. Drawings and general provisions of the Contract, including General and Supplementary Conditions and Division 01 Specification Sections, apply to this Section.

1.2 SUMMARY

A. Section Includes:
   1. Silicone joint sealants

B. Related Sections:
   1. Division 07 Section "Expansion Control" for building expansion joints.
   2. Division 09 Section "Gypsum Board" for sealing perimeter joints.

1.3 PRECONSTRUCTION TESTING

A. Preconstruction Field-Adhesion Testing: Before installing sealants, field test their adhesion to Project joint substrates as follows:
   1. Locate test joints where indicated on Project or, if not indicated, as directed by Architect.
   2. Conduct field tests for each application indicated below:
      a. Each kind of sealant and joint substrate indicated.
   3. Notify Architect seven days in advance of dates and times when test joints will be erected.
      a. Test Method: Test joint sealants according to Method A, Field-Applied Sealant Joint Hand Pull Tab, in Appendix X1 in ASTM C 1193 or Method A, Tail Procedure, in ASTM C 1521.
         1) For joints with dissimilar substrates, verify adhesion to each substrate separately; extend cut along one side, verifying adhesion to opposite side. Repeat procedure for opposite side.
   4. Report whether sealant failed to adhere to joint substrates or tore cohesively. Include data on pull distance used to test each kind of product and joint substrate. For sealants that fail adhesively, retest until satisfactory adhesion is obtained.
   5. Evaluation of Preconstruction Field-Adhesion-Test Results: Sealants not evidencing adhesive failure from testing, in absence of other indications of noncompliance with requirements, will be considered satisfactory. Do not use sealants that fail to adhere to joint substrates during testing.

1.4 SUBMITTALS

A. Product Data: For each joint-sealant product indicated.

B. Samples for Initial Selection: Manufacturer's color charts consisting of strips of cured sealants showing the full range of colors available for each product exposed to view.

© 2010 Gresham, Smith and Partners. All rights reserved. Use subject to any written agreement with Gresham, Smith and Partners.

C. Samples for Verification: For each kind and color of joint sealant required, provide Samples with joint sealants in 1/2-inch- (13-mm-) wide joints formed between two 6-inch- (150-mm-) long strips of material matching the appearance of exposed surfaces adjacent to joint sealants.

D. Joint-Sealant Schedule: Include the following information:
   1. Joint-sealant application, joint location, and designation.
   2. Joint-sealant manufacturer and product name.
   3. Joint-sealant formulation.
   4. Joint-sealant color.

E. Qualification Data: For qualified Installer and testing agency.

F. Product Certificates: For each kind of joint sealant and accessory, from manufacturer.

G. Product Test Reports: Based on evaluation of comprehensive tests performed by a qualified testing agency, indicating that sealants comply with requirements.

H. Preconstruction Field-Adhesion Test Reports: Indicate which sealants and joint preparation methods resulted in optimum adhesion to joint substrates based on testing specified in "Preconstruction Testing" Article.

I. Field-Adhesion Test Reports: For each sealant application tested.

J. Warranties: Sample of special warranties.

1.5 QUALITY ASSURANCE

A. Installer Qualifications: Manufacturer's authorized representative who is trained and approved for installation of units required for this Project.

B. Source Limitations: Obtain each kind of joint sealant from single source from single manufacturer.

C. Product Testing: Test joint sealants using a qualified testing agency.
   1. Testing Agency Qualifications: An independent testing agency qualified according to ASTM C 1021 to conduct the testing indicated.

D. Mockups: Install sealant in mockups of assemblies specified in other Sections that are indicated to receive joint sealants specified in this Section. Use materials and installation methods specified in this Section.

© 2010 Gresham, Smith and Partners. All rights reserved. Use subject to any written agreement with Gresham, Smith and Partners.

1.6 PROJECT CONDITIONS

A. Do not proceed with installation of joint sealants under the following conditions:
   1. When ambient and substrate temperature conditions are outside limits permitted by joint-sealant manufacturer or are below 40 deg F (5 deg C)].
   2. When joint substrates are wet.
   3. Where joint widths are less than those allowed by joint-sealant manufacturer for applications indicated.
   4. Where contaminants capable of interfering with adhesion have not yet been removed from joint substrates.

1.7 WARRANTY

A. Special Installer's Warranty: Manufacturer's standard form in which Installer agrees to repair or replace joint sealants that do not comply with performance and other requirements specified in this Section within specified warranty period.
   1. Warranty Period: Two years from date of Substantial Completion.

B. Special Manufacturer's Warranty: Manufacturer's standard form in which joint-sealant manufacturer agrees to furnish joint sealants to repair or replace those that do not comply with performance and other requirements specified in this Section within specified warranty period.
   1. Warranty Period: Five years from date of Substantial Completion.

C. Special warranties specified in this article exclude deterioration or failure of joint sealants from the following:
   1. Movement of the structure caused by structural settlement or errors attributable to design or construction resulting in stresses on the sealant exceeding sealant manufacturer's written specifications for sealant elongation and compression.
   2. Disintegration of joint substrates from natural causes exceeding design specifications.
   3. Mechanical damage caused by individuals, tools, or other outside agents.
   4. Changes in sealant appearance caused by accumulation of dirt or other atmospheric contaminants.

PART 2 - PRODUCTS

2.1 MATERIALS, GENERAL

A. Compatibility: Provide joint sealants, backings, and other related materials that are compatible with one another and with joint substrates under conditions of service and application, as demonstrated by joint-sealant manufacturer based on testing and field experience.

© 2010 Gresham, Smith and Partners. All rights reserved. Use subject to any written agreement with Gresham, Smith and Partners.

2.2 SILICONE JOINT SEALANTS

A. Mildew-Resistant, Single-Component, Nonsag, Neutral-Curing Silicone Joint Sealant: ASTM C 920, Type S, Grade NS, Class 25, for Use NT.
   1. Products: Subject to compliance with requirements, provide one of the following:
      a. Pecora Corporation; 898.
      b. Tremco Incorporated; Tremsil 200 Sanitary.

2.3 MISCELLANEOUS MATERIALS

A. Primer: Material recommended by joint-sealant manufacturer where required for adhesion of sealant to joint substrates indicated, as determined from preconstruction joint-sealant-substrate tests and field tests.

B. Cleaners for Nonporous Surfaces: Chemical cleaners acceptable to manufacturers of sealants and sealant backing materials, free of oily residues or other substances capable of staining or harming joint substrates and adjacent nonporous surfaces in any way, and formulated to promote optimum adhesion of sealants to joint substrates.

C. Masking Tape: Nonstaining, nonabsorbent material compatible with joint sealants and surfaces adjacent to joints.

PART 3 - EXECUTION

3.1 EXAMINATION

A. Examine joints indicated to receive joint sealants, with Installer present, for compliance with requirements for joint configuration, installation tolerances, and other conditions affecting joint-sealant performance.

B. Proceed with installation only after unsatisfactory conditions have been corrected.

3.2 PREPARATION

A. Surface Cleaning of Joints: Clean out joints immediately before installing joint sealants to comply with joint-sealant manufacturer's written instructions and the following requirements:
   1. Remove all foreign material from joint substrates that could interfere with adhesion of joint sealant, including dust, paints (except for permanent, protective coatings tested and approved for sealant adhesion and compatibility by sealant manufacturer), old joint sealants, oil, grease, waterproofing, water repellents, water, surface dirt, and frost.
   2. Clean nonporous joint substrate surfaces with chemical cleaners or other means that do not stain, harm substrates, or leave residues capable of

© 2010 Gresham, Smith and Partners. All rights reserved. Use subject to any written agreement with Gresham, Smith and Partners.

interfering with adhesion of joint sealants. Nonporous joint substrates include the following:
a. Metal.
b. Porcelain enamel.
c. Glazed surfaces of ceramic tile.

B. Joint Priming: Prime joint substrates where recommended by joint-sealant manufacturer or as indicated by preconstruction joint-sealant-substrate tests or prior experience. Apply primer to comply with joint-sealant manufacturer's written instructions. Confine primers to areas of joint-sealant bond; do not allow spillage or migration onto adjoining surfaces.

C. Masking Tape: Use masking tape where required to prevent contact of sealant or primer with adjoining surfaces that otherwise would be permanently stained or damaged by such contact or by cleaning methods required to remove sealant smears. Remove tape immediately after tooling without disturbing joint seal.

3.3 INSTALLATION OF JOINT SEALANTS

A. General: Comply with joint-sealant manufacturer's written installation instructions for products and applications indicated, unless more stringent requirements apply.

B. Sealant Installation Standard: Comply with recommendations in ASTM C 1193 for use of joint sealants as applicable to materials, applications, and conditions indicated.

C. Install sealant backings of kind indicated to support sealants during application and at position required to produce cross-sectional shapes and depths of installed sealants relative to joint widths that allow optimum sealant movement capability.
1. Do not leave gaps between ends of sealant backings.
2. Do not stretch, twist, puncture, or tear sealant backings.
3. Remove absorbent sealant backings that have become wet before sealant application and replace them with dry materials.

D. Install bond-breaker tape behind sealants where sealant backings are not used between sealants and backs of joints.

E. Install sealants using proven techniques that comply with the following and at the same time backings are installed:
1. Place sealants so they directly contact and fully wet joint substrates.
2. Completely fill recesses in each joint configuration.
3. Produce uniform, cross-sectional shapes and depths relative to joint widths that allow optimum sealant movement capability.

© 2010 Gresham, Smith and Partners. All rights reserved. Use subject to any written agreement with Gresham, Smith and Partners.

3.4 CLEANING

A. Clean off excess sealant or sealant smears adjacent to joints as the Work progresses by methods and with cleaning materials approved in writing by manufacturers of joint sealants and of products in which joints occur.

3.5 PROTECTION

A. Protect joint sealants during and after curing period from contact with contaminating substances and from damage resulting from construction operations or other causes so sealants are without deterioration or damage at time of Substantial Completion. If, despite such protection, damage or deterioration occurs, cut out and remove damaged or deteriorated joint sealants immediately so installations with repaired areas are indistinguishable from original work.

3.6 JOINT-SEALANT SCHEDULE

A. Joint-Sealant Application: Mildew-resistant interior joints in vertical surfaces and horizontal nontraffic surfaces.
   1. Joint Sealant Location:
      a. Joints between plumbing fixtures and adjoining walls, floors, and counters.
      b. Tile control and expansion joints where indicated.
      c. Other joints as indicated.
   2. Joint Sealant: Mildew resistant, single component, nonsag, neutral curing, Silicone.
   3. Joint-Sealant Color: Match adjacent material color designated by Architect and as selected by Architect from manufacturer's full range of colors.

END OF SECTION 07 9200

© 2010 Gresham, Smith and Partners. All rights reserved. Use subject to any written agreement with Gresham, Smith and Partners.

PART 1 - GENERAL

1.1 RELATED DOCUMENTS

A. Drawings and general provisions of the Contract, including General and Supplementary Conditions and Division 01 Specification Sections, apply to this Section.

1.2 SUMMARY

A. Section Includes:
   1. Non-load-bearing steel framing systems for interior gypsum board assemblies.

1.3 ACTION SUBMITTALS

A. Product Data: For each type of product indicated, including deflection tables indicating compliance with requirements.

PART 2 - PRODUCTS

2.1 PERFORMANCE REQUIREMENTS

A. Structural Performance: Provide gypsum board assemblies capable of meeting the deflection limits specified in "Framing Systems" article for maximum heights of partitions without failing. Evidence of failure includes deflections exceeding limits indicated, bending stresses causing studs to distort and gypsum board to crack.

2.2 FRAMING SYSTEMS

A. Framing Members, General: Comply with ASTM C 754 for conditions indicated.
   1. Steel Sheet Components: Comply with ASTM C 645 requirements for metal unless otherwise indicated.
   2. Protective Coating: ASTM A 653/A 653M, G60 (Z180), hot-dip galvanized unless otherwise indicated.

B. Studs and Runners: ASTM C 645. Use either steel studs and runners or dimpled steel studs and runners.
   1. Steel Studs and Runners:
      a. Minimum Base-Metal Thickness: 0.018 inch (0.45 mm).
      b. Depth: As indicated on Drawings.
      c. Deflection Limit: L/240.
   2. Dimpled Steel Studs and Runners:
      a. Minimum Base-Metal Thickness: 0.015 inch (0.38 mm).
      b. Depth: As indicated on Drawings.
      c. Deflection Limit: L/240.

C. Slip-Type Head Joints: Where indicated, provide the following:

© 2010 Gresham, Smith and Partners. All rights reserved. Use subject to any written agreement with Gresham, Smith and Partners.

1. Deflection Track: Steel sheet top runner manufactured to prevent cracking of finishes applied to interior partition framing resulting from deflection of structure above; in thickness not less than indicated for studs and in width to accommodate depth of studs.
   a. Products: Subject to compliance with requirements, provide one of the following:
      1) Dietrich Metal Framing; SLP-TRK Slotted Deflection Track.
      2) Steel Network Inc. (The); VertiClip SLD Series.
      3) Superior Metal Trim; Superior Flex Track System (SFT).

D. Flat Strap and Backing Plate: Steel sheet for blocking and bracing in length and width indicated.
   1. Minimum Base-Metal Thickness: 0.054 inch (1.37 mm).

E. Proprietary Flexible Track: Track manufactured to bend to created curved partitions.
   1. Product: Subject to compliance with requirements provide the following:
      a. Flex-Ability Concepts; Flex-C Trac.

F. Proprietary Head/Sill Framing System: Three component framing system for head and/or sill of openings.
   1. Product: Subject to compliance with requirements provide the following:
      a. Brady Brand; ProX Header System: ProX Header, ProX Insert, ProX Clip.

G. Cold-Rolled Channel Bridging: Steel, 0.053-inch (1.34-mm) minimum base-metal thickness, with minimum 1/2-inch- (13-mm-) wide flanges.
   1. Depth: As indicated on Drawings.
   2. Clip Angle: Not less than 1-1/2 by 1-1/2 inches (38 by 38 mm), 0.068-inch- (1.72-mm-) thick, galvanized steel.

H. Hat-Shaped, Rigid Furring Channels: ASTM C 645.
   1. Minimum Base-Metal Thickness: 0.018 inch (0.45 mm).
   2. Depth: 7/8 inch (22.2 mm).

I. Resilient Furring Channels: 1/2-inch- (13-mm-) deep, steel sheet members designed to reduce sound transmission.
   1. Configuration: hat shaped.

J. Cold-Rolled Furring Channels: 0.053-inch (1.34-mm) uncoated-steel thickness, with minimum 1/2-inch- (13-mm-) wide flanges.
   1. Depth: 1-1/2 inch (38 mm).
   2. Furring Brackets: Adjustable, corrugated-edge type of steel sheet with minimum uncoated-steel thickness of 0.033 inch (0.8 mm).
   3. Tie Wire: ASTM A 641/A 641M, Class 1 zinc coating, soft temper, 0.062-inch- (1.59-mm-) diameter wire, or double strand of 0.048-inch- (1.21-mm-) diameter wire.

© 2010 Gresham, Smith and Partners. All rights reserved. Use subject to any written agreement with Gresham, Smith and Partners.

K. Z-Shaped Furring: With slotted or nonslotted web, face flange of 1-1/4 inches (32 mm), wall attachment flange of 7/8 inch (22 mm), minimum uncoated-metal thickness of 0.018 inch (0.45 mm), and depth required to fit insulation thickness indicated.

2.3 SUSPENSION SYSTEMS

A. Tie Wire: ASTM A 641/A 641M, Class 1 zinc coating, soft temper, 0.062-inch- (1.59-mm-) diameter wire, or double strand of 0.048-inch- (1.21-mm-) diameter wire.

B. Hanger Attachments to Concrete:
1. Powder-Actuated Fasteners: Suitable for application indicated, fabricated from corrosion-resistant materials with clips or other devices for attaching hangers of type indicated, and capable of sustaining, without failure, a load equal to 10 times that imposed by construction as determined by testing according to ASTM E 1190 by an independent testing agency.

C. Wire Hangers: ASTM A 641/A 641M, Class 1 zinc coating, soft temper, 0.16 inch (4.12 mm) in diameter.

D. Carrying Channels: Cold-rolled, commercial-steel sheet with a base-metal thickness of 0.053 inch (1.34 mm) and minimum 1/2-inch- (13-mm-) wide flanges.
1. Depth: 1-1/2 inches (38 mm).

E. Furring Channels (Furring Members):
1. Hat-Shaped, Rigid Furring Channels: ASTM C 645, 7/8 inch (22 mm) deep.
a. Minimum Base-Metal Thickness: 0.018 inch (0.45 mm) or 0.033 inch (0.84 mm).

F. Grid Suspension System for Gypsum Board Ceilings: ASTM C 645, direct-hung system composed of main beams and cross-furring members that interlock.
1. Products: Subject to compliance with requirements, provide one of the following:
a. Armstrong World Industries, Inc.; Drywall Grid Systems.
b. Chicago Metallic Corporation; Drywall Grid System.
c. USG Corporation; Drywall Suspension System.

2.4 AUXILIARY MATERIALS

A. General: Provide auxiliary materials that comply with referenced installation standards.
1. Fasteners for Metal Framing: Of type, material, size, corrosion resistance, holding power and other properties required to fasten steel members to substrates.

B. Isolation Strip at Exterior Walls: Provide one of the following:
1. Asphalt-Saturated Organic Felt: ASTM D 226, Type I (No. 15 asphalt felt), nonperforated.

© 2010 Gresham, Smith and Partners. All rights reserved. Use subject to any written agreement with Gresham, Smith and Partners.

2. Foam Gasket: Adhesive-backed, closed-cell vinyl foam strips that allow fastener penetration without foam displacement, 1/8 inch (3.2 mm) thick, in width to suit steel stud size.

PART 3 - EXECUTION

3.1 EXAMINATION

A. Examine areas and substrates, with Installer present, and including welded hollow-metal frames, cast-in anchors, and structural framing, for compliance with requirements and other conditions affecting performance of the Work.

B. Proceed with installation only after unsatisfactory conditions have been corrected.

3.2 PREPARATION

A. Coordination with Sprayed Fire-Resistive Materials:
1. Before sprayed fire-resistive materials are applied, attach offset anchor plates or ceiling runners (tracks) to surfaces indicated to receive sprayed fire-resistive materials.
   a. Where Z-furring clips are required, install 2 inch long clips at 16 inches o.c., unless otherwise indicated.
   b. Where offset anchor plates are required, provide continuous plates fastened to building structure not more than 24 inches (610 mm) o.c.
2. After sprayed fire-resistive materials are applied, remove them only to extent necessary for installation of non-load-bearing steel framing. Do not reduce thickness of fire-resistive materials below that required for fire-resistance ratings indicated. Protect adjacent fire-resistive materials from damage.

3.3 INSTALLATION, GENERAL

A. Installation Standard: ASTM C 754, or U.L. Design for fire-rated assembly.
1. Comply with latest local and governing seismic codes.
2. Portland Cement Plaster Assemblies: Also comply with requirements in ASTM C 1063 that apply to framing installation.
3. Gypsum Board Assemblies: Also comply with requirements in ASTM C 840 that apply to framing installation.

B. Verify that installation of metal stud walls and partitions is coordinated with locations and sizes of plumbing clean-outs and similar piping, fire extinguisher and electrical panels, and other built-in items occurring within the wall.
1. Depth of stud wall shall be adequate to completely enclose piping and cabinets and to maintain integrity of rated installations.

© 2010 Gresham, Smith and Partners. All rights reserved. Use subject to any written agreement with Gresham, Smith and Partners.

C. Install supplementary framing, and blocking to support fixtures, equipment services, heavy trim, grab bars, toilet accessories, furnishings, fold-down shower seats, wall guards, handrails, wall mounted door stops, furnishings, monitors, or similar construction.
   1. Provide horizontal metal bracing as indicated in details, or as required to provide secure attachment.
   2. Provide horizontal blocking as indicated, or as required to provide secure attachment, as follows:
      a. At studs spaced 16 inches o.c. provide Dietrich metal framing's Danback wood blocking plate.
         1) Install with two #8 x 1-1/4 inch self-tapping sheet metal screws at each metal clip connector. Screws must penetrate clip, stud and wood.
      b. At studs spaced less than 16 inches o.c. provide FRT wood blocking.

D. Install bracing at terminations in assemblies.

E. Do not bridge building control and expansion joints with non-load-bearing steel framing members. Frame both sides of joints independently.

3.4 INSTALLING FRAMED ASSEMBLIES

A. Install framing system components according to spacings indicated, but not greater than spacings required by referenced installation standards for assembly types.
   1. Single-Layer Application: Maximum 16 inches (406 mm) o.c. unless otherwise indicated.

B. Where studs are installed directly against exterior masonry walls or dissimilar metals at exterior walls, install isolation strip between studs and exterior wall.

C. Install studs so flanges within framing system point in same direction.

D. Install tracks (runners) at floors and overhead supports. Extend framing full height to structural supports or substrates above suspended ceilings, except where partitions are indicated to terminate at suspended ceilings. Continue framing around ducts penetrating partitions above ceiling.
   1. Slip-Type Head Joints: Where framing extends to overhead structural supports, install to produce joints at tops of framing systems that prevent axial loading of finished assemblies.
   2. Fasten studs to both sides of bottom and top runners.
   3. Door Openings: Screw vertical studs at jambs to jamb anchor clips on door frames; install runner track section (for cripple studs) at head and secure to jamb studs.
      a. Install two studs, minimum 0.0312-inch (20 gage) bare steel thickness, at each jamb, unless otherwise indicated.
      b. Install steel reinforcing as detailed for lead-lined door frames.

© 2010 Gresham, Smith and Partners. All rights reserved. Use subject to any written agreement with Gresham, Smith and Partners.

c. Install cripple studs at head adjacent to each jamb stud, with a minimum 1/2-inch (13-mm) clearance from jamb stud to allow for installation of control joint in finished assembly.
d. Extend jamb studs through suspended ceilings and attach to underside of overhead structure.

4. Grab Bars and Folding Shower Seats:
   a. Install 0.0528 inch thick (16 gage) studs at 8 inches o.c. for full length of grab bar or shower seat plus 16 inches beyond each end.
5. At Wall-Hung Cabinets and/or Casework:
   a. Install 0.0270-inch thick (22 gage) studs at [12] [16] inches o.c. for full width of cabinetwork plus 12 inches beyond on each side of cabinetwork.
6. For Furr-Downs at Wall-Hung Cabinets and/or Casework, for Ducts and Pipes:
   a. Install 0.0179-inch thick (25 gage) studs, 16 inches o.c. prior to installation of ceiling grid so that grid angle will abut vertical portion of furr-down.
      1) Use braced system for depths of 48 inches and over (vertically) and widths 72 inches and over.
      2) Use unbraced system for furr-downs up to 24 inches by 24 inches.
7. For Control Joints:
   a. Install double studs back-to-back to create control joints.
   b. Space control joints 30 feet apart maximum.
   c. See details for dimension and materials between studs.
8. Bracing of Walls Above Ceilings:
   a. Where studs extend above ceilings, but not to structure, brace top with diagonal stud braces at approximately 36 inches o.c.
   b. Attach stud braces to galvanized steel angles secured to bottom side of structure.
   c. Install diagonal bracing at latch side of all door jambs.
9. Hat-Shaped Furring Channels on Walls:
   a. Space 16 inches o.c. vertically or horizontally.
   b. For horizontal application install first channels 4 inches from floor and ceiling lines.
   c. Attach to substrate with suitable fasteners spaces 16 inches o.c. in alternate flanges.
   d. Install asphalt felt isolation strip between furring channel and exterior wall surfaces.

E. Direct Furring:
   1. Screw to wood framing.
   2. Attach to concrete or masonry with stub nails, screws designed for masonry attachment, or powder-driven fasteners spaced 24 inches (610 mm) o.c.

F. Z-Furring Members:
   1. Erect insulation, specified in Division 07 Section "Thermal Insulation," vertically and hold in place with Z-furring members spaced 24 inches (610 mm) o.c.

© 2010 Gresham, Smith and Partners. All rights reserved. Use subject to any written agreement with Gresham, Smith and Partners.

2. Except at exterior corners, securely attach narrow flanges of furring members to wall with concrete stub nails, screws designed for masonry attachment, or powder-driven fasteners spaced 24 inches (610 mm) o.c.
3. At exterior corners, attach wide flange of furring members to wall with short flange extending beyond corner; on adjacent wall surface, screw-attach short flange of furring channel to web of attached channel. At interior corners, space second member no more than 12 inches (305 mm) from corner and cut insulation to fit.

G. Installation Tolerance: Install each framing member so fastening surfaces vary not more than 1/8 inch (3 mm) from the plane formed by faces of adjacent framing.

3.5 FIELD QUALITY CONTROL

A. Periodic special inspection shall be provided by the special inspector, coordinated by the Contractor, during construction of non-load bearing walls per the requirements specified in Division 01 Specification "Structural Tests and Inspections".

END OF SECTION 09 2216

© 2010 Gresham, Smith and Partners. All rights reserved. Use subject to any written agreement with Gresham, Smith and Partners.

PART 1 - GENERAL

1.1 RELATED DOCUMENTS

A. Drawings and general provisions of the Contract, including General and Supplementary Conditions and Division 01 Specification Sections, apply to this Section.

1.2 SUMMARY

A. Section Includes:
1. Interior gypsum board.

B. Related Requirements:
1. Division 09 Section "Non-Structural Metal Framing" for non-structural framing and suspension systems that support gypsum board panels.

1.3 ALTERNATES

A. Refer to Division 01 Section "Alternates" for description of Work in this Section affected by alternates.
1. Provide only paperless gypsum board and joint tape on walls and ceilings throughout project, all interior partitions and inside face of exterior walls.

1.4 DEFINITIONS

A. Wet Area: Where surfaces are soaked, saturated, or regularly and frequently subjected to moisture or liquids, usually water.

B. Limited Water Exposure Area: Where surfaces are subjected to moisture or liquids but do not become soaked or saturated due to system design or time exposure.

1.5 ACTION SUBMITTALS

A. Product Data: For each type of product.

1.6 DELIVERY, STORAGE AND HANDLING

A. Store materials inside under cover and keep them dry and protected against weather, humidity, condensation, direct sunlight, construction traffic, and other potential causes of damage. Stack panels flat and supported on risers on a flat platform to prevent sagging.

© 2010 Gresham, Smith and Partners. All rights reserved. Use subject to any written agreement with Gresham, Smith and Partners.

1.7 FIELD CONDITIONS

A. Environmental Limitations: Comply with ASTM C 840 requirements or gypsum board manufacturer's written recommendations or the following, whichever are more stringent.
   1. Maintain temperature between 50 degrees Fahrenheit (28 degrees Celsius) minimum and 95 degrees Fahrenheit (53 degrees Celsius) maximum for 48 hours prior to gypsum board panel and joint treatment installation and continuously during and after installation.
   2. Maintain humidity below 60 percent for 48 hours prior to gypsum board panel and joint treatment installation and continuously during and after installation.

B. Do not install panels that are wet, those that are moisture damaged, or those that are mold/mildew damaged.
   1. Indications that panels are wet or moisture damaged include, but are not limited to, discoloration, sagging, or irregular shape.
   2. Indications that panels are mold/mildew damaged include, but are not limited to, fuzzy or splotchy surface contamination or discoloration.

C. Do not install interior products until installation areas are enclosed, watertight, and comply with Environmental Limitations paragraphs.

PART 2 - PRODUCTS

2.1 GYPSUM BOARD, GENERAL

A. Size: Provide maximum lengths and widths available that will minimize joints in each area and that correspond with support system indicated.

2.2 INTERIOR GYPSUM BOARD

A. Manufacturers: Subject to compliance with requirements, provide products by one of the following:
   1. CertainTeed Corp.
   2. Georgia-Pacific Gypsum LLC.
   3. Lafarge North America Inc.
   4. National Gypsum Company.
   5. Temple-Inland.
   6. USG Corporation.

B. Gypsum Board, Type X: ASTM C 1396/C 1396M.
   1. Thickness: 5/8 inch (15.9 mm).
   2. Long Edges: Tapered.

© 2010 Gresham, Smith and Partners. All rights reserved. Use subject to any written agreement with Gresham, Smith and Partners.

2.3 TRIM ACCESSORIES

A. Interior Trim: ASTM C 1047.
   1. Material: Galvanized or aluminum-coated steel sheet or rolled zinc. No paper-faced products.
   2. Shapes:
      a. Cornerbead.
      b. LC-Bead: J-shaped; exposed long flange receives joint compound.
      c. Expansion (control) joint.
      d. Curved-Edge Cornerbead: With notched or flexible flanges.

2.4 JOINT TREATMENT MATERIALS

A. General: Comply with ASTM C 475/C 475M.

B. Joint Tape:
   1. Paper-Faced Gypsum Board: Paper.
   2. Glass-Mat-Faced and Paperless Gypsum Board: Fiberglass Mesh.
   3. Glass-Mat Gypsum Sheathing Board: 10-by-10 glass mesh.
   4. Tile Backing Panels: As recommended by panel manufacturer.

C. Joint Compound for Interior Gypsum Board: For each coat use formulation that is compatible with other compounds applied on previous or for successive coats.
   1. Prefilling: At open joints and damaged surface areas, use setting-type taping compound.
   2. Embedding and First Coat: For embedding tape and first coat on joints, fasteners, and trim flanges, use setting-type taping compound.
   3. Fill Coat: For second coat, use drying-type, all-purpose compound.
   4. Finish Coat: For third coat, use drying-type, all-purpose compound.
   5. Skim Coat: For final coat of Level 5 finish. As specified in Division 09 Section "Interior Painting."

D. Joint Compound for Exterior Applications:
   1. Glass-Mat Gypsum Sheathing Board: As recommended by sheathing board manufacturer.

E. Joint Compound for Tile Backing Panels:
   1. Glass-Mat, Water-Resistant Backing Panel: As recommended by backing panel manufacturer.
   2. Cementitious Backer Units: As recommended by backer unit manufacturer.

2.5 AUXILIARY MATERIALS

A. General: Provide auxiliary materials that comply with referenced installation standards and manufacturer's written recommendations.

© 2010 Gresham, Smith and Partners. All rights reserved. Use subject to any written agreement with Gresham, Smith and Partners.

B. Laminating Adhesive: Adhesive or joint compound recommended for directly adhering gypsum panels to continuous substrate.

C. Steel Drill Screws: ASTM C 1002, unless otherwise indicated.
   1. Use screws complying with ASTM C 954 for fastening panels to steel members from 0.033 to 0.112 inch (0.84 to 2.84 mm) thick.

PART 3 - EXECUTION

3.1 EXAMINATION

A. Examine areas and substrates including welded hollow-metal frames and framing, with Installer present, for compliance with requirements and other conditions affecting performance.

B. Examine panels before installation. Reject panels that are wet, moisture damaged or mold damaged.

C. Verify that temperature and humidity requirements specified in "Project Conditions" article will be maintained for duration of project.

D. Proceed with installation only after unsatisfactory conditions have been corrected.

3.2 APPLYING AND FINISHING PANELS, GENERAL

A. Comply with ASTM C 840 and GA-216.
   1. Do not begin installation of gypsum panels until building is weathertight and meets conditioned space requirements specified in article "Field Conditions".

B. Install ceiling panels across framing to minimize the number of abutting end joints and to avoid abutting end joints in central area of each ceiling. Stagger abutting end joints of adjacent panels not less than one framing member. Install ceiling panels to provide light contact at edges and ends with no more than 1/16 inch (1.5 mm) gap between panels.

C. Install panels with face side out. Butt panels together for a light contact at edges and ends with not more than 1/16 inch (1.5 mm) of open space between panels. Do not force into place.
   1. Install panels on high priority walls first and then lesser priority walls as indicated and as required by authorities having jurisdiction.
   2. Install acoustical sealant at electrical boxes, and similar penetrations and at both faces of through penetrations.

D. At Exterior Walls: Where penetrations are necessary in gypsum board seal completely with acoustical sealant.

© 2010 Gresham, Smith and Partners. All rights reserved. Use subject to any written agreement with Gresham, Smith and Partners.

E. At Floor Slab: For rated and non-rated walls leave 1/4 inch minimum, 1/2 inch maximum space between floor slab and bottom edge of gypsum board.

F. At Bottom of Deck (top of panel): Where gypsum board extends to bottom of deck, cope gypsum board to shapes of flutes, irregular shapes, bar joists, precast shapes, etc. to fit tight against deck for final finishing. A maximum gap of 1/4 inch is allowed. Install required sealant/caulk in gap. See drawings for requirements.

G. At Hollow Metal Door and Window Openings:
   1. Install gypsum board with 1/2 inch minimum penetration into throat of door frames and view window frames.
   2. Install all gypsum board vertical, including above framed openings. Joints must be tapered joints (not cut) and not occur at corner of frames, except at control joint locations.

H. Locate edge and end joints over supports, except in ceiling applications where intermediate supports or gypsum board back-blocking is provided behind end joints. Do not place tapered edges against cut edges or ends. Stagger vertical joints on opposite sides of partitions. Do not make joints other than control joints at corners of framed openings.

I. Form control and expansion joints with space between edges of adjoining gypsum panels.

J. Isolate perimeter of gypsum board applied to non-load-bearing partitions at structural abutments, except floors. Provide 1/4- to 1/2-inch- (6.4- to 12.7-mm-) wide spaces at these locations and trim edges with edge trim where edges of panels are exposed. Seal joints between edges and abutting structural surfaces with acoustical sealant.

K. Attachment to Steel Framing: Attach panels so leading edge or end of each panel is attached to open (unsupported) edges of stud flanges first.
   1. Proceed with attachment from board center toward ends and edges.

L. Install sound attenuation blankets before installing gypsum panels unless blankets are readily installed after panels have been installed on one side.

3.3 APPLYING INTERIOR GYPSUM BOARD

A. Single-Layer Application:
   1. On partitions/walls/barriers, apply gypsum panels vertically (parallel to framing), unless otherwise required by fire-resistance-rated assembly, and minimize end joints.
      a. Stagger abutting end joints not less than one framing member in alternate courses of panels.
      b. Locate horizontal joints above finish ceiling, in spaces without a ceiling horizontal joint shall be at 8'-0" (2.4m) minimum above finish floor.
   2. On Z-furring members, apply gypsum panels vertically (parallel to framing) with no end joints. Locate edge joints over furring members.

© 2010 Gresham, Smith and Partners. All rights reserved. Use subject to any written agreement with Gresham, Smith and Partners.

3. Fastening Methods: Apply gypsum panels to supports with steel drill screws.
   a. Attach all gypsum board with screws 3/8 inch to 1/2 inch from edges and space at no more than 8 inches on center at edges and 12 inches on center in the field or to comply with tested assembly, whichever are more stringent. Drive screws so head rests in slight dimple without cutting face surface or fracturing core.
4. Comply with requirements of tested assembly indicated.

3.4 INSTALLING TRIM ACCESSORIES

A. General: For trim with back flanges intended for fasteners, attach to framing with same fasteners used for panels. Otherwise, attach trim according to manufacturer's written instructions.

B. Control Joints: Install control joints according to ASTM C 840 and in specific locations approved by Architect for visual effect.
   1. Install double studs to create control joints, leave 1/2 inch separation between gypsum board panels for installation of control joint units.
   2. For Rated Fire and Smoke Barriers and Non-Rated Smoke Partitions: Construct joints to comply with detail for wall rating.
   3. Routing gypsum board to create joint is <u>not</u> acceptable.

C. Interior Trim: Install in the following locations:
   1. Cornerbead: Use at outside corners unless otherwise indicated.
   2. LC-Bead: Use at exposed panel edges.
   3. Curved-Edge Cornerbead: Use at curved openings.

3.5 FINISHING GYPSUM BOARD

A. General: Treat gypsum board joints, interior angles, edge trim, control joints, penetrations, fastener heads, surface defects, and elsewhere as required to prepare gypsum board surfaces for decoration. Promptly remove residual joint compound from adjacent surfaces.

B. Prefill open joints, rounded or beveled edges and damaged surface areas.

C. Apply joint tape over gypsum board joints, except for trim products specifically indicated as not intended to receive tape.

D. Gypsum Board Finish Levels: Finish panels to levels indicated below and according to ASTM C 840:
   1. Finish paper-faced gypsum board surfaces in accordance with levels noted below and as developed by Gypsum Association finish levels.
      a. Level 1: Walls above finish ceiling in corridors, rooms, spaces, unless otherwise noted.
      b. Level 4: Walls, soffits and ceilings to receive Type I wall covering and paint.

© 2010 Gresham, Smith and Partners. All rights reserved. Use subject to any written agreement with Gresham, Smith and Partners.

1) Primer and its application to surfaces are specified in Division 09 Section "Interior Painting".

2. Finish Level Descriptions:

Level	Description
1	All joints and interior angles shall have tape embedded in joint compound. Surface shall be free of excess joint compound. Tool marks and ridges are acceptable. Where fire rating is required, comply with local governing code requirements.
4	Joints and interior angles shall have tape embedded in joint compound and three separate coats of joint compound applied over all joints, angles, fastener heads, and accessories. All joint compound shall be smooth and free of tool marks and ridges. Surfaces shall be coated with a primer/sealer prior to the application of final finishes.

3. After finishing is completed and before paint or wall covering is applied, inspect walls and make corrections to provide smooth surfaces free from defects.
   a. Walls shall be plumb and true.
   b. All corners shall be plumb and square.

3.6 PROTECTION

A. Protect adjacent surfaces from drywall compound and promptly remove from floors and other non-drywall surfaces. Repair surfaces stained, marred, or otherwise damaged during drywall application.

B. Protect installed products from damage from weather, humidity, condensation, direct sunlight, construction, and other causes during remainder of the construction period.

C. Remove and replace panels that are wet, moisture damaged, or mold damaged.
   1. Indications that panels are wet or moisture damaged include, but are not limited to, discoloration, sagging, or irregular shape.
   2. Indications that panels are mold damaged include, but are not limited to, fuzzy or splotchy surface contamination and discoloration.

END OF SECTION 09 2900

© 2010 Gresham, Smith and Partners. All rights reserved. Use subject to any written agreement with Gresham, Smith and Partners.

PART 1 - GENERAL

1.1 SUMMARY

A. This Section includes acoustical panels and exposed suspension systems for ceilings.

1.2 SUBMITTALS

A. Product Data: For each type of product indicated.

B. Coordination Drawings: Drawn to scale and coordinating acoustical panel ceiling installation with hanger attachment to building structure and ceiling mounted items.

C. Samples: For each exposed finish.

D. Product test reports.

E. Maintenance data.

1.3 QUALITY ASSURANCE

A. Acoustical Testing Agency Qualifications: An independent testing laboratory, or an NVLAP-accredited laboratory.

PART 2 - PRODUCTS

2.1 ACOUSTICAL PANELS, GENERAL

A. Metal Suspension System Standard: Comply with ASTM C 635.

B. Attachment Devices: Size for five times the design load indicated in ASTM C 635, Table 1, "Direct Hung," unless otherwise indicated. Comply with seismic design requirements.
   1. Power-Actuated Fasteners in Concrete: Fastener system of type suitable for application indicated, fabricated from corrosion-resistant materials, with clips or other accessory devices for attaching hangers of type indicated, and with capability to sustain, without failure, a load equal to 10 times that imposed by ceiling construction, as determined by testing per ASTM E 1190, conducted by a qualified testing and inspecting agency.

C. Wire Hangers, Braces, and Ties: Zinc-coated carbon-steel wire; ASTM A 641/A 641M, Class 1 zinc coating, soft temper.
   1. Size: Select wire diameter so its stress at 3 times hanger design load (ASTM C 635, Table 1, "Direct Hung") will be less than yield stress of wire, but provide not less than 0.106-inch- (2.69-mm-) diameter wire.

D. Seismic perimeter stabilizer bars, seismic struts, and seismic clips.

© 2010 Gresham, Smith and Partners. All rights reserved. Use subject to any written agreement with Gresham, Smith and Partners.

E. Metal Edge Moldings and Trim: Type and profile indicated or, if not indicated, manufacturer's standard moldings for edges and penetrations that comply with seismic design requirements; formed from sheet metal of same material, finish, and color as that used for exposed flanges of suspension system runners.

2.2 ACOUSTICAL PANELS FOR ACOUSTICAL PANEL CEILING

A. Basis-of-Design Product: Subject to compliance with requirements, provide Armstrong Cirrus Second Look II, Item No. 510, or a comparable product by one of the following:
1. Armstrong World Industries, Inc.
2. CertainTeed Corporation.
3. USG Interiors, Inc.

B. Color: White.

C. LR: Not less than 0.85.

D. NRC: Not less than 0.65.

E. CAC: Not less than 35.

F. Edge/Joint Detail: Beveled, kerfed and rabbeted long edges and square, butt-on short edges.

G. Thickness: 3/4 inch (19 mm).

H. Modular Size: 24 by 48 inches (610 by 1220 mm).

2.3 METAL SUSPENSION SYSTEM FOR ACOUSTICAL PANEL CEILING

A. Basis-of-Design Product: Subject to compliance with requirements, provide Armstrong World Industries, Inc. product as scheduled, or a comparable product by one of the following.
1. CertainTeed Corporation.
2. Chicago Metallic Corporation.
3. USG Interiors, Inc.

B. Ceiling Grid G-1: Narrow-Face, Capped, Double-Web, Steel Suspension System: Main and cross runners roll formed from cold-rolled steel sheet, prepainted, hot-dip galvanized according to ASTM A 653/A 653M, not less than G30 (Z90) coating designation, with prefinished 9/16-inch (15-mm) wide metal caps on flanges.
1. Product: Armstrong World Industries, Inc.; 9/16 inch Suprafine Grid.
2. Structural Classification: Intermediate-duty system.

© 2010 Gresham, Smith and Partners. All rights reserved. Use subject to any written agreement with Gresham, Smith and Partners.

3. End Condition of Cross Runners: Override (stepped) or butt-edge type.
4. Face Design: Flat, flush.
5. Cap Material: Steel cold-rolled sheet.
6. Cap Finish: Painted white.

PART 3 - EXECUTION

3.1 INSTALLATION

A. Comply with ASTM C 636 and seismic design requirements indicated, per manufacturer's written instructions and CISCA's "Ceiling Systems Handbook."

B. Measure each ceiling area and establish layout of acoustical panels to balance border widths at opposite edges of each ceiling. Avoid using less-than-half-width panels at borders.

C. Suspend ceiling hangers from building's structural members, plumb and free from contact with insulation or other objects within ceiling plenum. Splay hangers only where required to miss obstructions; offset resulting horizontal forces by bracing, countersplaying, or other equally effective means. Where width of ducts and other construction within ceiling plenum produces hanger spacings that interfere with location of hangers, use trapezes or equivalent devices. When steel framing does not permit installation of hanger wires at spacing required, install carrying channels or other supplemental support for attachment of hanger wires.
   1. Do not support ceilings directly from permanent metal forms or floor deck; anchor into concrete slab.
   2. Do not attach hangers to steel deck tabs.

D. Install edge moldings and trim of type indicated at perimeter of acoustical ceiling area and where necessary to conceal edges of acoustical panels. Screw attach moldings to substrate at intervals not more than 16 inches (400 mm) o.c. and not more than 3 inches (75 mm) from ends, leveling with ceiling suspension system to a tolerance of 1/8 inch in 12 feet (3.2 mm in 3.6 m). Miter corners accurately and connect securely.

E. Install suspension system runners so they are square and securely interlocked with one another. Remove and replace dented, bent, or kinked members.

F. Install acoustical panels with undamaged edges and fit accurately, with no visible gaps, into suspension system runners and edge moldings. Scribe and cut panels at borders and penetrations to provide a neat, precise fit.

© 2010 Gresham, Smith and Partners. All rights reserved. Use subject to any written agreement with Gresham, Smith and Partners.

3.2 CEILING SYSTEM SCHEDULE:

Ceiling System	Panel	Grid	Hold-Down Clips
AT-1	AP-[#]	G-[#]	[Yes] [No]

NOTE: See Reflected Ceiling Plan for locations of ceiling systems.

END OF SECTION 09 5113

© 2010 Gresham, Smith and Partners. All rights reserved. Use subject to any written agreement with Gresham, Smith and Partners.

PART 1 - GENERAL

1.1 RELATED DOCUMENTS

A. Drawings and general provisions of the Contract, including General and Supplementary Conditions and Division 01 Specification Sections, apply to this Section.

1.2 SUMMARY

A. Section includes modular, fusion-bonded carpet tile.

B. Related Requirements:
1. Division 02 Section "Selective Structure Demolition" for removing existing floor coverings.
2. Division 09 Section "Resilient Base and Accessories" for resilient wall base and accessories installed with carpet tile.

1.3 ACTION SUBMITTALS

A. Product Data: For each type of product.
1. Include manufacturer's written data on physical characteristics, durability, and fade resistance.
2. Include installation recommendations for each type of substrate.

B. Samples: For each of the following products and for each color and texture required. Label each Sample with manufacturer's name, material description, color, pattern, and designation indicated on Drawings and in schedules.
1. Carpet Tile: Full-size Sample.

C. Product Schedule: For carpet tile. Use same designations indicated on Drawings.

1.4 INFORMATIONAL SUBMITTALS

A. Qualification Data: For Carpet Tile and Concrete Sealer Installer.

B. Product Test Reports: For carpet tile, for tests performed by a qualified testing agency.

C. Concrete Vapor Sealer Manufacturer's Statement: Stating that concrete vapor sealer manufacturer warrants that flooring adhesive will bond to concrete vapor sealer.

D. Sample Warranty: For special warranty.

1.5 CLOSEOUT SUBMITTALS

© 2010 Gresham, Smith and Partners. All rights reserved. Use subject to any written agreement with Gresham, Smith and Partners.

A. Maintenance Data: For carpet tiles to include in maintenance manuals. Include the following:
   1. Methods for maintaining carpet tile, including cleaning and stain-removal products and procedures and manufacturer's recommended maintenance schedule.
   2. Precautions for cleaning materials and methods that could be detrimental to carpet tile.

1.6 MAINTENANCE MATERIAL SUBMITTALS

A. Furnish extra materials, from the same product run, that match products installed and that are packaged with protective covering for storage and identified with labels describing contents.
   1. Carpet Tile: Full-size units equal to 5 percent of amount installed for each type indicated, but not less than 10 sq. yd. (8.3 sq. m). Store in location as directed by Owner.

1.7 QUALITY ASSURANCE

A. Installer Qualifications: An experienced installer who is certified by the International Certified Floorcovering Installers Association at the Commercial II certification level.

1.8 DELIVERY, STORAGE, AND HANDLING

A. Comply with CRI 104.

1.9 FIELD CONDITIONS

A. Comply with CRI 104 for temperature, humidity, and ventilation limitations.

B. Environmental Limitations: Do not deliver or install carpet tiles until spaces are enclosed and weathertight, wet work in spaces is complete and dry, and ambient temperature and humidity conditions are maintained at occupancy levels during the remainder of the construction period.

C. Where demountable partitions or other items are indicated for installation on top of carpet tiles, install carpet tiles before installing these items.

1.10 WARRANTY

A. Special Warranty for Carpet Tiles: Manufacturer agrees to repair or replace components of carpet tile installation that fail in materials or workmanship within specified warranty period.
   1. Warranty does not include deterioration or failure of carpet tile due to unusual traffic, failure of substrate, vandalism, or abuse.
   2. Failures include, but are not limited to, more than 10 percent edge raveling, snags, runs, loss of face fiber, and delamination.
   3. Warranty Period: 10 years from date of Substantial Completion.

© 2010 Gresham, Smith and Partners. All rights reserved. Use subject to any written agreement with Gresham, Smith and Partners.

PART 2 - PRODUCTS

2.1 CARPET TILE

A. Products: Subject to compliance with requirements, provide one of the following:
   1. Blueridge Modular; Expressions E900T.
      a. Pattern and Color: As indicated in Finish Legend Schedule.
      b. Source: Blueridge Commercial Carpet, 1546 Progress Road, Ellijay, Georgia 30540, 1-800-241-5945.

B. Pile Thickness: .105 inches for finished carpet tile according to ASTM D 6859.

C. Stitches: 10 per inch.

D. Gage: 1/12 per inch.

2.2 INSTALLATION ACCESSORIES

A. Trowelable Leveling and Patching Compounds: Latex-modified, hydraulic-cement-based formulation provided or recommended by carpet tile manufacturer.

B. Adhesives: Water-resistant, mildew-resistant, nonstaining, pressure-sensitive type to suit products and subfloor conditions indicated, that complies with flammability requirements for installed carpet tile and is recommended by carpet tile manufacturer for releasable installation.

PART 3 - EXECUTION

3.1 EXAMINATION

A. Examine substrates, areas, and conditions, with Installer present, for compliance with requirements for maximum moisture content, alkalinity range, installation tolerances, and other conditions affecting carpet tile performance. Examine carpet tile for type, color, pattern, and potential defects.

B. Concrete Subfloors: Verify that concrete slabs comply with ASTM F 710 and the following:
   1. Slab substrates are dry and free of curing compounds, sealers, hardeners, residual adhesive, adhesive removers, and other materials that may interfere with adhesive bond. Determine adhesion and dryness characteristics by performing bond and moisture tests recommended by carpet tile manufacturer.
   2. Subfloor finishes comply with requirements specified in Division 03 Section "Cast-in-Place Concrete" for slabs receiving carpet tile.
   3. Subfloors are free of cracks, ridges, depressions, scale, and foreign deposits.

C. Proceed with installation only after unsatisfactory conditions have been corrected.

3.2 PREPARATION

© 2010 Gresham, Smith and Partners. All rights reserved. Use subject to any written agreement with Gresham, Smith and Partners.

A. General: Comply with CRI 104, Section 6.2, "Site Conditions; Floor Preparation," and with carpet tile manufacturer's written installation instructions for preparing substrates indicated to receive carpet tile installation.

B. Use trowelable leveling and patching compounds, according to manufacturer's written instructions, to fill cracks, holes, depressions, and protrusions in substrates. Fill or level cracks, holes and depressions 1/8 inch (3 mm) wide or wider and protrusions more than 1/32 inch (0.8 mm) unless more stringent requirements are required by manufacturer's written instructions.

C. Remove coatings, including curing compounds, and other substances that are incompatible with adhesives and that contain soap, wax, oil, or silicone, without using solvents. Use mechanical methods recommended in writing by carpet tile manufacturer.

D. Broom and vacuum clean substrates to be covered immediately before installing carpet tile.

3.3 INSTALLATION

A. General: Comply with CRI 104, Section 14, "Carpet Modules," and with carpet tile manufacturer's written installation instructions.

B. Installation Method: As recommended in writing by carpet tile manufacturer.

C. Maintain dye lot integrity. Do not mix dye lots in same area.

D. Cut and fit carpet tile to butt tightly to vertical surfaces, permanent fixtures, and built-in furniture including cabinets, pipes, outlets, edgings, thresholds, and nosings. Bind or seal cut edges as recommended by carpet tile manufacturer.

E. Extend carpet tile into toe spaces, door reveals, closets, open-bottomed obstructions, removable flanges, alcoves, and similar openings.

F. Maintain reference markers, holes, and openings that are in place or marked for future cutting by repeating on finish flooring as marked on subfloor. Use nonpermanent, nonstaining marking device.

G. Install pattern parallel to walls and borders.

3.4 CLEANING AND PROTECTION

A. Perform the following operations immediately after installing carpet tile:
   1. Remove excess adhesive, seam sealer, and other surface blemishes using cleaner recommended by carpet tile manufacturer.
   2. Remove yarns that protrude from carpet tile surface.
   3. Vacuum carpet tile using commercial machine with face-beater element.

© 2010 Gresham, Smith and Partners. All rights reserved. Use subject to any written agreement with Gresham, Smith and Partners.

B. Protect installed carpet tile to comply with CRI 104, Section 16, "Protecting Indoor Installations."

C. Protect carpet tile against damage from construction operations and placement of equipment and fixtures during the remainder of construction period. Use protection methods indicated or recommended in writing by carpet tile manufacturer.

END OF SECTION 09 6813

© 2010 Gresham, Smith and Partners. All rights reserved. Use subject to any written agreement with Gresham, Smith and Partners.

PART 1 - GENERAL

1.1 SUMMARY

A. This Section includes surface preparation and the application of paint systems on the following interior substrates:
   1. Wood.
   2. Gypsum board.

1.2 SUBMITTALS

A. Product Data: For each type of product indicated.

B. Samples: For each finish and for each color and texture required.

C. Product List: Printout of current "MPI Approved Products List" for each product category specified in Part, with the proposed product highlighted.

PART 2 - PRODUCTS

2.1 PAINT, GENERAL

A. Material Compatibility:
   1. Provide materials for use within each paint system that are compatible with one another and substrates indicated, under conditions of service and application as demonstrated by manufacturer, based on testing and field experience.
   2. For each coat in a paint system, provide products recommended in writing by manufacturers of topcoat for use in paint system and on substrate indicated.

B. VOC Content of Field-Applied Interior Paints and Coatings: Provide products that comply with the following limits for VOC content, exclusive of colorants added to a tint base, when calculated according to 40 CFR 59, Subpart D (EPA Method 24); these requirements do not apply to paints and coatings that are applied in a fabrication or finishing shop:
   1. Flat Paints, Coatings, and Primers: VOC content of not more than 50 g/L.
   2. Nonflat Paints, Coatings, and Primers: VOC content of not more than 150 g/L.
   3. Anti-Corrosive and Anti-Rust Paints Applied to Ferrous Metals: VOC not more than 250 g/L.
   4. Floor Coatings: VOC not more than 100 g/L.
   5. Shellacs, Clear: VOC not more than 730 g/L.
   6. Shellacs, Pigmented: VOC not more than 550 g/L.
   7. Flat Topcoat Paints: VOC content of not more than 50 g/L.
   8. Nonflat Topcoat Paints: VOC content of not more than 150 g/L.
   9. Anti-Corrosive and Anti-Rust Paints Applied to Ferrous Metals: VOC not more than 250 g/L.
   10. Floor Coatings: VOC not more than 100 g/L.
   11. Shellacs, Clear: VOC not more than 730 g/L.

© 2010 Gresham, Smith and Partners. All rights reserved. Use subject to any written agreement with Gresham, Smith and Partners.

12. Shellacs, Pigmented: VOC not more than 550 g/L.
13. Primers, Sealers, and Undercoaters: VOC content of not more than 200 g/L.
14. Dry-Fog Coatings: VOC content of not more than 400 g/L.
15. Zinc-Rich Industrial Maintenance Primers: VOC content of not more than 340 g/L.
16. Pre-Treatment Wash Primers: VOC content of not more than 420 g/L.

C. Chemical Components of Field-Applied Interior Paints and Coatings: Provide topcoat paints and anti-corrosive and anti-rust paints applied to ferrous metals that comply with the following chemical restrictions; these requirements do not apply to paints and coatings that are applied in a fabrication or finishing shop:
1. Aromatic Compounds: Paints and coatings shall not contain more than 1.0 percent by weight of total aromatic compounds (hydrocarbon compounds containing one or more benzene rings).
2. Restricted Components: Paints and coatings shall not contain any of the following:
   a. Acrolein.
   b. Acrylonitrile.
   c. Antimony.
   d. Benzene.
   e. Butyl benzyl phthalate.
   f. Cadmium.
   g. Di (2-ethylhexyl) phthalate.
   h. Di-n-butyl phthalate.
   i. Di-n-octyl phthalate.
   j. 1,2-dichlorobenzene.
   k. Diethyl phthalate.
   l. Dimethyl phthalate.
   m. Ethylbenzene.
   n. Formaldehyde.
   o. Hexavalent chromium.
   p. Isophorone.
   q. Lead.
   r. Mercury.
   s. Methyl ethyl ketone.
   t. Methyl isobutyl ketone.
   u. Methylene chloride.
   v. Naphthalene.
   w. Toluene (methylbenzene).
   x. 1,1,1-trichloroethane.
   y. Vinyl chloride.

D. Colors: As indicated in Finish Schedule.

2.2 BLOCK FILLERS

A. Interior/Exterior Latex Block Filler: Waterborne, high solids, emulsion type pigmented coating with bridging and filling properties for interior or exterior concrete masonry units.

© 2010 Gresham, Smith and Partners. All rights reserved. Use subject to any written agreement with Gresham, Smith and Partners.

1. Benjamin Moore; Moorecraft Super Craft Latex Block Filler No. 285-01.
2. Coronado Paint; Super Kote 5000 Commercial Latex Block Filler No. 946-11.
3. Duron; Dura Crete H.P. Acrylic Block Filler No. 16-110.
4. ICI Paints; Devoe Coatings Bloxfil Acrylic Block Filler No. 4000-1000.
5. PPG; Speedhide Int/Ext. Latex Block Filler No. 6-15.
6. Sherwin-Williams; PrepRite Int/Ext Block Filler No. B25W25.

B. Epoxy Block Filler: Solvent based, two component, epoxy, high solids coating for unfilled, interior and exterior block surfaces.
1. Coronado Paint; Polyamide Epoxy Block Filler No. 101-11.
2. ICI Paints; Devoe Coatings Bar-Rust 231 No. 231.
3. PPG; Aquapon Epoxy Block Filler No. 97-685.
4. Sherwin-Williams; Industrial & Marine Kem Cati-Coat HS Epoxy Filler/Sealer No. B42W400/V400 S

2.3 PRIMERS/SEALERS

A. Interior Latex Primer/Sealer: White, pigmented, waterborne latex sealer used on new interior plaster, concrete and gypsum wallboard surfaces.
1. Benjamin Moore; Regal First Coat Latex Primer/Undercoater No. 216.
2. Coronado Paint; Super Kote 5000 Latex Primer-Sealer No. 40-11.
3. Duron; Interior Acrylic Drywall Primer No. 04-124.
4. Duron; Interior Acrylic Latex Undercoater No. 04-123.
5. ICI Paints; Prep-N-Prime Interior Latex Wall Primer No. 1000-1200.
6. PPG; Speedhide Int. Latex Primer Sealer No. 6-2.
7. Sherwin-Williams; PrepRite 400 Interior Latex Primer No. B28W400.

B. Wood-Knot Sealer: Sealer recommended in writing by topcoat manufacturer for use in paint systems indicated.

2.4 WOOD PRIMERS

A. Interior Latex-Based Wood Primer: Latex based primer for use on interior surfaces such as doors, casings, and trim where odor or VOC concerns may not permit the use of solvent-based products.
1. Benjamin Moore; Fresh Start Interior/Exterior Primer No. 023.
2. Coronado Paint; Grip & Seal Stain Killing Primer No. 116-11.
3. Duron; American Paints Terminator T2 WB Primer/Sealer No. 71-218.
4. ICI Paints; Prep-N-Prime 100% Acrylic Latex Primer No. 2000-1200.
5. PPG; Seal Grip Plastic Primer (Waterborne) No. 17-921.
6. Sherwin-Williams; PrepRite ProBlock Int/Ext Latex Primer/Sealer No. B51W20.

2.5 LATEX PAINTS

A. Institutional Low-Odor/VOC Latex (Flat): White or colored latex paint with low odor characteristics and a VOC of less than 10 grams per liter.
1. Benjamin Moore; Pristine Eco Spec Int. Latex Flat No. 219.
2. ICI Paints (Canada); CIL Select-Int. Acrylic Velvet Flat No. 7100.
3. M.A.B. Paints; Enviro Pure Latex Flat No. 040.

© 2010 Gresham, Smith and Partners. All rights reserved. Use subject to any written agreement with Gresham, Smith and Partners.

4. PPG; Pure Performance Interior Latex Flat No. 9-100.
5. Sherwin-Williams; Harmony Interior Latex Flat No. B5W951.

B. Institutional Low-Odor/VOC Latex (Low Sheen): White or colored latex paint with low odor characteristics and a VOC of less than 10 grams per liter.
1. Benjamin Moore; Pristine Eco Spec Int. Latex Eggshell Enamel No. 223.
2. ICI Paints (Canada); CIL Select - Int. Acrylic Eggshell No. 7150.
3. M.A.B. Paints; Enviro Pure Latex Eggshell No. 045.
4. PPG; Pure Performance Interior Eggshell Latex No. 9-300.
5. Sherwin-Williams; Harmony Interior Latex Eg-Shel No. B9W951.

C. Institutional Low-Odor/VOC Latex (Semigloss): White or colored latex paint with low odor characteristics and a VOC of less than 10 grams per liter.
1. Benjamin Moore; Pristine Eco Spec Int. Latex Semi-Gloss Enamel No. 224.
2. Duron; Genesis Odor Free High-Performance Int. Latex S.G. No. 83-914.
3. ICI Paints; Lifemaster 2000 Interior Semi-Gloss No. LM 9200.
4. PPG; Pure Performance Interior Semi-Gloss Latex No. 9-500.
5. Sherwin-Williams; Harmony Interior Latex Semi-Gloss No. B10W951.

D. High-Performance Architectural Latex (Low Sheen): High performance architectural latex coating, Gloss Level 2 (a 'velvet-like' finish).
1. ICI Paints (Canada); ICI Dulux Int. Acrylic low Sheen Eggshell No. 14030.
2. Sherwin-Williams; Superpaint Interior Latex Satin No. B20WQ8010.

E. High-Performance Architectural Latex (Semigloss): High performance architectural latex coating, Gloss Level 5 - Semi-Gloss.
1. Benjamin Moore; Benjamin Moore DTM Acrylic Semi-Gloss No. M29-1B.
2. ICI Paints; Dulux Professional Semi-Gloss Int. Wall and Trim Enamel No. 1406-0110.
3. PPG; Speedhide Int. Semi-Gloss Latex No. 6-500.
4. Sherwin-Williams; Industrial & Marine Sher-Cryl HPA Semi-Gloss No. B66W351.

2.6 EPOXY PAINTS

A. Epoxy Cold Cured Gloss: Solvent based, gloss, two component, epoxy/polyamide coating for wall and floor surfaces.
1. Benjamin Moore; Polyamide Epoxy Coating No. CM36.
2. Coronado Paint; Polyamide Epoxy Coating No. 101 Line.
3. ICI Paints; Devoe/Fuller Guardcote No. DP34UXX.
4. PPG; Aquapon Epoxy Cold Cured Gloss No. 95-1.
5. Sherwin-Williams; Industrial & Marine Tile Clad High Solids No. B62WZ series.

B. Interior/Exterior Epoxy W.B.: Waterborne, two component epoxy type, finish coating for prepared interior and exterior surfaces.
1. Benjamin Moore; Acrylic Epoxy Gloss "A"; Hardener "B" No. M43/M44.
2. Coronado Paint; Water-based Amine Adduct Epoxy No. 142 Line.
3. ICI Paints; Devoe Coatings Tru-Glaze Acrylic Epoxy Coating No. 4418.
4. PPG; Aquapon Waterborne Epoxy No. 98-1/98-98.

© 2010 Gresham, Smith and Partners. All rights reserved. Use subject to any written agreement with Gresham, Smith and Partners.

5. Sherwin-Williams; Industrial & Marine Water Based Catalyzed Epoxy No. B70W Series.

PART 3 - EXECUTION

3.1 EXAMINATION

A. Examine substrates and conditions, with Applicator present, for compliance with requirements for maximum moisture content and other conditions affecting performance of work.

B. Maximum Moisture Content of Substrates: When measured with an electronic moisture meter as follows:
1. Concrete: 12 percent.
2. Masonry (Clay and CMU): 12 percent.
3. Wood: 15 percent.
4. Gypsum Board: 12 percent.
5. Plaster: 12 percent.

C. Verify suitability of substrates, including surface conditions and compatibility with existing finishes and primers.

D. Begin coating application only after unsatisfactory conditions have been corrected and surfaces are dry.
1. Beginning coating application constitutes Contractor's acceptance of substrates and conditions.

3.2 PREPARATION AND APPLICATION

A. Comply with manufacturer's written instructions and recommendations applicable to substrates indicated.

B. Clean substrates of substances that could impair bond of paints, including dirt, oil, grease, and incompatible paints and encapsulants.
1. Remove incompatible primers and reprime substrate with compatible primers as required to produce paint systems indicated.

C. Apply paints to produce surface films without cloudiness, spotting, holidays, laps, brush marks, roller tracking, runs, sags, ropiness, or other surface imperfections. Cut in sharp lines and color breaks.

D. Painting Mechanical and Electrical Work: Paint items exposed in equipment rooms and occupied spaces including, but not limited to, the following:
1. Mechanical Work:
a. Uninsulated metal piping.
b. Uninsulated plastic piping.
c. Pipe hangers and supports.
d. Tanks that do not have factory-applied final finishes.

© 2010 Gresham, Smith and Partners. All rights reserved. Use subject to any written agreement with Gresham, Smith and Partners.

e. Visible portions of internal surfaces of metal ducts, without liner, behind air inlets and outlets.
f. Duct, equipment, and pipe insulation having cotton or canvas insulation covering or other paintable jacket material.
g. Mechanical equipment that is indicated to have a factory-primed finish for field painting.

2. Electrical Work:
   a. Switchgear.
   b. Panelboards.
   c. Electrical equipment that is indicated to have a factory-primed finish for field painting.

E. Protect work of other trades against damage from paint application. Correct damage to work of other trades by cleaning, repairing, replacing, and refinishing, as approved by Architect, and leave in an undamaged condition.

F. At completion of construction activities of other trades, touch up and restore damaged or defaced painted surfaces.

G. In spaces without ceilings locate stencil 10 feet minimum above finish floor to bottom of stencil. Stencil must be visible; not hidden behind ductwork, equipment, or other obstacles.

3.3 INTERIOR PAINTING SCHEDULE

A. Dressed Lumber Substrates: Including architectural woodwork.
   1. Institutional Low-Odor/VOC Latex System:
      a. Prime Coat: Interior latex-based wood primer.
      b. Intermediate Coat: Institutional low-odor/VOC interior latex matching topcoat.
      c. Topcoat: Institutional low-odor/VOC interior latex (eggshell).

B. Gypsum Board Substrates (paint finish):
   1. Institutional Low-Odor/VOC Latex System:
      a. Prime Coat: Interior latex primer/sealer.
      b. Intermediate Coat: Institutional low-odor/VOC interior latex matching topcoat.
      c. Topcoat: Institutional low-odor/VOC interior latex (low sheen).

C. Exposed Pipes: Paint exposed piping for identification in addition to labels required in other Sections as follows:
   1. Natural Gas Piping: Safety Purple (ANSI Z535 Color Chart); Sherwin Williams No. 6981, Passionate Purple.
   2. Propane Piping: Safety Red (ANSI Z535 Color Chart); Sherwin Williams No. 4081, Safety Red.
   3. Fuel Oil Piping: Safety Brown (ANSI Z535 Color Chart); Sherwin Williams No. 4001, Bolt Brown.
   4. Steam Piping: Safety Orange (ANSI Z535 Color Chart); Sherwin Williams No. 4083, Safety Orange.

© 2010 Gresham, Smith and Partners. All rights reserved. Use subject to any written agreement with Gresham, Smith and Partners.

5. Standpipe and Sprinkler Piping: Red; Sherwin Williams No. 6866, Heartthrob.
6. Steam Condensate Piping: Light Orange; Sherwin Williams No. 6345, Sumptuous Peach.
7. Chilled Water Piping: Pale Green; Sherwin Williams No. 6189, Opaline.
8. Condensor Water Piping: Blue-Green; Sherwin Williams No. 6502, Loch Blue.
9. Heating Hot Water Piping: Pink; Sherwin Williams No. 6303, Rose Colored.
10. Domestic Cold Water Piping: Dark Blue; Sherwin Williams No. 6244, Naval.
11. Domestic Hot Water Piping: Rose Red; Sherwin Williams No. 6863, Lusty Red.

END OF SECTION 09 9123

© 2010 Gresham, Smith and Partners. All rights reserved. Use subject to any written agreement with Gresham, Smith and Partners.

PART 1 - GENERAL

1.1 RELATED DOCUMENTS

A. Drawings and general provisions of the Contract, including General and Supplementary Conditions and Division 01 Specification Sections, apply to this Section.

1.2 SUMMARY

A. Section Includes:
1. Steel toilet compartments configured as toilet enclosures, entrance screens, and urinal screens.

B. Related Sections:
1. Division 05 Section "Metal Fabrications" for supports that attach floor-and-ceiling-anchored compartments to overhead structural system.
2. Division 10 Section "Toilet, and Bath Accessories" for toilet tissue dispensers, grab bars, purse shelves, and similar accessories.

1.3 SUBMITTALS

A. Product Data: For each type of product indicated. Include construction details, material descriptions, dimensions of individual components and profiles, and finishes.

B. Shop Drawings: For toilet compartments. Include plans, elevations, sections, details, and attachments to other work.
1. Show locations of cutouts for compartment-mounted toilet accessories.
2. Show locations of reinforcements for compartment-mounted grab bars.
3. Show locations of centerlines of toilet fixtures.
4. Show ceiling grid and overhead support or bracing locations.

C. Samples for Initial Selection: For each type of unit indicated. Include Samples of hardware and accessories involving material and color selection.

D. Samples for Verification: For the following products, in manufacturer's standard sizes unless otherwise indicated:
1. Each type of material, color, and finish required for units, prepared on 6-inch (152-mm) square Samples of same thickness and material indicated for Work.
2. Each type of hardware and accessory.

E. Product Certificates: For each type of toilet compartment, from manufacturer.

F. Maintenance Data: For toilet compartments to include in maintenance manuals.

© 2010 Gresham, Smith and Partners. All rights reserved. Use subject to any written agreement with Gresham, Smith and Partners.

1.4 QUALITY ASSURANCE

A. Comply with requirements in GSA's CID-A-A-60003, "Partitions, Toilets, Complete."

B. Source Limitations: Obtain toilet enclosures, screens and accessories through one source from a single manufacturer.

C. Regulatory Requirements: Comply with applicable provisions in the U.S. Architectural & Transportation Barriers Compliance Board's "Americans with Disabilities Act (ADA) and Architectural Barriers Act (ABA) Accessibility Guidelines for Buildings and Facilities" and ICC/ANSI A117.1 for toilet compartments designated as accessible.

1.5 PROJECT CONDITIONS

A. Field Measurements: Verify actual locations of toilet fixtures, walls, columns, ceilings, and other construction contiguous with toilet compartments by field measurements before fabrication.

PART 2 - PRODUCTS

2.1 MATERIALS

A. Aluminum Castings: ASTM B 26/B 26M.

B. Aluminum Extrusions: ASTM B 221 (ASTM B 221M).

C. Steel Sheet: Commercial steel sheet for exposed applications; mill phosphatized and selected for smoothness.
1. Electrolytically Zinc Coated: ASTM A 879/A 879M, 01Z (03G).
2. Hot-Dip Galvanized: ASTM A 653/A 653M, either hot-dip galvanized or galvannealed.

D. Stainless-Steel Sheet: ASTM A 666, Type 304, stretcher-leveled standard of flatness.

E. Stainless-Steel Castings: ASTM A 743/A 743M.

F. Zamac: ASTM B 86, commercial zinc-alloy die castings.

G. Particleboard: ANSI A208.1, Grade M-2 with 45-lb (20.4-kg) density, made with binder containing no urea formaldehyde.

H. Plastic Laminate: NEMA LD 3, general-purpose HGS grade, 0.048-inch (1.2-mm) nominal thickness.

I. Solid-Surfacing Material: Homogeneous solid sheets of filled plastic resin complying with ISSFA-2.

© 2010 Gresham, Smith and Partners. All rights reserved. Use subject to any written agreement with Gresham, Smith and Partners.

2.2 STEEL UNITS

A. Manufacturers: Subject to compliance with requirements, provide products by one of the following:
   1. Bradley Corporation; Mills Partitions.
   2. Global Steel Products Corp.
   3. Sanymetal; a Crane Plumbing Company.

B. Toilet-Enclosure Style: Floor anchored.

C. Urinal-Screen Style: Wall hung with integral flanges.

D. Door, Panel, and Pilaster Construction: Seamless, metal facing sheets pressure laminated to core material; with continuous, interlocking molding strip or lapped-and-formed edge closures; corners secured by welding or clips and exposed welds ground smooth. Provide with no-sightline system. Exposed surfaces shall be free of pitting, seam marks, roller marks, stains, discolorations, telegraphing of core material, or other imperfections.
   1. Core Material: Manufacturer's standard sound-deadening honeycomb of resin-impregnated kraft paper in thickness required to provide finished thickness of 1 inch (25 mm) for doors and panels and 1-1/4 inches (32 mm) for pilasters.
   2. Grab-Bar Reinforcement: Provide concealed internal reinforcement for grab bars mounted on units.
   3. Tapping Reinforcement: Provide concealed reinforcement for tapping (threading) at locations where machine screws are used for attaching items to units.

E. Urinal-Screen Construction:
   1. Integral-Flange, Wall-Hung Urinal Screen: Similar to panel construction, with integral full-height flanges for wall attachment, and maximum 1-1/4 inches (32 mm) thick.

F. Facing Sheets and Closures: Electrolytically coated or hot-dip galvanized-steel sheet with nominal base-metal (uncoated) thicknesses as follows:
   1. Pilasters, Braced at Both Ends: Manufacturer's standard thickness, but not less than 0.036 inch (0.91 mm).
   2. Panels: Manufacturer's standard thickness, but not less than 0.030 inch (0.76 mm).
   3. Doors: Manufacturer's standard thickness, but not less than 0.030 inch (0.76 mm).
   4. Integral-Flange, Wall-Hung Urinal Screens: Manufacturer's standard thickness, but not less than 0.030 inch (0.76 mm).

G. Pilaster Shoes and Sleeves (Caps): Stainless-steel sheet, not less than 0.031inch (0.79-mm) nominal thickness and 3 inches (76 mm) high, finished to match hardware.

H. Brackets (Fittings):
   1. Stirrup Type: Ear or U-brackets; chrome-plated zamac.

© 2010 Gresham, Smith and Partners. All rights reserved. Use subject to any written agreement with Gresham, Smith and Partners.

I. Steel-Sheet Finish: Immediately after cleaning and pretreating, apply manufacturer's standard baked-on finish, including thermosetting, electrostatically applied, and powder coatings. Comply with coating manufacturer's written instructions for applying and baking. Apply one color in each room.
   1. Color: As selected by Architect from manufacturer's full range.

2.3 ACCESSORIES

A. Hardware and Accessories: Manufacturer's standard design, heavy-duty operating hardware and accessories.
   1. Material: Chrome-plated zamac or clear-anodized aluminum.
   2. Hinges: Manufacturer's standard paired, self-closing type that can be adjusted to hold doors open at any angle up to 90 degrees.
   3. Latch and Keeper: Manufacturer's standard surface-mounted lever handle latch unit designed for emergency access and with combination rubber-faced door strike and keeper. Provide units that comply with regulatory requirements for accessibility at compartments designated as accessible.
   4. Coat Hook: Manufacturer's standard combination hook and rubber-tipped bumper, sized to prevent in-swinging door from hitting compartment-mounted accessories. At accessible toilet compartments mount at 4'-5" above finished floor to top of hook.
   5. Door Bumper: Manufacturer's standard rubber-tipped bumper at out-swinging doors and entrance-screen doors.
   6. Door Pull: Manufacturer's standard unit at out-swinging doors that complies with regulatory requirements for accessibility. Provide units on both sides of doors at compartments designated as accessible.

B. Anchorages and Fasteners: Manufacturer's standard exposed fasteners of stainless steel or chrome-plated steel or brass, finished to match the items they are securing, with theft-resistant-type heads. Provide sex-type bolts for through-bolt applications. For concealed anchors, use stainless steel, hot-dip galvanized steel, or other rust-resistant, protective-coated steel.

2.4 FABRICATION

A. Floor-Anchored Units: Provide manufacturer's standard corrosion-resistant anchoring assemblies with leveling adjustment nuts at pilasters for structural connection to floor. Provide shoes at pilasters to conceal anchorage.

© 2010 Gresham, Smith and Partners. All rights reserved. Use subject to any written agreement with Gresham, Smith and Partners.

B. Door Size and Swings: Unless otherwise indicated, provide 24-inch (610-mm) wide in-swinging doors for standard toilet compartments and 36-inch (914-mm) wide out-swinging doors with a minimum 32-inch (813-mm) wide clear opening for compartments designated as accessible.

PART 3 - EXECUTION

3.1 INSTALLATION

A. General: Comply with manufacturer's written installation instructions. Install units rigid, straight, level, and plumb. Secure units in position with manufacturer's recommended anchoring devices.
   1. Maximum Clearances:
      a. Pilasters and Panels: 1/2 inch (13 mm).
      b. Panels and Walls: 1 inch (25 mm).
   2. Stirrup Brackets: Secure panels to walls and to pilasters with no fewer than three brackets attached at midpoint and near top and bottom of panel.
      a. Locate wall brackets so holes for wall anchors occur in masonry or tile joints.
      b. Align brackets at pilasters with brackets at walls.

B. Floor-Anchored Units: Set pilasters with anchors penetrating not less than 2 inches (51 mm) into structural floor unless otherwise indicated in manufacturer's written instructions. Level, plumb, and tighten pilasters. Hang doors and adjust so tops of doors are level with tops of pilasters when doors are in closed position.

C. Urinal Screens: Attach with anchoring devices to suit supporting structure. Set units level and plumb, rigid, and secured to resist lateral impact.

3.2 ADJUSTING

A. Hardware Adjustment: Adjust and lubricate hardware according to hardware manufacturer's written instructions for proper operation. Set hinges on in-swinging doors to hold doors open approximately 30 degrees from closed position when unlatched. Set hinges on out-swinging doors, doors at 3'-0" wide accessible toilet compartments and doors in entrance screens to return doors to fully closed position.

END OF SECTION 10 2113

© 2010 Gresham, Smith and Partners. All rights reserved. Use subject to any written agreement with Gresham, Smith and Partners.

PART 1 - GENERAL

1.1 RELATED DOCUMENTS

A. Drawings and general provisions of the Contract, including General and Supplementary Conditions and Division 01 Specification Sections, apply to this Section.

1.2 SUMMARY

A. Section Includes:
1. Toilet and bath accessories.

1.3 SUBMITTALS

A. Product Data: For each type of product indicated. Include the following:
1. Construction details and dimensions.
2. Anchoring and mounting requirements, including requirements for cutouts in other work and substrate preparation.
3. Material and finish descriptions.
4. Features that will be included for Project.
5. Manufacturer's warranty.

B. Maintenance Data: For toilet and bath accessories to include in maintenance manuals.

C. Warranty: Sample of special warranty.

1.4 COORDINATION

A. Coordinate accessory locations with other work to prevent interference with clearances required for access by people with disabilities, and for proper installation, adjustment, operation, cleaning, and servicing of accessories.

B. Deliver inserts and anchoring devices set into concrete or masonry as required to prevent delaying the Work.

1.5 WARRANTY

A. Special Mirror Warranty: Manufacturer's standard form in which manufacturer agrees to replace mirrors that develop visible silver spoilage defects and that fail in materials or workmanship within specified warranty period.
1. Warranty Period: 15 years from date of Substantial Completion.

PART 2 - PRODUCTS

© 2010 Gresham, Smith and Partners. All rights reserved. Use subject to any written agreement with Gresham, Smith and Partners.

2.1 MATERIALS

A. Stainless Steel: ASTM A 666, Type 304, 0.031-inch (0.8-mm) minimum nominal thickness unless otherwise indicated.

B. Steel Sheet: ASTM A 1008/A 1008M, Designation CS (cold rolled, commercial steel), 0.036-inch (0.9-mm) minimum nominal thickness.

C. Galvanized-Steel Sheet: ASTM A 653/A 653M, with G60 (Z180) hot-dip zinc coating.

D. Galvanized-Steel Mounting Devices: ASTM A 153/A 153M, hot-dip galvanized after fabrication.

E. Fasteners: Screws, bolts, and other devices of same material as accessory unit and tamper-and-theft resistant where exposed, and of galvanized steel where concealed.

F. Chrome Plating: ASTM B 456, Service Condition Number SC 2 (moderate service).

G. Mirrors: ASTM C 1503, Mirror Glazing Quality, clear-glass mirrors, nominal 6.0 mm thick.

H. ABS Plastic: Acrylonitrile-butadiene-styrene resin formulation.

2.2 TOILET AND BATH ACCESSORIES

A. Basis-of-Design Product: The design for accessories is based on products indicated. Subject to compliance with requirements, provide the named product or a comparable product by one of the following:
   1. American Specialties, Inc.
   2. Bobrick Washroom Equipment, Inc.
   3. Bradley Corporation.
   4. GAMCO Specialty Accessories; a division of Bobrick Washroom Equipment, Inc.

B. Toilet Tissue (Roll) Dispenser A2:
   1. Basis-of-Design Product: Bobrick Washroom Equipment, Inc; B-2888.
   2. Description: Roll-in-reserve dispenser with hinged front secured with tumbler lockset. Spare roll drops into place after bottom roll is emptied.
   3. Mounting: Surface mounted.
   4. Operation: Noncontrol delivery with theft-resistant spindle.
   5. Capacity: Designed for 5-1/4 inch (133 mm) diameter tissue rolls.
   6. Material and Finish: Stainless steel, No. 4 finish (satin).

© 2010 Gresham, Smith and Partners. All rights reserved. Use subject to any written agreement with Gresham, Smith and Partners.

C. Paper Towel (Folded) Dispenser B1:
   1. Basis-of-Design Product: Bobrick Washroom Equipment, Inc; B-262.
   2. Mounting: Surface mounted.
   3. Minimum Capacity: 400 C-fold or 525 multifold towels.
   4. Material and Finish: Stainless steel, No. 4 finish (satin).
   5. Lockset: Tumbler type.
   6. Refill Indicators: Pierced slots at sides or front.

D. Mirror Unit without shelf H2:
   1. Basis-of-Design Product: Bobrick Washroom Equipment, Inc; B-290.
   2. Frame: Stainless-steel angle, 0.05 inch (1.3 mm) thick.
      a. Corners: Welded and ground smooth.
   3. Hangers: Produce rigid, tamper- and theft-resistant installation, using method indicated below.
      a. Wall bracket of galvanized steel, equipped with concealed locking devices requiring a special tool to remove.
   4. Size: As indicated on Drawings or in Schedule.

E. Robe Hook K1:
   1. Basis-of-Design Product: Bobrick Washroom Equipment, Inc; B-671.
   2. Description: Single-prong unit.
   3. Material and Finish: Stainless steel, No. 7 finish (polished).
   4. Mounting: Concealed wall plate.

F. Grab Bar Q5:
   1. Basis-of-Design Product: Bobrick Washroom Equipment, Inc; B-6806x36.
   2. Mounting: Flanges with concealed fasteners. Horizontal mount.
      a. For toilet partition mounting provide Bobrick Anchor No. 2583, for each flange.
   3. Material: Stainless steel, 0.05 inch (1.3 mm) thick.
      a. Finish: Smooth, No. 4, satin finish.
   4. Outside Diameter: 1-1/2 inches (38 mm).
   5. Configuration and Length: Straight, 36 inches (914 mm) long.

G. Grab Bar Q7:
   1. Basis-of-Design Product: Bobrick Washroom Equipment, Inc; B-6806x42.
   2. Mounting: Flanges with concealed fasteners. Horizontal mount.
   3. Material: Stainless steel, 0.05 inch (1.3 mm) thick.
      a. Finish: Smooth, No. 4, satin finish.
   4. Outside Diameter: 1-1/2 inches (38 mm).
   5. Configuration and Length: Straight, 42 inches (1067 mm) long.

H. Grab Bar Q11:
   1. Basis-of-Design Product: Bobrick Washroom Equipment, Inc.; B-6806 x 18
   2. Mounting: Flanges with concealed fasteners. Vertical mount.

© 2010 Gresham, Smith and Partners. All rights reserved. Use subject to any written agreement with Gresham, Smith and Partners.

3. Material: Stainless steel, 0.05 inch (1.3 mm) thick.
   a. Finish: Smooth, No. 4, satin finish.
4. Outside Diameter: 1-1/2 inches (38 mm).
5. Configuration and Length: Straight, 18 inches (457 mm) long.

2.3 UNDERLAVATORY GUARDS

A. Manufacturers: Subject to compliance with requirements, provide products by one of the following:
   1. Plumberex Specialty Products, Inc.
   2. TCI Products.
   3. Truebro, Inc.

B. Underlavatory Guard V1:
   1. Description: Insulating pipe covering for supply and drain piping assemblies that prevent direct contact with and burns from piping, and allow service access without removing coverings.
   2. Material and Finish: Antimicrobial, molded-plastic, white.

2.4 FABRICATION

A. General: Fabricate units with tight seams and joints, and exposed edges rolled. Hang doors and access panels with full-length, continuous hinges. Equip units for concealed anchorage and with corrosion-resistant backing plates.

B. Framed Glass-Mirror Units: Fabricate frames for glass-mirror units to accommodate glass edge protection material. Provide mirror backing and support system that permits rigid, tamper-resistant glass installation and prevents moisture accumulation.
   1. Provide galvanized steel backing sheet, not less than 0.034 inch (0.85 mm) and full mirror size, with non-absorbent filler material. Corrugated cardboard is not an acceptable filler material.

C. Keys: Provide universal keys for internal access to accessories for servicing and resupplying. Provide minimum of six keys to Owner's representative.

PART 3 - EXECUTION

3.1 INSTALLATION

A. Install accessories according to manufacturers' written instructions, using fasteners appropriate to substrate indicated and recommended by unit manufacturer. Install units level, plumb, and firmly anchored in locations and at heights indicated.

B. Confirm attachment (mechanical or adhesive) and reinforcement requirements of all accessories, including Owner-Furnished/Contractor-Installed (OF/CI) and Owner Furnished/Owner Installed (OF/OI).

© 2010 Gresham, Smith and Partners. All rights reserved. Use subject to any written agreement with Gresham, Smith and Partners.

C. Grab Bars and Folding Shower Seats: Install to withstand a downward load of at least 500 lbf (2224 N), when tested according to method in ASTM F 446.

3.2 ADJUSTING AND CLEANING

A. Adjust accessories for unencumbered, smooth operation. Replace damaged or defective items.

B. Remove temporary labels and protective coatings.

C. Clean and polish exposed surfaces according to manufacturer's written recommendations.

END OF SECTION 10 2800

© 2010 Gresham, Smith and Partners. All rights reserved. Use subject to any written agreement with Gresham, Smith and Partners.

PART 1 - GENERAL

1.1 RELATED DOCUMENTS

A. Drawings and general provisions of the Contract, including General and Supplementary Conditions and Division 01 Specification Sections, apply to this Section.

1.2 SUMMARY

A. General Requirements specifically applicable to Division 26, in addition to Division 01 provisions.

1.3 COORDINATION

A. Coordinate the Work specified in this Division under provisions of applicable Sections of Division 01.

B. Prepare drawings showing proposed rearrangement of Work to meet job conditions, including changes to Work specified under other Sections. Obtain written permission from the Engineer before proceeding.

C. Electrical drawings are diagrammatic and shall not be scaled for exact locations. If requested, any outlet or device shall be relocated up to six feet in any direction prior to rough in with no change in price.

D. Coordinate the installation of electrical items including, but not limited to, conduits, outlet boxes, and fixture mounting studs in precast concrete structural elements. All such electrical items shall be installed in precast forms before concrete is poured. Surface mounting of such electrical boxes, devices, or conduit shall not be permitted unless specifically noted on the Drawings.

E. The Contractor shall include all Bowling Green Municipal Utilities fees and charges associated with providing both temporary and permanent electrical service.

1.4 REFERENCES

A. NFPA-70 2005 - National Electrical Code

B. NFPA-90A 2002 - Installation of Air Conditioning and Ventilation Systems

C. NFPA-101 2006 - Life Safety Code

D. International Building Code 2006

E. ADA - Americans with Disabilities Act (1992)

© 2010 Gresham, Smith and Partners. All rights reserved. Use subject to any written agreement with Gresham, Smith and Partners.

1.5 REGULATORY REQUIREMENTS

A. Conform to ANSI/NFPA 70 and all other applicable NFPA codes.

B. Conform to all applicable Building Codes.

C. Obtain all required electrical permits and inspections from Authority Having Jurisdiction. Pay all associated fees.

D. Completed electrical work shall meet requirements of the Occupational Safety and Health Act of 2006, its subsequent amendments, and interpretations of the Act promulgated by Occupational Safety and Health Administration of the Department of Labor.

1.6 GENERAL SCOPE OF ELECTRICAL WORK

A. The scope of electrical work is defined by these Specifications and Drawings. If the Specifications and/or the Drawings are in conflict, the Contractor shall notify the Engineer, before proceeding with that portion of the work, for an interpretation of precedence. The Contractor pricing shall reflect the more expensive option when a conflict cannot be resolved prior to bidding.

B. Provide all electrical systems in complete working order.

C. Provide concrete foundations, curbs, housekeeping pads, lighting pole bases, duct banks, etc., required for the installation of electrical equipment as specified under other Sections. Provide 4-inch housekeeping curbs under the footprint of all floor-mounted switchboards, panelboards, motor control centers, transformers, and any other item indicated on the drawings. Curb to extend 2-inches beyond equipment footprint on all sides. Provide1/2- inch chamfer.

D. Provide cutting and patching required for electrical installation as specified under other Sections. All patching shall maintain rating of the wall or floor where it occurs.

E. The Contractor shall arrange for temporary electrical service as indicated on the Drawings. Provide temporary lighting and receptacles for construction. The Contractor shall arrange for orderly transfer between temporary and permanent electrical services. All temporary wiring shall be installed in a neat and workmanlike manner. Comply with NEC for all temporary wiring. Remove all temporary wiring after permanent installation is complete and operational.

F. All equipment shall be installed in accordance with manufacturer's recommendations. Where conflicts occur between Contract Documents and these recommendations, a ruling shall be requested of the Engineer.

G. Protect work and materials from damage by weather, entrance of water and dirt. Cap conduit during installation in an approved manner. Taping shall be unacceptable. Avoid damage to materials and equipment in place. Satisfactorily repair or remove

© 2010 Gresham, Smith and Partners. All rights reserved. Use subject to any written agreement with Gresham, Smith and Partners.

and replace damaged work with new materials. Deliver equipment and materials to job site in original, unopened, labeled containers. Store ferrous materials to prevent rusting. Store materials and equipment to prevent staining and discoloring. All material shall be stored in or under a permanent structure.

H. Provide equipment and/or wiring normally furnished or required for complete electrical systems but not specifically specified on the drawings or in specifications, as though specified by both.

I. Execution of contract is evidence that Contractor has examined all drawings and specifications related to Work, has visited the site, inspected areas to be renovated, and is informed to extent and character of Work.

J. In event that project is occupied or systems placed in operation in several phases at Owner's request, guarantee and warranty will begin on date each system or item of equipment is accepted by Owner.

K. All starters not furnished as an integral part of mechanical and plumbing equipment shall be provided as specified under Division 26. Starters which are an integral part of a control panel provided with the mechanical and plumbing equipment (compressors, vacuum pumps, etc.) or starters which are furnished as a standard for the equipment (i.e., chillers, compressors, vacuum pumps, etc.) shall be by Division 23.

1.7 QUALITY ASSURANCE

A. The Contractor shall employ personnel that have been regularly engaged in electrical installation work of similar size projects. The Contractor must be able to demonstrate experience with design and installation of electrical equipment by similar size projects at the request of the Engineer.

B. Provide and/or be an active party to a meaningful Quality Assurance program. To assist the Contractor in this program, the specifications contained herein are set forth as the minimum acceptable Quality Assurance requirements. This does not relieve the Contractor from executing other Quality Assurance measures to obtain a complete operating facility within the scope of this project.

C. The Contractor shall insure that all workmanship, all materials employed, all required equipment and the manner and method of installation conform to accepted construction and engineering practices, and that each piece of equipment is in satisfactory working condition to satisfactorily perform its functional operation.

1.8 WARRANTY

A. The entire electrical system, including all material, components and equipment furnished under this Division, and all installation furnished under this Division shall be fully warranted for one year minimum under applicable provisions of Division 01.

© 2010 Gresham, Smith and Partners. All rights reserved. Use subject to any written agreement with Gresham, Smith and Partners.

Provide longer warranty period where specified for items where required by other sections of this specification.

1.9 SUBMITTALS

A. Submit inspection and permit certificates under provisions of applicable Sections of Division 01.

B. Include certificate of final inspection and acceptance from all authorities having jurisdiction.

C. Electrical power distribution studies are required to be submitted along with power distribution system equipment submittals. Refer to Division 26 Section "Power Distribution Equipment Studies".

PART 2 - PRODUCTS

2.1 MATERIALS AND EQUIPMENT

A. Materials and Equipment: Acceptable to the authorities having jurisdiction as suitable for the use intended.

B. All material shall be UL listed where such labels are available. Provide additional listings for items where required in the specifications.

C. All material shall be new, unless specifically indicated on the drawings as existing to be reused.

PART 3 - EXECUTION

3.1 WORKMANSHIP

A. Install work in a workmanlike manner using procedures defined in NECA Standard of Installation.

B. Provide flashing and/or pitch pockets at all conduit penetrations of the roof.

C. Arrange for chases, slots or openings in other building components during progress of construction, to allow for electrical installation.

END OF SECTION 26 0500

© 2010 Gresham, Smith and Partners. All rights reserved. Use subject to any written agreement with Gresham, Smith and Partners.

PART 1 - GENERAL

1.1 RELATED DOCUMENTS

A. Drawings and general provisions of the Contract, including General and Supplementary Conditions and Division 01 Specification Sections, apply to this Section.

1.2 SUMMARY

A. This Section includes the following:
1. Building wires and cables rated 600 V and less.
2. Connectors, splices, and terminations rated 600 V and less.
3. Sleeves and sleeve seals for cables.

1.3 DEFINITIONS

A. EPDM: Ethylene-propylene-diene terpolymer rubber.

B. NBR: Acrylonitrile-butadiene rubber.

1.4 SUBMITTALS

A. Product Data: For each type of product indicated.

B. Qualification Data: For testing agency.

1.5 QUALITY ASSURANCE

A. Electrical Components, Devices, and Accessories: Listed and labeled as defined in NFPA 70, Article 100, by a testing agency acceptable to authorities having jurisdiction, and marked for intended use.

B. Comply with NFPA 70.

PART 2 - PRODUCTS

2.1 CONDUCTORS AND CABLES

A. Manufacturers: Subject to compliance with requirements, provide products by one of the following:
1. American Insulated Wire Corp.; a Leviton Company.
2. General Cable Corporation.
3. Senator Wire & Cable Company.
4. Southwire Company.
5. Or approved equal.

B. Copper Conductors: Comply with NEMA WC 70.

© 2010 Gresham, Smith and Partners. All rights reserved. Use subject to any written agreement with Gresham, Smith and Partners.

C. Conductor Insulation: Comply with NEMA WC 70 for Types THHN-THWN and XHHW.

D. Multiconductor Cable: Comply with NEMA WC 70 for tray table, Type TC, with ground wire.

2.2 CONNECTORS AND SPLICES

A. Manufacturers: Subject to compliance with requirements, provide products by one of the following:
1. AFC Cable Systems, Inc.
2. Hubbell Power Systems, Inc.
3. O-Z/Gedney; EGS Electrical Group LLC.
4. 3M; Electrical Products Division.
5. AMP, Inc.
6. Or approved equal.

B. Description: Factory-fabricated connectors and splices of size, ampacity rating, material, type, and class for application and service indicated.

2.3 SLEEVES FOR CABLES

A. Steel Pipe Sleeves: ASTM A 53/A 53M, Type E, Grade B, Schedule 40, galvanized steel, plain ends.

B. Coordinate sleeve selection and application with selection and application of firestopping.

PART 3 - EXECUTION

3.1 CONDUCTOR MATERIAL APPLICATIONS

A. Feeders: Copper, unless otherwise noted on drawings. Solid for No. 10 AWG and smaller; stranded for No. 8 AWG and larger.

B. Branch Circuits: Copper. Solid for No. 10 AWG and smaller; stranded for No. 8 AWG and larger.

3.2 CONDUCTOR INSULATION AND MULTICONDUCTOR CABLE APPLICATIONS AND WIRING METHODS

A. Service Entrance: Type THHN-THWN, single conductors in raceway.

B. Exposed Feeders: Type THHN-THWN, single conductors in raceway.

C. Feeders Concealed in Ceilings, Walls, Partitions, and Crawlspaces: Type THHN-THWN, single conductors in raceway.

© 2010 Gresham, Smith and Partners. All rights reserved. Use subject to any written agreement with Gresham, Smith and Partners.

D. Feeders Concealed in Concrete, below Slabs-on-Grade, and Underground: Type THHN-THWN, single conductors in raceway.

E. Branch Circuits Concealed in Ceilings, Walls, and Partitions: Type THHN-THWN, single conductors in raceway.

F. Branch Circuits Concealed in Concrete, below Slabs-on-Grade, and Underground: Type THHN-THWN, single conductors in raceway.

G. Cord Drops and Portable Appliance Connections: Type SO, hard service cord.

H. Class 1 Control Circuits: Type THHN-THWN, in raceway.

I. Class 2 Control Circuits: Type THHN-THWN, in raceway.

J. Light fixture wiring shall be suitable for the environmental conditions and temperatures to which the conductors will be subjected.

3.3 INSTALLATION OF CONDUCTORS AND CABLES

A. Conceal cables in finished walls, ceilings, and floors in dry, finished locations, unless otherwise indicated.

B. Use manufacturer-approved pulling compound or lubricant where necessary; compound used must not deteriorate conductor or insulation. Do not exceed manufacturer's recommended maximum pulling tensions and sidewall pressure values.

C. Use pulling means, including fish tape, cable, rope, and basket-weave wire/cable grips, that will not damage cables or raceway.

D. Identify and color-code conductors and cables according to Division 26 Section "Identification for Electrical Systems."

E. Use no wire smaller than #12 AWG for power and lighting circuits except for tap conductors between light fixture terminal connections and its outlet box (fixture tails) in accordance with NEC Article 410 which may be #14 AWG. Use no wire smaller than #14 AWG for control wiring. Refer to drawings for additional sizing information.

F. Use #10 AWG conductor for 20 ampere, 120 volt branch circuit with total circuit length longer than 75 feet.

G. Neatly train and lace wiring inside boxes, equipment and panelboards.

H. Make conductor lengths for parallel circuits equal.

I. Branch circuit homeruns to panelboards may be grouped into four wire branch circuits, with three phase conductors, and a common neutral provided that each of

© 2010 Gresham, Smith and Partners. All rights reserved. Use subject to any written agreement with Gresham, Smith and Partners.

the three phase conductors originate from different phases in the same panelboard. No more than three circuits with shared neutral shall be installed in a single homrun conduit without permission of the Design Professional of Record. Grouping of conductors with non-linear loads may require oversizing the neutral. All proposed grouping shall be submitted to the Architect for approval prior to installation. The Contractor shall increase the neutral size if directed by the Design Professional of Record.

J. Do not install more than one feeder circuit in a conduit.

K. Do not exceed the maximum bending radius recommended by the manufacturer of the conductor.

3.4 CONNECTIONS

A. Tighten electrical connectors and terminals according to manufacturer's published torque-tightening values. If manufacturer's torque values are not indicated, use those specified in UL 486A and UL 486B.

B. Make splices and taps that are compatible with conductor material and that possess equivalent or better mechanical strength and insulation ratings than unspliced conductors.

C. Wiring at Outlets: Install conductor at each outlet, with at least 6 inches (150 mm) of slack.

D. For solid copper wire #10 AWG and smaller, use insulated spring wire connectors.

E. Use compression connectors equal to 3M Scotchlok 10,000 Series for splices and taps 8 AWG and larger. Tape uninsulated conductors and connectors with electrical tape to 150 percent of the insulation value of conductor. Tape shall be equal to 3M Super 33+.

F. For terminations #8 AWG and larger, other than lugs supplied with equipment, use copper compression lugs equal to 3M Scotchlok 30,000 Series. Use one hole lugs for conductors up to #1/0 AWG. Use two hole lugs for conductors #1/0 AWG and larger.

G. Thoroughly clean wires before installing lugs and connectors.

H. Splice branch circuits only in junction boxes or outlet boxes. Splices in panelboards shall not be permitted. Feeder conductors shall be continuous from origin to termination. Splices in feeders shall not be permitted unless written approval by the Architect is obtained.

© 2010 Gresham, Smith and Partners. All rights reserved. Use subject to any written agreement with Gresham, Smith and Partners.

I. Terminate spare conductors with insulated spring wire connector and secured with electrical tape.

J. Double lugging of any phase wire, neutral or ground wire in a panelboard or switchboard shall not be allowed.

K. Wiring at Outlets: Install conductor at each outlet, with at least 6 inches(150 mm) of slack.

3.5 SLEEVE INSTALLATION FOR ELECTRICAL PENETRATIONS

A. Coordinate sleeve selection and application with selection and application of firestopping.

B. Fire-Rated Assemblies: Install sleeves for penetrations of fire-rated floor and wall assemblies unless openings compatible with firestop system used are fabricated during construction of floor or wall.

C. Fire-Rated-Assembly Penetrations: Maintain indicated fire rating of walls, partitions, and ceilings, at cable penetrations. Install sleeves and seal with firestop materials.

D. Aboveground Exterior-Wall Penetrations: Seal penetrations using sleeves and mechanical sleeve seals. Size sleeves to allow for 1-inch (25-mm) annular clear space between pipe and sleeve for installing mechanical sleeve seals.

3.6 FIRESTOPPING

A. Apply firestopping to electrical penetrations of fire-rated wall assemblies to restore original fire-resistance rating of assembly according.

3.7 FIELD QUALITY CONTROL

A. Perform tests and inspections and prepare test reports.

B. Tests and Inspections:
1. After installing conductors and cables and before electrical circuitry has been energized, test feeder conductors and conductors feeding the following critical equipment and services for compliance with requirements.

C. Testing: Perform the following field quality-control testing:
1. Torque test conductor connections and terminations to manufacturer's recommended values using a calibrated torque wrench.
2. Perform continuity test at all power and equipment branch circuit conductors. Verify proper phasing connections.
3. Perform an insulation resistance test using a 100 volt "Meggar" on each conductor in all feeder circuits. Test shall be conducted from conductor to ground with the other conductors in that circuit grounded. Voltage shall be applied until Meggar reading is constant, three minutes minimum. Minimum

© 2010 Gresham, Smith and Partners. All rights reserved. Use subject to any written agreement with Gresham, Smith and Partners.

acceptable resistance shall be 50 megaohms, corrected to 60 degrees F for new conductors.

4. Perform insulation resistance tests on all branch circuit conductors that have apparent physical insulation damage and any other branch circuit conductors when requested by Architect. Tests shall be as specified for feeder conductors.
5. Test for compliance with requirements after installing conductors and cables and before electrical circuitry has been energized.
6. Perform each electrical test and visual and mechanical inspection stated in NETA ATS, Section 7.3.1. Certify compliance with test parameters.
7. Replace all failing conductors and retest for compliance with all requirements above.
8. Perform each visual and mechanical inspection and electrical test stated in NETA Acceptance Testing Specification. Certify compliance with test parameters.

D. Test Reports: Prepare a written report to record the following:
1. Test procedures used.
2. Test results that comply with requirements.
3. Test results that do not comply with requirements and corrective action taken to achieve compliance with requirements.

E. Remove and replace malfunctioning units and retest as specified above.

END OF SECTION 26 0519

© 2010 Gresham, Smith and Partners. All rights reserved. Use subject to any written agreement with Gresham, Smith and Partners.

PART 1 - GENERAL

1.1 RELATED DOCUMENTS

A. Drawings and general provisions of the Contract, including General and Supplementary Conditions and Division 01 Specification Sections, apply to this Section.

1.2 SUMMARY

A. This Section includes methods and materials for grounding systems and equipment, plus the following special applications:
   1. Common ground bonding with lightning protection system.

1.3 SUBMITTALS

A. Product Data: For each type of product indicated.

B. Qualification Data: For testing agency and testing agency's field supervisor.

C. Field quality-control test reports.

1.4 QUALITY ASSURANCE

A. Electrical Components, Devices, and Accessories: Listed and labeled as defined in NFPA 70, Article 100, by a testing agency acceptable to authorities having jurisdiction, and marked for intended use.

B. Comply with UL 467 for grounding and bonding materials and equipment.

PART 2 - PRODUCTS

2.1 CONDUCTORS

A. Insulated Conductors: Copper wire or cable insulated for 600 V unless otherwise required by applicable Code or authorities having jurisdiction.

B. Bare Copper Conductors:
   1. Stranded Conductors: ASTM B 8.
   2. Bonding Conductor: No. 4 or No. 6 AWG, stranded conductor.
   3. Bonding Jumper: Copper tape, braided conductors, terminated with copper ferrules; 1-5/8 inches (41 mm) wide and 1/16 inch (1.6 mm) thick.

C. Grounding Bus: Rectangular bars of annealed copper, 1/4 by 2 inches (6 by 50 mm) in cross section, unless otherwise indicated; with insulators.

© 2010 Gresham, Smith and Partners. All rights reserved. Use subject to any written agreement with Gresham, Smith and Partners.

2.2 CONNECTORS

A. Listed and labeled by a nationally recognized testing laboratory acceptable to authorities having jurisdiction for applications in which used, and for specific types, sizes, and combinations of conductors and other items connected.

B. Bolted Connectors for Conductors and Pipes: Copper or copper alloy, bolted pressure-type, with at least two bolts.
   1. Pipe Connectors: Clamp type, sized for pipe.

PART 3 - EXECUTION

3.1 APPLICATIONS

A. Conductors: Install solid conductor for No. 8 AWG and smaller, and stranded conductors for No. 6 AWG and larger, unless otherwise indicated.

3.2 EQUIPMENT GROUNDING

A. Comply with NFPA 70, Article 250, for types, minimum sizes, and quantities of equipment grounding conductors, unless specific types, larger sizes, or more conductors than required by NFPA 70 are indicated.

B. Install equipment grounding conductors in all feeders and branch circuits. Provide a grounding conductor in all switch legs. Provide a grounding conductor in all control wiring circuits 120 volts and above. Refer to panelboard schedules and one line diagram for grounding conductor size other than #12 AWG. The minimum size grounding conductor shall be #12 AWG. Terminate each end on a grounding, lug, bus or bushing as appropriate.

C. Grounding conductors shall not be double lugged in panelboard ground bars.

D. Provide bonding bushings on all feeder conduit terminations in all panelboards, switchboards, and motor control centers. Terminate grounding conductor to panelboard ground bar. Provide a jumper of equal size between the ground bar and the bonding bushing. Size grounding jumper per "Grounding Electrode Conductor for Alternating Current Systems" of NFPA 70.

E. Provide green tape on all grounding conductors larger than #10 AWG.

F. Metallic Sleeves: Where sleeving is required to be metallic, bond both ends of sleeve as required by NEC Article 250.

© 2010 Gresham, Smith and Partners. All rights reserved. Use subject to any written agreement with Gresham, Smith and Partners.

3.3 INSTALLATION

A. Grounding Conductors: Route along shortest and straightest paths possible, unless otherwise indicated or required by Code. Avoid obstructing access or placing conductors where they may be subjected to strain, impact, or damage.

B. Bonding Straps and Jumpers: Install in locations accessible for inspection and maintenance, except where routed through short lengths of conduit.
   1. Bonding to Structure: Bond straps directly to basic structure, taking care not to penetrate any adjacent parts.
   2. Bonding to Equipment Mounted on Vibration Isolation Hangers and Supports: Install so vibration is not transmitted to rigidly mounted equipment.

C. Bonding Interior Metal Ducts: Bond metal air ducts to equipment grounding conductors of associated fans, blowers, electric heaters, and air cleaners. Install bonding jumper to bond across flexible duct connections to achieve continuity.

3.4 CONNECTIONS

A. General: Make connections so galvanic action or electrolysis possibility is minimized. Select connectors, connection hardware, conductors, and connection methods so metals in direct contact will be galvanically compatible.
   1. Use electroplated or hot-tin-coated materials to ensure high conductivity and to make contact points closer to order of galvanic series.
   2. Make connections with clean, bare metal at points of contact.

B. Equipment Grounding Conductor Terminations: For #8 AWG and larger, use pressure-type grounding lugs. #10 AWG and smaller grounding conductors may be terminated with winged pressure-type connectors.

C. Tighten screws and bolts for grounding and bonding connectors and terminals according to manufacturer's published torque-tightening values. If manufacturer's torque values are not indicated, use those specified in UL 486A.

D. Moisture Protection: If insulated grounding conductors are connected to ground rods or grounding buses, insulate entire area of connection and seal against moisture penetration of insulation and cable.

END OF SECTION 26 0526

© 2010 Gresham, Smith and Partners. All rights reserved. Use subject to any written agreement with Gresham, Smith and Partners.

PART 1 - GENERAL

1.1 RELATED DOCUMENTS

A. Drawings and general provisions of the Contract, including General and Supplementary Conditions and Division 01 Specification Sections, apply to this Section.

1.2 SUMMARY

A. This Section includes raceways, fittings, boxes, enclosures, and cabinets for electrical wiring.

1.3 DEFINITIONS

A. EMT: Electrical metallic tubing.

B. EPDM: Ethylene-propylene-diene terpolymer rubber.

C. IMC: Intermediate metal conduit.

D. LFMC: Liquidtight flexible metal conduit.

E. NBR: Acrylonitrile-butadiene rubber.

F. RMC: Rigid metallic conduit.

1.4 SUBMITTALS

A. Product Data: For surface raceways, wireways and fittings, hinged-cover enclosures, and cabinets.

B. Shop Drawings: For the following raceway components. Include plans, elevations, sections, details, and attachments to other work.
1. Custom enclosures and cabinets.

1.5 QUALITY ASSURANCE

A. Electrical Components, Devices, and Accessories: Listed and labeled as defined in NFPA 70, Article 100, by a testing agency acceptable to authorities having jurisdiction, and marked for intended use.

B. Comply with NFPA 70.

© 2010 Gresham, Smith and Partners. All rights reserved. Use subject to any written agreement with Gresham, Smith and Partners.

PART 2 - PRODUCTS

2.1 METAL CONDUIT AND TUBING

A. Available Manufacturers: Subject to compliance with requirements, manufacturers offering products that may be incorporated into the Work include, but are not limited to, the following:
1. Allied Tube & Conduit; a Tyco International Ltd. Co.
2. Anamet Electrical, Inc.; Anaconda Metal Hose.
3. Maverick Tube Corporation.
4. O-Z Gedney; a unit of General Signal.
5. Wheatland Tube Company.
6. Cole-Flex Corp.
7. Flexcon, Inc.; Coleman Cable Systems, Inc.
8. LTV Steel Tubular Products Co.
9. Triangle PWC, Inc.
10. Or approved equal.

B. EMT: ANSI C80.5.

C. Rigid Steel Conduit: ANSI C80.1.

D. IMC: ANSI C80.6.

E. LFMC: Flexible steel conduit with PVC jacket.

F. Fittings for Conduit (Including all Types and Flexible and Liquidtight) and Cable: NEMA FB 1; listed for type and size raceway with which used, and for application and environment in which installed.

G. Joint Compound for Rigid Steel Conduit or IMC: Listed for use in cable connector assemblies, and compounded for use to lubricate and protect threaded raceway joints from corrosion and enhance their conductivity.

H. RNC: NEMA TC 2, Type EPC-40-PVC, unless otherwise indicated.

I. Fittings for RNC: NEMA TC 3; match to conduit or tubing type and material.

2.2 BOXES, ENCLOSURES, AND CABINETS

A. Available Manufacturers: Subject to compliance with requirements, manufacturers offering products that may be incorporated into the Work include, but are not limited to, the following:
1. Cooper Crouse-Hinds; Div. of Cooper Industries, Inc.
2. EGS/Appleton Electric.
3. Erickson Electrical Equipment Company.
4. Hoffman; a Pentair Company.
5. Hubbell Incorporated; Killark Electric Manufacturing Co. Division.

© 2010 Gresham, Smith and Partners. All rights reserved. Use subject to any written agreement with Gresham, Smith and Partners.

6. O-Z/Gedney; a unit of General Signal.
7. RACO; a Hubbell Company.
8. Robroy Industries, Inc.; Enclosure Division.
9. Spring City Electrical Manufacturing Company.
10. Thomas & Betts Corporation.
11. Woodhead, Daniel Company; Woodhead Industries, Inc. Subsidiary.
12. Lamson & Sessions; Carlon Electrical Products.
13. Quazite/Strongwell.
14. Or approved equal.

B. Sheet Metal Outlet and Device Boxes: NEMA 051.

C. Cast-Metal Outlet and Device Boxes: NEMA FB 1, ferrous alloy, Type FD, with gasketed cover, except Type FS conduit body where used for exterior devices.

D. Cast-Metal Access, Pull, and Junction Boxes: NEMA FB 1, galvanized, cast iron with gasketed cover for exterior boxes.

2.3 SLEEVES FOR RACEWAYS

A. Steel Pipe Sleeves Above Grade: ASTM A 53/A 53M, Type E, Grade B, Schedule 40, galvanized steel, plain ends.

B. Coordinate sleeve selection and application with selection and application of firestopping.

PART 3 - UTION

3.1 RACEWAY APPLICATION

A. Refer to National Electrical Code, Article 100, for the definition of Service Entrance, Feeder, and Branch Circuits.

B. Interior Feeders and Branch Circuits: Use EMT.

C. Exterior Feeders and Branch Circuits Exposed Exterior or in Wet Interior Locations: Use RMC or IMC.

D. Use LFMC for final connections to motors, transformers, and all other vibrating equipment.

E. Indoor Boxes in Dry, Unfinished Corrosive Areas: NEMA 12.

F. Outdoor or Areas Subject to Moisture Boxes and Corrosion: Use NEMA 250, Type 4.

G. Minimum Raceway Size: 3/4-inch trade size. Exterior conduits shall be one-inch minimum size, unless otherwise noted.

© 2010 Gresham, Smith and Partners. All rights reserved. Use subject to any written agreement with Gresham, Smith and Partners.

3.2 RACEWAY INSTALLATION

A. Maintain minimum six-inch clearance between raceways and piping. Keep raceways at least 12 inches(300 mm) away from parallel runs and at least 6 inches (153mm) away from perpendicular runs of flues generator exhaust and steam or hot-water pipes. Install horizontal raceway runs above water and steam piping.

B. Cut raceway square using a saw or pipecutter; deburr cut ends.

C. Bring raceway to the shoulder of fittings and couplings and fasten securely.

D. Complete raceway installation before starting conductor installation.

E. Install temporary closures to prevent foreign matter from entering raceways.

F. Protect stub-ups from damage where raceways rise through floor slabs. Arrange so curved portions of bends are not visible above the finished slab.

G. Make bends and offsets so interior diameter is not reduced. Keep legs of bends in the same plane and keep straight legs of offsets parallel, unless otherwise indicated.

H. Install exposed raceways parallel or at right angles to nearby surfaces or structural members and follow surface contours as much as possible.
   1. Run parallel or banked raceways together on common supports.
   2. Make parallel bends in parallel or banked runs. Use factory elbows only where elbows can be installed parallel; otherwise, provide field bends for parallel raceways.

I. Join raceways with fittings designed and approved for that purpose; make joints tight.
   1. Use insulating bushings to protect conductors in all branch circuits.
   2. Use bonding bushings or wedges at connections subject to vibration.

J. Tighten set screws of threadless fittings with suitable tools.

K. Avoid moisture traps where possible; where unavoidable, provide junction box with drain fitting at conduit low point.

L. Install expansion joint fittings where raceway crosses building expansion, seismic or control joints. Provide bonding jumper wire across expansion joint fittings.

M. RMC or IMC installed underground for feeders shall be coated with two coats of asphaltum where not encased in concrete.

N. Raceways crushed or deformed in bending shall be rejected.

O. In general, raceway layout on the drawings is diagrammatic. Follow layout where possible, but where changes are necessary due to structural conditions, other

© 2010 Gresham, Smith and Partners. All rights reserved. Use subject to any written agreement with Gresham, Smith and Partners.

apparatus, or other causes, make them. Offsets in raceways are not indicated; furnish as required.

P. Provide bonding busings on all feeders.

Q. Terminations:
1. Where raceways are terminated with locknuts and bushings, align raceways to enter squarely and install locknuts with dished part against box. Use two locknuts, one inside and one outside box.
2. Where raceways are terminated with threaded hubs, screw raceways or fittings tightly into hub so end bears against wire protection shoulder. Where chase nipples are used, align raceways so coupling is square to box; tighten chase nipple so no threads are exposed.

R. Install pull wires in empty raceways. Use polypropylene or monofilament plastic line with not less than 200-lb(90-kg) tensile strength. Leave at least 12 inches(300 mm) of slack at each end of pull wire.

S. Stub-up Connections: Extend raceways through concrete floor for connection to freestanding equipment. Extend conductors to equipment with LFMC beginning a minimum of 6 inches(150 mm) above the floor.

T. Flexible Connections: Use maximum of 72 inch LFMC for final connection to equipment subject to vibration, noise transmission, or movement; and all motors. Install separate grounding conductor across flexible connections.

U. Use conduit hubs for fastening raceway to cast boxes and for fastening raceway to sheet metal boxes in damp or wet locations.

V. There shall not be more than the equivalent of four 90-degree bends between pull points; e.g., raceway bodies and boxes. Provide pull or junction boxes in raceway runs, spaced a maximum of 200 feet between boxes.

W. Surface Raceways: Install a separate, green, ground conductor in raceways from junction box supplying raceways to receptacle or fixture ground terminals.

3.3 SLEEVE INSTALLATION FOR ELECTRICAL PENETRATIONS

A. Fire-Rated Assemblies: Install sleeves for penetrations of fire-rated floor and wall assemblies unless openings compatible with firestop system used are fabricated during construction of wall.

B. Aboveground, Exterior-Wall Penetrations: Seal penetrations using sleeves and mechanical sleeve seals. Select sleeve size to allow for 1-inch (25-mm) annular clear space between pipe and sleeve for installing mechanical sleeve seals.

© 2010 Gresham, Smith and Partners. All rights reserved. Use subject to any written agreement with Gresham, Smith and Partners.

3.4 FIRESTOPPING

A. Apply firestopping to electrical penetrations of fire-rated floor and wall assemblies to restore original fire-resistance rating of assembly.

3.5 BOX APPLICATIONS

A. Provide electrical boxes as shown on the drawings, and as required for splices, taps, wire pulling, equipment connections, and code compliance.
   1. Electrical box locations shown on Contract Documents are approximate unless dimensioned. Verify exact location of floor boxes and outlets in offices and work areas prior to rough-in.
   2. Locate and install boxes to allow access. Where installation is inaccessible, coordinate locations and sizes of required access doors with applicable Sections of these Specifications.
   3. Locate and install to maintain headroom and to present a neat appearance.

B. Locate boxes in masonry walls to require cutting of masonry unit corner only. Coordinate masonry cutting to achieve neat openings of boxes.

C. Provide knock-out closures for unused box openings.

D. Support boxes independently of raceway except for cast boxes that are connected to two rigid metal raceways, both supported within 12 inches of box. Support ceiling boxes directly from structure per Division 26. Support wall boxes by attaching directly to wall studs.

E. Use multiple-gang boxes where more than one device is mounted together; do not use sectional boxes. Provide permanent barriers to separate wiring of different voltage systems.

F. Install boxes without damaging wall insulation.

G. Position outlets to locate luminaries as shown on reflected ceiling plans.

H. Align heart of wall-mounted outlet boxes for switches, thermostats, and similar devices.

I. Support pull and junction boxes independent of conduit.

J. Install hinged-cover enclosures and cabinets plumb. Support at each corner.

3.6 PROTECTION

A. Provide final protection and maintain conditions that ensure coatings, finishes, and cabinets are without damage or deterioration at time of Substantial Completion.
   1. Repair damage to galvanized finishes with zinc-rich paint recommended by manufacturer.

© 2010 Gresham, Smith and Partners. All rights reserved. Use subject to any written agreement with Gresham, Smith and Partners.

3.7 CLEANING

A. After completing installation of exposed, factory-finished raceways and boxes, inspect exposed finishes and repair damaged finishes.

B. Remove all debris from boxes before installing devices and service fittings.

END OF SECTION 26 0533

© 2010 Gresham, Smith and Partners. All rights reserved. Use subject to any written agreement with Gresham, Smith and Partners.

PART 1 - GENERAL

1.1 RELATED DOCUMENTS

A. Drawings and general provisions of the Contract, including General and Supplementary Conditions and Division 01 Specification Sections, apply to this Section.

1.2 SUMMARY

A. This Section includes the following:
1. Identification for raceway.
2. Warning labels and signs.
3. Instruction signs.
4. Equipment identification labels.
5. Miscellaneous identification products.

1.3 SUBMITTALS

A. Product Data: For each electrical identification product indicated.

B. Identification Schedule: An index of nomenclature of electrical equipment and system components used in identification signs and labels.

C. Samples: For each type of label and sign to illustrate size, colors, lettering style, mounting provisions, and graphic features of identification products.

1.4 QUALITY ASSURANCE

A. Comply with NFPA 70.

B. Comply with 29 CFR 1910.145.

1.5 COORDINATION

A. Coordinate identification names, abbreviations, colors, and other features with requirements in the Contract Documents, Shop Drawings, manufacturer's wiring diagrams, and the Operation and Maintenance Manual, and with those required by codes, standards, and 29 CFR 1910.145. Use consistent designations throughout Project.

B. Coordinate installation of identifying devices with completion of covering and painting of surfaces where devices are to be applied.

C. Coordinate installation of identifying devices with location of access panels and doors.

D. Install identifying devices before installing acoustical ceilings and similar concealment.

© 2009 Gresham, Smith and Partners. All rights reserved. Use subject to any written agreement with Gresham, Smith and Partners.

PART 2 - PRODUCTS

2.1 RACEWAY IDENTIFICATION MATERIALS

A. Self-Adhesive Vinyl Tape: Colored, heavy duty, waterproof, fade resistant; 2 inches (50 mm) wide; compounded for outdoor use.

2.2 CONDUCTOR AND CONTROL-CABLE IDENTIFICATION MATERIALS

A. Color-Coding Conductor Tape: Colored, self-adhesive vinyl tape not less than 3 mils (0.08 mm) thick by 1 to 2 inches (25 to 50 mm) wide.

2.3 WARNING LABELS AND SIGNS

A. Comply with NFPA 70 and 29 CFR 1910.145.

B. Self-Adhesive Warning Labels: Factory printed, multicolor, pressure-sensitive adhesive labels, configured for display on front cover, door, or other access to equipment, unless otherwise indicated.

C. Warning label and sign shall include, but are not limited to, the following legends:
1. Multiple Power Source Warning: "DANGER - ELECTRICAL SHOCK HAZARD - EQUIPMENT HAS MULTIPLE POWER SOURCES."
2. Workspace Clearance Warning: "WARNING - OSHA REGULATION - AREA IN FRONT OF ELECTRICAL EQUIPMENT MUST BE KEPT CLEAR FOR INCHES." Where inches are as defined in NEC working clearances.
3. Emergency Power Sources: "GENERATOR(S) SUPPLY POWER TO THIS FACILITY AND ARE LOCATED _____". Mount at service entrance equipment.

2.4 INSTRUCTION SIGNS

A. Engraved, laminated acrylic or melamine plastic, minimum 1/16 inch (1.6 mm) thick for signs up to 20 sq. in. (129 sq. cm) and 1/8 inch (3.2 mm) thick for larger sizes.
1. Engraved legend with black letters on white face.
2. Punched or drilled for mechanical fasteners.

2.5 EQUIPMENT IDENTIFICATION NAMEPLATES

A. Engraved, Laminated Three (3) Layer Acrylic or Melamine Label: Punched or drilled for screw mounting.
1. Normal Power – White letters on a black background.
2. Generator Power – White letters on a purple background.
3. Blue (UPS) Branch Power – White letter on a blue background.

2.6 MISCELLANEOUS IDENTIFICATION PRODUCTS

A. Cable Ties: Fungus-inert, self-extinguishing, 1-piece, self-locking, Type 6/6 nylon cable ties.

© 2009 Gresham, Smith and Partners. All rights reserved. Use subject to any written agreement with Gresham, Smith and Partners.

1. Minimum Width: 3/16 inch (5 mm).
2. Tensile Strength: 50 lb (22.6 kg), minimum.
3. Temperature Range: Minus 40 to plus 185 deg F (Minus 40 to plus 85 deg C).
4. Color: Black, except where used for color-coding.

B. Paint: Paint materials and application requirements are specified in Division 09 painting Sections.

C. Fasteners for Labels and Signs: Self-tapping, stainless-steel screws or stainless-steel machine screws with nuts and flat and lock washers.

PART 3 - EXECUTION

3.1 APPLICATION

A. Accessible Raceways, 600 V or Less, for Service, Feeder, and Branch Circuits More Than 30 A: Identify with orange self-adhesive vinyl label.
1. Normal Power - White letters on a black background.
2. Generator Power - White letters on a purple background.
3. Blue (UPS) Branch Power - White letters on a blue background.

B. Power-Circuit Conductor Identification: For conductors No. 1/10 AWG and larger in vaults, pull and junction boxes, manholes, and handholes use write-on tags. Identify source and circuit number of each set of conductors. For single conductor cables, identify phase in addition to the above.

C. Branch-Circuit Conductor Identification: Provide wire markers on each conductor in panelboard gutters, pull and junction boxes identifying the branch circuit for all power and lighting circuits.

D. Auxiliary Electrical Systems Conductor Identification: Identify field-installed signal, voice, and data connections.
1. Identify conductors, cables, and terminals in enclosures and at junctions, terminals, and pull points. Identify by system and circuit designation.
2. Use system of marker tape designations that is uniform and consistent with system used by manufacturer for factory-installed connections.
3. Coordinate identification with Project Drawings, manufacturer's wiring diagrams, and Operation and Maintenance Manual.

© 2009 Gresham, Smith and Partners. All rights reserved. Use subject to any written agreement with Gresham, Smith and Partners.

E. Warning Labels for Indoor Cabinets, Boxes, and Enclosures for Power and Lighting: Comply with 29 CFR 1910.145 and apply self-adhesive warning labels. Identify system voltage with black letters on an orange background. Apply to exterior of door, cover, or other access.
   1. Equipment with Multiple Power or Control Sources: Apply to door or cover of equipment including, but not limited to, the following:
      a. Power transfer switches.
      b. Controls with external control power connections.
   2. Equipment Requiring Workspace Clearance According to NFPA 70: Unless otherwise indicated, apply to door or cover of equipment but not on flush panelboards and similar equipment in finished spaces.

F. Instruction Signs:
   1. Operating Instructions: Install instruction signs to facilitate proper operation and maintenance of electrical systems and items to which they connect. Install instruction signs with approved legend where instructions are needed for system or equipment operation.
   2. Emergency Operating Instructions: Install instruction signs with white legend on a red background with minimum 3/8-inch- (10-mm-) high letters for emergency instructions at equipment used for power transfer.

G. Equipment Identification Nameplates: On each unit of equipment, install unique designation nameplate that is consistent with wiring diagrams, schedules, and Operation and Maintenance Manual. Apply nameplates to disconnect switches and protection equipment, central or master units, control panels, and control stations. Systems include power, control, communication, signal, monitoring, and alarm systems unless equipment is provided with its own identification.

H. Provide nameplates of minimum letter height with the required information as indicated below.

I. Panelboards: 1/4 inch; identify equipment designation. 1/8 inch; identify voltage rating and source.

J. Individual Circuit Breakers, Enclosed Fused and Non-Fused Switches (Including Starters Furnished By Others): 1/8 inch; identify circuit and load served.

K. Systems Cabinets: 1/4 inch identifies equipment designation; 1/8 inch identifies circuit supplying the cabinet.

L. Control Devices: 1/8 inch identifies equipment designation; 1/8 inch identify circuit load served.

M. Receptacles: 1/8 inch identifying panelboard name and circuit number to which receptacle is connected. White letters on black background for normal power and white letters on red background for emergency power circuits.

© 2009 Gresham, Smith and Partners. All rights reserved. Use subject to any written agreement with Gresham, Smith and Partners.

N. Miscellaneous Signage: 1/4 inch, wording as specified on drawings. White letters on black background unless noted otherwise on the drawings.

O. Degrease and clean surfaces to receive nameplates.

P. Install nameplates parallel, plumb and level to equipment lines.

Q. Secure pre-drilled nameplates to equipment fronts using screws or rivets. Adhesive backed labels shall not be acceptable. Secure nameplate to outside face of recessed panelboard doors in finished locations.

3.2 INSTALLATION

A. Verify identity of each item before installing identification products.

B. Location: Install identification materials and devices at locations for most convenient viewing without interference with operation and maintenance of equipment.

C. Attach nonadhesive signs and plastic labels with screws or rivets and auxiliary hardware appropriate to the location and substrate.

3.3 EMERGENCY POWER SYSTEM COLOR CODING

A. Color-coding shall be in accordance with NEC Article 700-9(a).

B. Color code all junctions and pull boxes and enclosures for normal power and emergency power so that they can be readily identified as components of those systems. Paint the entire box and cover. Painting only the cover of the box shall not be acceptable.

C. Color code conduits for normal power and emergency power with a four-inch band of paint or plastic tape every ten feet minimum and within one foot of any box.

D. Color coding shall be as follows:

Normal Power System	Brown
Emergency Power System:	Yellow

E. Color-Coding for Phase and Voltage Level Identification, 600 V and Less: Use the colors listed below for ungrounded service, feeder, and branch-circuit conductors.
1. Color shall be factory applied or, for sizes larger than No. 8 AWG field applied.
2. Colors for 208/120-V Circuits:
   a. Phase A: Black.
   b. Phase B: Red.
   c. Phase C: Blue.
3. Field-Applied, Color-Coding Conductor Tape: Apply in half-lapped turns for a minimum distance of 6 inches (150 mm) from terminal points and in boxes where splices or taps are made. Apply last two turns of tape with no tension to

© 2009 Gresham, Smith and Partners. All rights reserved. Use subject to any written agreement with Gresham, Smith and Partners.

prevent possible unwinding. Locate bands to avoid obscuring factory cable markings.

3.4 PULL AND JUNCTION BOX LABELING

A. Indicate in legible, permanent black marker the panel and circuit number of all power-wiring conductors contained in the box on the exterior of the box cover. Label cover at floor level. Do not label standing on a ladder with box cover above.

END OF SECTION 26 0553

© 2009 Gresham, Smith and Partners. All rights reserved. Use subject to any written agreement with Gresham, Smith and Partners.

PART 1 - GENERAL

1.1 RELATED DOCUMENTS

A. Drawings and general provisions of the Contract, including General and Supplementary Conditions and Division 01 Specification Sections, apply to this Section.

1.2 SUMMARY

A. Section includes the following equipment rated 600V or less.
1. Lighting and appliance branch-circuit panelboards.

1.3 DEFINITIONS

A. SVR: Suppressed voltage rating.

B. TVSS: Transient voltage surge suppressor.

1.4 SUBMITTALS

A. Product Data: For each type of panelboard, switching and overcurrent protective device, transient voltage suppression device, accessory, and component indicated. Include dimensions and manufacturers' technical data on features, performance, electrical characteristics, ratings, and finishes.

B. Shop Drawings: For each panelboard and related equipment.
1. Include dimensioned plans, elevations, sections, and details. Show tabulations of installed devices, equipment features, and ratings.
2. Detail enclosure types and details for types other than NEMA 250, Type 1.
3. Detail bus configuration, current, and voltage ratings.
4. Short-circuit current rating of panelboards and overcurrent protective devices.
5. Detail features, characteristics, ratings, and factory settings of individual overcurrent protective devices and auxiliary components.
6. Include wiring diagrams for power, signal, and control wiring.

C. Field Quality-Control Reports:
1. Test procedures used.
2. Test results that comply with requirements.
3. Results of failed tests and corrective action taken to achieve test results that comply with requirements.

D. Panelboard Schedules: For installation in panelboards. Submit final versions after load balancing.

E. Operation and Maintenance Data: For panelboards and components to include in emergency, operation, and maintenance manuals. In addition to items specified in Division 01 Section "Operation and Maintenance Data," include the following:

© 2010 Gresham, Smith and Partners. All rights reserved. Use subject to any written agreement with Gresham, Smith and Partners.

1. Manufacturer's written instructions for testing and adjusting overcurrent protective devices.
2. Time-current curves, including selectable ranges for each type of overcurrent protective device that allows adjustments.

1.5 QUALITY ASSURANCE

A. Source Limitations: Obtain panelboards, overcurrent protective devices, components, and accessories from single source from single manufacturer.

B. Electrical Components, Devices, and Accessories: Listed and labeled as defined in NFPA 70, by a qualified testing agency, and marked for intended location and application.

C. Comply with NEMA PB 1.

D. Comply with NFPA 70.

1.6 DELIVERY, STORAGE, AND HANDLING

A. Remove loose packing and flammable materials from inside panelboards; install temporary electric heating (250 W per panelboard) to prevent condensation.

B. Handle and prepare panelboards for installation according to NEMA PB 1.

1.7 PROJECT CONDITIONS

A. Environmental Limitations:
1. Do not deliver or install panelboards until spaces are enclosed and weathertight, wet work in spaces is complete and dry, work above panelboards is complete, and temporary HVAC system is operating and maintaining ambient temperature and humidity conditions at occupancy levels during the remainder of the construction period.

B. Service Conditions: NEMA PB 1, usual service conditions, as follows:
1. Ambient temperatures within limits specified.
2. Altitude not exceeding 6600 feet (2000 m).

C. Interruption of Existing Electric Service: Do not interrupt electric service to facilities occupied by Owner or others unless permitted under the following conditions and then only after arranging to provide temporary electric service according to requirements indicated:
1. Notify Owner no fewer than 14 days in advance of proposed interruption of electric service.
2. Do not proceed with interruption of electric service without Owner's written permission.
3. Comply with NFPA 70E.

© 2010 Gresham, Smith and Partners. All rights reserved. Use subject to any written agreement with Gresham, Smith and Partners.

1.8 COORDINATION

A. Coordinate layout and installation of panelboards and components with other construction that penetrates walls or is supported by them, including electrical and other types of equipment, raceways, piping, encumbrances to workspace clearance requirements, and adjacent surfaces. Maintain required workspace clearances and required clearances for equipment access doors and panels.

1.9 WARRANTY

A. Special Warranty: Manufacturer's standard form in which manufacturer agrees to repair or replace transient voltage suppression devices that fail in materials or workmanship within specified warranty period.
   1. Warranty Period: Five years from date of Substantial Completion.

PART 2 - PRODUCTS

2.1 GENERAL REQUIREMENTS FOR PANELBOARDS

A. Fabricate and test panelboards according to IEEE 344 to withstand seismic forces defined in Division 26.

B. Enclosures: Surface-mounted cabinets.
   1. Rated for environmental conditions at installed location.
      a. Indoor Dry and Clean Locations: NEMA 250, Type 1.
   2. Front: Secured to box with concealed trim clamps. For surface-mounted fronts, match box dimensions; for flush-mounted fronts, overlap box.
   3. Hinged Front Cover: Entire front trim hinged to box and with standard door within hinged trim cover.
   4. Skirt for Surface-Mounted Panelboards: Same gage and finish as panelboard front with flanges for attachment to panelboard, wall, and ceiling or floor.
   5. Gutter Extension and Barrier: Same gage and finish as panelboard enclosure; integral with enclosure body. Arrange to isolate individual panel sections.
   6. Finishes:
      a. Panels and Trim: Steel, factory finished immediately after cleaning and pretreating with manufacturer's standard two-coat, baked-on finish consisting of prime coat and thermosetting topcoat.
      b. Back Boxes: Same finish as panels and trim.
   7. Directory Card: Inside panelboard door, mounted in metal frame with transparent protective cover.

C. Incoming Mains Location: Top and bottom.

D. Phase, Neutral, and Ground Buses:
   1. Material: Hard-drawn copper, 98 percent conductivity.
   2. Equipment Ground Bus: Adequate for feeder and branch-circuit equipment grounding conductors; bonded to box.

© 2010 Gresham, Smith and Partners. All rights reserved. Use subject to any written agreement with Gresham, Smith and Partners.

3. Isolated Ground Bus: Adequate for branch-circuit isolated ground conductors; insulated from box.
4. Extra-Capacity Neutral Bus: Neutral bus rated 200 percent of phase bus and UL listed as suitable for nonlinear loads.

E. Conductor Connectors: Suitable for use with conductor material and sizes.
1. Material: Tin-plated aluminum.
2. Main and Neutral Lugs: Mechanical type.
3. Ground Lugs and Bus-Configured Terminators: Mechanical type.
4. Feed-Through Lugs: Mechanical type, suitable for use with conductor material. Locate at opposite end of bus from incoming lugs or main device.
5. Subfeed (Double) Lugs: Mechanical type suitable for use with conductor material. Locate at same end of bus as incoming lugs or main device.
6. Extra-Capacity Neutral Lugs: Rated 200 percent of phase lugs mounted on extra-capacity neutral bus.

F. Future Devices: Mounting brackets, bus connections, filler plates, and necessary appurtenances required for future installation of devices.

G. Panelboard Short-Circuit Current Rating: Fully rated to interrupt symmetrical short-circuit current available at terminals.

2.2 LIGHTING AND APPLIANCE BRANCH-CIRCUIT PANELBOARDS

A. Manufacturers: Subject to compliance with requirements, provide products by one of the following:
1. Eaton Electrical Inc.; Cutler-Hammer Business Unit.
2. General Electric Company; GE Consumer & Industrial - Electrical Distribution.
3. Siemens Energy & Automation, Inc.
4. Square D; a brand of Schneider Electric.
5. Or approved equal.

B. Panelboards: NEMA PB 1, lighting and appliance branch-circuit type.

C. Mains: As indicated on drawings.

D. Branch Overcurrent Protective Devices: Bolt-on circuit breakers, replaceable without disturbing adjacent units.

E. Doors: Concealed hinges; secured with flush latch with tumbler lock; keyed alike.

2.3 DISCONNECTING AND OVERCURRENT PROTECTIVE DEVICES

A. Manufacturers: Subject to compliance with requirements, provide products by one of the following:
1. Eaton Electrical Inc.; Cutler-Hammer Business Unit.
2. General Electric Company; GE Consumer & Industrial - Electrical Distribution.
3. Square D; a brand of Schneider Electric.
4. Or approved equal.

© 2010 Gresham, Smith and Partners. All rights reserved. Use subject to any written agreement with Gresham, Smith and Partners.

B. Molded-Case Circuit Breaker (MCCB): Comply with UL 489, with interrupting capacity to meet available fault currents.
   1. Thermal-Magnetic Circuit Breakers: Inverse time-current element for low-level overloads, and instantaneous magnetic trip element for short circuits. Adjustable magnetic trip setting for circuit-breaker frame sizes 100 A and larger.
   2. GFCI Circuit Breakers: Single- and two-pole configurations with Class A ground-fault protection (6-mA trip).

C. Twin breakers in one pole space (tandem breakers) are not acceptable.

PART 3 - EXECUTION

3.1 EXAMINATION

A. Receive, inspect, handle, and store panelboards according to NEMA PB 1.1.

B. Examine panelboards before installation. Reject panelboards that are damaged or rusted or have been subjected to water saturation.

C. Examine elements and surfaces to receive panelboards for compliance with installation tolerances and other conditions affecting performance of the Work.

D. Proceed with installation only after unsatisfactory conditions have been corrected.

3.2 INSTALLATION

A. Install panelboards and accessories according to NEMA PB 1.1.

B. Mount top of trim 78 inches (1950 mm) above finished floor unless otherwise indicated.

C. Mount panelboard cabinet plumb and rigid without distortion of box. Mount recessed panelboards with fronts uniformly flush with wall finish and mating with back box.

D. Panelboards installed on exterior walls shall be mounted in Unistrut, or approved equal, to provide a minimum of one inch air space between panel and wall.

E. Install filler plates in unused spaces.

F. Arrange conductors in gutters into groups and bundle and wrap with wire ties after completing load balancing.

G. Comply with NECA 1.

© 2010 Gresham, Smith and Partners. All rights reserved. Use subject to any written agreement with Gresham, Smith and Partners.

3.3 IDENTIFICATION

A. Identify field-installed conductors, interconnecting wiring, and components; provide warning signs complying with Division 26 Section "Identification for Electrical Systems."

B. Create a directory to indicate installed circuit loads after balancing panelboard loads; incorporate Owner's final room designations. Obtain approval before installing. Use a computer or typewriter to create directory; handwritten directories are not acceptable.

C. Panelboard Nameplates: Label each panelboard with a nameplate complying with requirements for identification specified in Division 26 Section "Identification for Electrical Systems."

D. Device Nameplates: Label each branch circuit device in distribution panelboards with a nameplate complying with requirements for identification specified in Division 26 Section "Identification for Electrical Systems."

3.4 FIELD QUALITY CONTROL

A. Acceptance Testing Preparation:
1. Test insulation resistance for each panelboard bus, component, connecting supply, feeder, and control circuit.
2. Measure resistance of each bus phase to phase and phase to ground for one minute each. Test voltage shall be 1000 volts. Minimum acceptance insulation resistance shall be 2 mega ohms.
3. Measure resistance between ground bus and panelboard enclosure. Maximum resistance shall be 001 ohms.
4. Test continuity of each circuit.

B. Tests and Inspections:
1. Perform each visual and mechanical inspection and electrical test stated in NETA Acceptance Testing Specification. Certify compliance with test parameters.
2. Correct malfunctioning units on-site, where possible, and retest to demonstrate compliance; otherwise, replace with new units and retest.

C. Panelboards will be considered defective if they do not pass tests and inspections.

D. Prepare test and inspection reports, including a certified report that identifies panelboards included and that describes scanning results. Include notation of deficiencies detected, remedial action taken, and observations after remedial action.

3.5 ADJUSTING

A. Adjust moving parts and operable component to function smoothly, and lubricate as recommended by manufacturer.

© 2010 Gresham, Smith and Partners. All rights reserved. Use subject to any written agreement with Gresham, Smith and Partners.

B. Set field-adjustable circuit-breaker trip ranges as indicated.

C. Load Balancing: After Substantial Completion, but not more than 60 days after Final Acceptance, measure load balancing and make circuit changes.
   1. Measure as directed during period of normal system loading.
   2. Perform load-balancing circuit changes outside normal occupancy/working schedule of the facility and at time directed.
   3. After circuit changes, recheck loads during normal load period. Record all load readings before and after changes and submit test records.
   4. Tolerance: Difference exceeding 20 percent between phase loads, within a panelboard, is not acceptable. Rebalance and recheck as necessary to meet this minimum requirement.

3.6 PROTECTION

A. Temporary Heating: Apply temporary heat to maintain temperature according to manufacturer's written instructions.

END OF SECTION 26 2416

© 2010 Gresham, Smith and Partners. All rights reserved. Use subject to any written agreement with Gresham, Smith and Partners.

PART 1 - GENERAL

1.1 RELATED DOCUMENTS

A. Drawings and general provisions of the Contract, including General and Supplementary Conditions and Division 01 Specification Sections, apply to this Section.

1.2 SUMMARY

A. This Section includes the following:
1. Receptacles, receptacles with integral GFCI, and associated device plates.
2. Specification-grade receptacles.
3. Snap switches and wall-box dimmers.
4. Communications outlets.

1.3 DEFINITIONS

A. EMI: Electromagnetic interference.

B. GFCI: Ground-fault circuit interrupter.

C. UTP: Unshielded twisted pair.

1.4 SUBMITTALS

A. Product Data: For each type of product indicated.

B. Shop Drawings: List of legends and description of materials and process used for premarking wall plates.

C. Samples: One for each type of device and wall plate specified, in each color specified.

D. Field quality-control test reports.

1.5 QUALITY ASSURANCE

A. Source Limitations: Obtain each type of wiring device and associated wall plate through one source from a single manufacturer. Insofar as they are available, obtain all wiring devices and associated wall plates from a single manufacturer and one source.

B. Electrical Components, Devices, and Accessories: Listed and labeled as defined in NFPA 70, Article 100, by a testing agency acceptable to authorities having jurisdiction, and marked for intended use.

C. Comply with NFPA 70.

© 2010 Gresham, Smith and Partners. All rights reserved. Use subject to any written agreement with Gresham, Smith and Partners.

1.6 COORDINATION

A. Receptacles for Owner-Furnished Equipment: Match plug configurations.
   1. Cord and Plug Sets: Match equipment requirements.

1.7 EXTRA MATERIALS

A. Furnish extra materials described in subparagraphs below that match products installed and that are packaged with protective covering for storage and identified with labels describing contents.
   1. Receptacles and receptacle wall plates , two (2) of each type.

PART 2 - PRODUCTS

2.1 MANUFACTURERS

A. Manufacturers' Names: Shortened versions (shown in parentheses) of the following manufacturers' names are used in other Part 2 articles:
   1. Cooper Wiring Devices; a division of Cooper Industries, Inc. (Cooper).
   2. Hubbell Incorporated; Wiring Device-Kellems (Hubbell).
   3. Leviton Mfg. Company Inc. (Leviton).
   4. Pass & Seymour/Legrand; Wiring Devices & Accessories (Pass & Seymour).
   5. Lutron Electronics Company, Inc.

2.2 STRAIGHT BLADE RECEPTACLES

A. Convenience Receptacles, 125 V, NEMA 5-20R, 20 A: Specification grade. Comply with NEMA WD 1, NEMA WD 6 configuration 5-20R, and UL 498.
   1. Terminals: Screw terminals. Devices shall not have clamping terminals.
   2. Line Contacts: Triple-wipe nickel-plated brass "T" contacts.
   3. Ground Contacts: Double-wipe contacts.
   4. Mounting Strap: One-piece, non-riveted, nickel-plated brass grounding system and mounting strap. Riveted brass grounding system on steel mounting strap.

2.3 GFCI RECEPTACLES

A. General Description: Straight blade, non-feed-through type. Specification grade, NEMA 5-20R duplex receptacle. Comply with NEMA WD 1, NEMA WD 6, UL 498, and UL 943, Class A, and include indicator light that is lighted when device is tripped. Design units for installation in a 2-3/4 inch(70mm) deep outlet box without an adapter.

B. GFCI receptacles to provide end of life provision. When a GFCI receptacle is incapable of passing its internal test function it will comply with either 1 or 2 below:
   1. Render itself incapable of delivering power.
   2. Indicate by visual and/or audible means that the device must be replaced.

C. Reverse Line-Load Miswire: A GFCI receptacle will deny power to the receptacle face if it is miswired.

© 2010 Gresham, Smith and Partners. All rights reserved. Use subject to any written agreement with Gresham, Smith and Partners.

2.4 SNAP SWITCHES

A. Comply with NEMA WD 1 and UL 20.

B. Switches, 120/277 V, 20 A: Single, three-way, four-way; comply with DSCC W-C-896F and UL 20 amp.
   1. Toggle Construction: Thermoplastic.
   2. Mounting Strap: Zinc-plated steel mounting strap.
   3. Single-Pole Switch: Single pole, single-throw for one conductor.
   4. Two-Pole Switch: Double-pole, single-throw for two conductors.
   5. Three-Way Switch: Single-pole, double-throw for three conductors.
   6. Four-Way Switch: Double pole, double-throw for four conductors.

C. Toggle Switches: Specification grade, quiet type.

2.5 WALL-BOX DIMMERS

A. Dimmer Switches: Modular, full-wave, solid-state units with integral, quiet on-off switches, with audible frequency and EMI/RFI suppression filters.

B. Control: Continuously adjustable slider; with single-pole or three-way switching. Comply with UL 1472.

C. Incandescent Lamp Dimmers: 120 V; control shall follow square-law dimming curve. On-off switch positions shall bypass dimmer module.
   1. 1200 W minimum; dimmers shall require no derating when ganged with other devices. Illuminated when "OFF."

2.6 WALL PLATES

A. Single and combination types to match corresponding wiring devices.
   1. Plate-Securing Screws: Metal with head color to match plate finish.
   2. Material for Finished Spaces: Smooth, high-impact thermoplastic.
   3. Material for Damp Locations: Cast aluminum with spring-loaded lift cover, and listed and labeled for use in "wet locations."

B. Wet-Location, Weatherproof Cover Plates: NEMA 250, complying with type 3R weather-resistant, cast aluminum with lockable cover. UV stabilized with gasket and hinged device covers listed and labeled "wet location while in use". Hubbell WP826 series or Taymac MM400 or approved equal.

C. Provide thermoplastic wall plates in color to match device.

D. Provide a blank cover plate in finished areas for all blank telephone and/or data outlet boxes.

2.7 FINISHES

A. Color: Wiring device catalog numbers in Section Text do not designate device color.

© 2010 Gresham, Smith and Partners. All rights reserved. Use subject to any written agreement with Gresham, Smith and Partners.

1. Wiring Devices Connected to Normal Power System: Ivory, unless otherwise indicated or required by NFPA 70 or device listing.
2. Wiring Devices Connected to Generator Power System: Red.
3. Wiring Devices Served from UPS Power: Blue.

PART 3 - EXECUTION

3.1 INSTALLATION

A. Comply with NECA 1, including the mounting heights listed in that standard, unless otherwise noted.

B. Install wall switches with centerline 46 inches above floor, OFF position down.

C. Install convenience receptacles vertical, centerline 18 inches above floor.

D. Install specific-use receptacles as required by the equipment manufacturer.

E. Install devices and assemblies level, plumb, and square with building lines.

F. Install wall dimmers to achieve indicated rating after derating for ganging according to manufacturer's written instructions.

G. Install unshared neutral conductors on line and load side of dimmers according to manufacturers' written instructions.

H. Where two or more receptacles or switches are shown immediately adjacent, install in multi-gang outlet boxes under a single cover plate. Where voltage between adjacent switches in a common outlet box exceeds 300 volts (277 volt lighting circuits on different phases) provide a permanent barrier between switches in accordance with NEC 2002 Article 380.

I. Install GFI type receptacles for all receptacles indicated as weatherproof. Install receptacle vertical with centerline 24 inches above floor or finished grade, with weatherproof cover hinge up.

J. Remove wall plates and protect devices and assemblies during painting.

© 2010 Gresham, Smith and Partners. All rights reserved. Use subject to any written agreement with Gresham, Smith and Partners.

K. Coordination with Other Trades:
   1. Take steps to insure that devices and their boxes are protected. Do not place wall finish materials over device boxes and do not cut holes for boxes with routers that are guided by riding against outside of the boxes.
   2. Keep outlet boxes free of plaster, drywall joint compound, mortar, cement, concrete, dust, paint, and other material that may contaminate the raceway system, conductors, and cables.
   3. Install wiring devices after all wall preparation, including painting, is complete.

L. Conductors:
   1. Do not strip insulation from conductors until just before they are spliced or terminated on devices.
   2. Strip insulation evenly around the conductor using tools designed for the purpose. Avoid scoring or nicking of solid wire or cutting strands from stranded wire.
   3. The length of free conductors at outlets for devices shall meet provisions of NFPA 70, Article 300, without pigtails.
   4. Existing Conductors:
      a. Cut back and pigtail, or replace all damaged conductors.
      b. Straighten conductors that remain and remove corrosion and foreign matter.
      c. Pigtailing existing conductors is permitted provided the outlet box is large enough.

M. Device Installation:
   1. Replace all devices that have been in temporary use during construction or that show signs that they were installed before building finishing operations were complete.
   2. Keep each wiring device in its package or otherwise protected until it is time to connect conductors.
   3. Do not remove surface protection, such as plastic film and smudge covers, until the last possible moment.
   4. Connect devices to branch circuits using pigtails that are not less than 6 inches (152 mm) in length.
   5. When there is a choice, use side wiring with binding-head screw terminals. Wrap solid conductor tightly clockwise, 2/3 to 3/4 of the way around terminal screw.
   6. Use a torque screwdriver when a torque is recommended or required by the manufacturer.
   7. When conductors larger than No. 12 AWG are installed on 15- or 20-A circuits, splice No. 12 AWG pigtails for device connections.
   8. Tighten unused terminal screws on the device.
   9. When mounting into metal boxes, remove the fiber or plastic washers used to hold device mounting screws in yokes, allowing metal-to-metal contact.

© 2010 Gresham, Smith and Partners. All rights reserved. Use subject to any written agreement with Gresham, Smith and Partners.

N. Receptacle Orientation:
   1. Install ground pin of vertically mounted receptacles.

O. Device Plates: Do not use oversized or extra-deep plates. Repair wall finishes and remount outlet boxes when standard device plates do not fit flush or do not cover rough wall opening.

P. Dimmers:
   1. Install dimmers within terms of their listing.
   2. Install unshared neutral conductors on line and load side of dimmers according to manufacturers' device listing conditions in the written instructions.

Q. Arrangement of Devices: Unless otherwise indicated, mount flush, with long dimension vertical and with grounding terminal of receptacles on top. Group adjacent switches under single, multigang wall plates.

3.2 IDENTIFICATION

A. Comply with Division 26 Section "Identification for Electrical Systems."
   1. Receptacles: Identify panelboard and circuit number from which served. Use hot, stamped or engraved machine printing with black-filled lettering on face of plate, and durable wire markers or tags inside outlet boxes.

3.3 FIELD QUALITY CONTROL

A. Perform tests and inspections and prepare test reports.
   1. Test Instruments: Use instruments that comply with UL 1436.
   2. Test Instrument for Convenience Receptacles: Digital wiring analyzer with digital readout or illuminated LED indicators of measurement.

B. Tests for Convenience Receptacles:
   1. Line Voltage: Acceptable range is 105 to 132 V.
   2. Ground Impedance: Values of up to 2 ohms are acceptable.
   3. GFCI Trip: Test for tripping values specified in UL 1436 and UL 943.
   4. Using the test plug, verify that the device and its outlet box are securely mounted.
   5. The tests shall be diagnostic, indicating damaged conductors, high resistance at the circuit breaker, poor connections, inadequate fault current path, defective devices, or similar problems. Correct circuit conditions, remove malfunctioning units and replace with new ones, and retest as specified above.

C. Remove malfunctioning units, replace with new units, and retest as specified above.

END OF SECTION 26 2726

© 2010 Gresham, Smith and Partners. All rights reserved. Use subject to any written agreement with Gresham, Smith and Partners.

PART 1 - GENERAL

1.1 SUMMARY

A. This Section includes a packaged engine-generator set for standby power supply as indicated on the Drawings, with the following features:
1. Battery charger.
2. Engine generator set.
3. Critical silencer.
4. Outdoor enclosure.
5. Remote annunciator.
6. Remote stop switch.
7. Starting battery.
8. Unit heaters.
9. Battery tray heaters.
10. Main circuit breaker.
11. Water jacket heater.
12. Fuel cooler.
13. Unit MT'D load center.

B. Generator shall be suitable for use on double conversion UPS Systems.

C. Delivery: Installing contractor shall offload and install generator set. Coordinate delivery with Owner.

D. Provide the following with Bid:
1. Fabrication and delivery schedule.
2. Dimensioned plan view showing anchor bolt locations, utility connection locations, i.e., main circuit breaker, load center, control panel, etc.
3. Dry and wet weights.
4. Additional information needed to prepare for generator installation.

1.2 DEFINITIONS

A. Operational Bandwidth: The total variation from the lowest to highest value of a parameter over the range of conditions indicated, expressed as a percentage of the nominal value of the parameter.

1.3 SUBMITTALS

A. Product Data: For each type of packaged engine generator indicated. Include rated capacities, operating characteristics, and furnished specialties and accessories. In addition, include the following:
1. Dimensioned outline plan and elevation drawings of engine generator set and all other components specified.
2. Thermal damage curve for generator.
3. Generator decrement curve.
4. Time-current characteristic curves for generator overcurrent device.

© 2010 Gresham, Smith and Partners. All rights reserved. Use subject to any written agreement with Gresham, Smith and Partners.

5. Fuel consumption rate curves at various loads from 0 percent to 100 percent in 25 percent increments.
6. Ventilation and combustion air requirements.

B. Shop Drawings: Detail equipment assemblies and indicate dimensions, weights, loads, required clearances, method of field assembly, components, and location and size of each field connection.
1. Dimensioned outline plan and elevation drawings of engine-generator set and other components specified.
2. Design Calculations: Signed and sealed by a qualified professional engineer. Calculate requirements for selecting vibration isolators and seismic restraints and for designing vibration isolation bases.
3. Vibration Isolation Base Details: Signed and sealed by a qualified professional engineer. Detail fabrication, including anchorages and attachments to structure and to supported equipment. Include base weights.
4. Wiring Diagrams: Power, signal, and control wiring.
5. Provide letter from the manufacturer indicating that this type and model unit has successfully passed a factory test for rated KVA and power factor. Test for this type and model of unit shall be a minimum of six hours with a combination resistive and reactive load bank to achieve the rated power factor.

C. Manufacturer Seismic Qualification Certification: Submit certification that engine-generator set, batteries, battery racks, accessories, and components will withstand seismic forces.

D. Qualification Data: For manufacturer.

E. Source quality-control test reports.
1. Certified Summary of Performance Tests: Certify compliance with specified requirement to meet performance criteria for sensitive loads.
2. Report of factory test on units to be shipped for this Project, showing evidence of compliance with specified requirements.
3. Report of sound generation.
4. Report of exhaust emissions showing compliance with applicable regulations.
5. Certified Torsional Vibration Compatibility: Comply with NFPA 110.

F. Field quality-control test reports.

G. Operation and Maintenance Data: For packaged engine generators to include in emergency, operation, and maintenance manuals. Include the following:
1. List of tools and replacement items recommended to be stored at Project for ready access. Include part and drawing numbers, current unit prices, and source of supply.

H. Warranty: Special warranty specified in this Section.

© 2010 Gresham, Smith and Partners. All rights reserved. Use subject to any written agreement with Gresham, Smith and Partners.

1.4 QUALITY ASSURANCE

A. Installer Qualifications: Manufacturer's authorized representative who is trained and approved for installation of units required for this Project.
   1. Maintenance Proximity: Not more than one hours' normal travel time from Installer's place of business to Project site.

B. Manufacturer Qualifications: A qualified manufacturer. Maintain, within 75 miles of Project site, a service center capable of providing training, parts, and emergency maintenance repairs, including the engine, generator, control panel, and load management switchgear.

C. Source Limitations: Obtain packaged generator sets and auxiliary components through one source from a single manufacturer, the single manufacturer.

D. Electrical Components, Devices, and Accessories: Listed and labeled as defined in NFPA 70, Article 100, by a testing agency acceptable to authorities having jurisdiction, and marked for intended use.

E. Comply with ASME B15.1.

F. Comply with NFPA 37.

G. Comply with NFPA 70.

H. Comply with NFPA 110 requirements for Level 1 emergency power supply system.

I. Comply with UL 2200.

J. Engine Exhaust Emissions: Comply with EPT Tier 2 certified requirements.

K. Noise Emission: Comply with 75 dba for maximum noise level at 7 meters in all directions, due to sound emitted by generator set including engine, engine exhaust, engine cooling-air intake and discharge, and other components of installation.

1.5 PROJECT CONDITIONS

A. Environmental Conditions: Engine-generator system shall withstand the following environmental conditions without mechanical or electrical damage or degradation of performance capability. Provide KW/KVA rating as indicated on the drawings at the elevation above sea level and ambient temperature ranges at the installation site, using an engine mounted radiator.
   1. Ambient Temperature: Minus 15 to plus 40 deg C.
   2. Relative Humidity: 0 to 95 percent.
   3. Altitude: Sea level to 1000 feet (300 m).

© 2010 Gresham, Smith and Partners. All rights reserved. Use subject to any written agreement with Gresham, Smith and Partners.

1.6 WARRANTY

A. Special Warranty: Manufacturer's standard form in which manufacturer agrees to repair or replace components of packaged engine generators and associated auxiliary components that fail in materials or workmanship within specified warranty period.
   1. Warranty Period: Two years from date of Owner Acceptance.
   2. Owner Acceptance will begin when Owner can obtain beneficial use of generator for back-up power.

1.7 MAINTENANCE SERVICE

A. Initial Maintenance Service: Beginning at Owner Acceptance, provide 12 months' full maintenance by skilled employees of manufacturer's designated service organization. Include quarterly exercising to check for proper starting, load transfer, and running under load. Include routine preventive maintenance as recommended by manufacturer and adjusting as required for proper operation. Provide parts and supplies same as those used in the manufacture and installation of original equipment.

1.8 EXTRA MATERIALS

A. Furnish extra materials described below that match products installed and that are packaged with protective covering for storage and identified with labels describing contents.
   1. Fuses: One for every 10 of each type and rating, but no fewer than one of each.
   2. Indicator Lamps: Two for every six of each type used, but no fewer than two of each.
   3. Filters: One set each of lubricating oil, fuel, and combustion-air filters.

PART 2 - PRODUCTS

2.1 MANUFACTURERS

A. Manufacturers: Subject to compliance with requirements, provide products by one of the following:
   1. Caterpillar; Engine Div.
   2. Onan/Cummins Power Generation; Industrial Business Group.
   3. Kohler Co.; Generator Division.

2.2 ENGINE-GENERATOR SET

A. Factory-assembled and -tested, engine-generator set.

B. Mounting Frame: Maintain alignment of mounted components without depending on concrete foundation; and have lifting attachments.

© 2010 Gresham, Smith and Partners. All rights reserved. Use subject to any written agreement with Gresham, Smith and Partners.

1. Rigging Diagram: Inscribed on metal plate permanently attached to mounting frame to indicate location and lifting capacity of each lifting attachment and generator-set center of gravity.

C. Capacities and Characteristics:
1. Nameplates: For each major system component to identify manufacturer's name and address, and model and serial number of component.

D. Generator-Set Performance:
1. Steady-State Voltage Operational Bandwidth: 3 percent of rated output voltage from no load to full load.
2. Transient Voltage Performance: Not more than 20 percent variation for 50 percent step-load increase or decrease. Voltage shall recover and remain within the steady-state operating band within three seconds.
3. Steady-State Frequency Operational Bandwidth: 0.5 percent of rated frequency from no load to full load.
4. Steady-State Frequency Stability: When system is operating at any constant load within the rated load, there shall be no random speed variations outside the steady-state operational band and no hunting or surging of speed.
5. Transient Frequency Performance: Less than 5 percent variation for 50 percent step-load increase or decrease. Frequency shall recover and remain within the steady-state operating band within five seconds.
6. Output Waveform: At no load, harmonic content measured line to line or line to neutral shall not exceed 5 percent total and 3 percent for single harmonics.
7. Sustained Short-Circuit Current: For a 3-phase, bolted short circuit at system output terminals, system shall supply a minimum of 250 percent of rated full-load current for not less than 10 seconds and then clear the fault automatically, without damage to generator system components. Provide permanent magnet or AREP excitation for power source to voltage regulator.
8. Start Time: Comply with NFPA 110, Type 10, Class 48 system requirements. Start time shall be sufficient to allow transfer switches to transfer to generator power within 10 seconds of loss of normal (utility) power.

2.3 ENGINE

A. Fuel: Fuel oil, Grade DF-2.

B. Rated Engine Speed: 1800 rpm.

C. Maximum Piston Speed for Four-Cycle Engines: 2250 fpm (11.4 m/s).

D. Lubrication System: The following items are mounted on engine or skid:
1. Filter and Strainer: Rated to remove 90 percent of particles 5 micrometers and smaller while passing full flow.
2. Thermostatic Control Valve: Control flow in system to maintain optimum oil temperature. Unit shall be capable of full flow and is designed to be fail-safe.
3. Crankcase Drain: Arranged for complete gravity drainage to an easily removable container with no disassembly and without use of pumps, siphons, special tools, or appliances.

© 2010 Gresham, Smith and Partners. All rights reserved. Use subject to any written agreement with Gresham, Smith and Partners.

E. Engine Fuel System:
   1. Main Fuel Pump: Mounted on engine. Pump ensures adequate primary fuel flow under starting and load conditions.
   2. Relief-Bypass Valve: Automatically regulates pressure in fuel line and returns excess fuel to source.

F. Coolant Jacket Heater: Tank type with convection flow. Comply with NFPA 110 requirements for Level 1 equipment for heater capacity. Provide wattage to maintain minimum water temperature with integral thermostatic control, sized to maintain engine jacket water at 90 degrees Fahrenheit, and suitable for operation on 208 volts single phase AC. Heater shall be automatically connected to maintain jacket water temperature. All prime mover heaters shall be automatically deactivated while the prime mover is running.

G. Governor: Adjustable isochronous, with speed sensing. Engine speed to be maintained within 0.5 percent, steady state, and 5 percent, no load to full load, with recovery to steady state within 2 seconds following sudden load changes. To be equipped with means for manual operation and adjustment.

H. Cooling System: Closed loop, liquid cooled, with radiator factory mounted on engine-generator-set mounting frame and integral engine-driven coolant pump.
   1. Coolant: Solution of 50 percent ethylene-glycol-based antifreeze and 50 percent water, with anticorrosion additives as recommended by engine manufacturer.
   2. Size of Radiator: Adequate to contain expansion of total system coolant from cold start to 110 percent load condition.
   3. Temperature Control: Self-contained, thermostatic-control valve modulates coolant flow automatically to maintain optimum constant coolant temperature as recommended by engine manufacturer.
   4. Coolant Hose: Flexible assembly with inside surface of nonporous rubber and outer covering of aging-, ultraviolet-, and abrasion-resistant fabric.
      a. Rating: 50-psig (345-kPa) maximum working pressure with coolant at 180 deg F (82 deg C), and noncollapsible under vacuum.
      b. End Fittings: Flanges or steel pipe nipples with clamps to suit piping and equipment connections.

I. Muffler/Silencer: Critical type, sized as recommended by engine manufacturer and selected with exhaust piping system to not exceed engine manufacturer's engine backpressure requirements as installed and configured in the field.
   1. Minimum sound attenuation of 25 dB at 500 Hz.
   2. Sound level measured at a distance of 10 feet (3 m) from exhaust discharge after installation is complete shall be 85 dBA or less.

J. Air-Intake Filter: Heavy-duty, engine-mounted air cleaner with replaceable dry-filter element and "blocked filter" indicator.

K. Starting System: 24-V electric, with negative ground.

© 2010 Gresham, Smith and Partners. All rights reserved. Use subject to any written agreement with Gresham, Smith and Partners.

1. Components: Sized so they will not be damaged during a full engine-cranking cycle with ambient temperature at maximum specified in Part 1 "Project Conditions" Article.
2. Cranking Motor: Heavy-duty unit that automatically engages and releases from engine flywheel without binding.
3. Cranking Cycle: As required by NFPA 110 for system level specified.
4. Battery: Adequate capacity within ambient temperature range specified in Part 1 "Project Conditions" Article to provide specified cranking cycle at least three times without recharging. Battery to be maintenance free type lead-acid, 210 ampere-hours minimum capacity.
5. Battery Cable: Size as recommended by engine manufacturer for cable length indicated. Include required interconnecting conductors and connection accessories.
6. Battery Rack: Factory fabricated of metal with acid-resistant finish. Thermostatically controlled heater shall be arranged to maintain battery above 10 deg C regardless of external ambient temperature within range specified in Part 1 "Project Conditions" Article. Include accessories required to support and fasten batteries in place.
7. Battery-Charging Alternator: Factory mounted on engine with solid-state voltage regulation and 35-A minimum continuous rating.
8. Battery Charger: Current-limiting, automatic-equalizing and float-charging type. Unit shall comply with UL 1236 and include the following features:
   a. Operation: Equalizing-charging rate of 10 A shall be initiated automatically after battery has lost charge until an adjustable equalizing voltage is achieved at battery terminals. Unit shall then be automatically switched to a lower float-charging mode and shall continue to operate in that mode until battery is discharged again.
   b. Automatic Temperature Compensation: Adjust float and equalize voltages for variations in ambient temperature from minus 40 deg C to plus 60 deg C to prevent overcharging at high temperatures and undercharging at low temperatures.
   c. Automatic Voltage Regulation: Maintain constant output voltage regardless of input voltage variations up to plus or minus 10 percent.
   d. Ammeter and Voltmeter: Flush mounted in door. Meters shall indicate charging rates.
   e. Safety Functions: Sense abnormally low-battery voltage and close contacts providing low battery voltage indication on control and monitoring panel. Sense high battery voltage and loss of ac input or dc output of battery charger. Either condition shall close contacts that provide a battery-charger malfunction indication at system control and monitoring panel.
   f. Enclosure and Mounting: NEMA 250, Type 1, wall-mounted cabinet.

2.4 FUEL OIL STORAGE

A. Comply with NFPA 30.

B. Base-Mounted Fuel Oil Tank: Factory installed and piped, complying with UL 142 fuel oil tank. Features include the following:
   1. Tank level indicator.

© 2010 Gresham, Smith and Partners. All rights reserved. Use subject to any written agreement with Gresham, Smith and Partners.

2. Low-Level Alarm Float Sensor: Set to alarm at 75 percent of full capacity.
3. Capacity: Fuel for a minimum of 24 hours' continuous operation at 100 percent rated power output.
4. Vandal-resistant fill cap.
5. Containment Provisions: Double walled tank sized to contain 150 percent of tank capacity. Provide leak detector with remote alarm panel.

2.5 CONTROL AND MONITORING

A. Automatic Starting System Sequence of Operation: When mode-selector switch on the control and monitoring panel is in the automatic position, remote-control contacts in one or more separate automatic transfer switches initiate starting and stopping of generator set. When mode-selector switch is switched to the on position, generator set starts. The off position of same switch initiates generator-set shutdown. When generator set is running, specified system or equipment failures or derangements automatically shut down generator set and initiate alarms. Operation of a remote emergency-stop switch also shuts down generator set.

B. Configuration: Operating and safety indications, protective devices, basic system controls, and engine gages shall be grouped in a common control and monitoring panel mounted on the generator set. Mounting method shall isolate the control panel from generator-set vibration.

C. Indicating and Protective Devices and Controls: As required by NFPA 110 for Level 1 system, and the following:
1. AC voltmeter.
2. AC ammeter.
3. AC frequency meter.
4. DC voltmeter (alternator battery charging).
5. Engine-coolant temperature gage.
6. Engine lubricating-oil pressure gage.
7. Running-time meter.
8. Ammeter-voltmeter, phase-selector switch(es).
9. Generator-voltage adjusting rheostat.
10. Generator overload.

D. Connection to Data Link: A separate terminal block, factory wired to Form C dry contacts, for each alarm and status indication is reserved for connections for data-link transmission of indications to remote data terminals.

E. Common Remote Audible Alarm: Comply with NFPA 110 requirements for Level 1 systems. Include necessary contacts and terminals in control and monitoring panel.
1. Overcrank shutdown.
2. Coolant low-temperature alarm.
3. Control switch not in auto position.
4. Battery-charger malfunction alarm.
5. Battery low-voltage alarm.

© 2010 Gresham, Smith and Partners. All rights reserved. Use subject to any written agreement with Gresham, Smith and Partners.

F. Remote Alarm Annunciator: Comply with NFPA 99. An LED labeled with proper alarm conditions shall identify each alarm event and a common audible signal shall sound for each alarm condition. Silencing switch in face of panel shall silence signal without altering visual indication. Connect so that after an alarm is silenced, clearing of initiating condition will reactivate alarm until silencing switch is reset. Cabinet and faceplate are surface-mounting type.

G. Remote Emergency-Stop Switch: For surface; wall mounted, unless otherwise indicated; and labeled. Push button shall be protected from accidental operation.

2.6 GENERATOR OVERCURRENT AND FAULT PROTECTION

A. Generator Circuit Breaker: Molded-case, electronic-trip type; 100 percent rated; complying with UL 489.
   1. Tripping Characteristics: Adjustable long-time and short-time delay and instantaneous.
   2. Trip Settings: Selected to coordinate with generator thermal damage curve.
   3. Mounting: Adjacent to or integrated with control and monitoring panel.

2.7 GENERATOR, EXCITER, AND VOLTAGE REGULATOR

A. Comply with NEMA MG 1.

B. Drive: Generator shaft shall be directly connected to engine shaft. Exciter shall be rotated integrally with generator rotor.

C. Electrical Insulation: Class H or Class F.

D. Stator-Winding Leads: Brought out to terminal box to permit future reconnection for other voltages if required.

E. Construction shall prevent mechanical, electrical, and thermal damage due to vibration, overspeed up to 125 percent of rating, and heat during operation at 110 percent of rated capacity.

F. Enclosure: Dripproof.

G. Voltage Regulator: Solid-state type, separate from exciter, providing performance as specified.
   1. Adjusting rheostat on control and monitoring panel shall provide plus or minus 5 percent adjustment of output-voltage operating band.

H. Strip Heater: Thermostatically controlled unit arranged to maintain stator windings above dew point.

I. Windings: Two-thirds pitch stator winding and fully linked amortisseur winding.

J. Subtransient Reactance: 12 percent, maximum.

© 2010 Gresham, Smith and Partners. All rights reserved. Use subject to any written agreement with Gresham, Smith and Partners.

K. Governor: Provide electronic governor.

L. PMG: Provide Permanent Magnet or AREP Generator.

2.8 OUTDOOR GENERATOR-SET ENCLOSURE

A. Description: Vandal-resistant, weatherproof steel housing, wind resistant up to 100 mph (160 km/h). Multiple panels shall be lockable and provide adequate access to components requiring maintenance. Panels shall be hinged and removable by one person without tools. Instruments and control shall be mounted within enclosure.

B. Engine Cooling Airflow through Enclosure: Maintain temperature rise of system components within required limits when unit operates at 110 percent of rated load for 2 hours with ambient temperature at top of range specified in system service conditions.
1. Automatic Gravity Dampers: At engine cooling-air inlet and discharge. Dampers shall be closed to reduce enclosure heat loss in cold weather when unit is not operating.

C. Interior Lights with Switch: Factory-wired, vaporproof-type fixtures within housing; arranged to illuminate controls and accessible interior. Arrange for external electrical connection.
1. AC lighting system and connection point for operation when remote source is available.

D. Convenience Outlets: Factory wired, GFCI. Arrange for external electrical connection.

E. Load Center:
1. Provide enclosure with electrical load center. All generator and enclosure accessories shall be prewired to load center. Load center shall be rated at 60 amp, 120/208V-1 Phase, 3-wire.

F. Sound Attenuated Enclosure:
1. Provide generator set with a sound attenuated enclosure to provide a sound level no greater than 75 dBA. This sound level shall represent the average measurement taken at eight points located equidistant, seven meters from the set, operating at full load.

2.9 VIBRATION ISOLATION DEVICES

A. Restrained Spring Isolators: Freestanding, steel, open-spring isolators or elastomeric type restraint.
1. Housing: Steel with resilient vertical-limit stops to prevent spring extension due to wind loads or if weight is removed; factory-drilled baseplate bonded to 1/4-inch- (6-mm-) thick, elastomeric isolator pad attached to baseplate underside; and adjustable equipment mounting and leveling bolt that acts as blocking during installation.
2. Outside Spring Diameter: Not less than 80 percent of compressed height of the spring at rated load.

© 2010 Gresham, Smith and Partners. All rights reserved. Use subject to any written agreement with Gresham, Smith and Partners.

3. Minimum Additional Travel: 50 percent of required deflection at rated load.
4. Lateral Stiffness: More than 80 percent of rated vertical stiffness.
5. Overload Capacity: Support 200 percent of rated load, fully compressed, without deformation or failure.

2.10 FINISHES

A. Indoor and Outdoor Enclosures and Components: Manufacturer's standard finish over corrosion-resistant pretreatment and compatible primer.

2.11 SOURCE QUALITY CONTROL

A. Prototype Testing: Factory test engine-generator set using same engine model, constructed of identical or equivalent components and equipped with identical or equivalent accessories.
1. Tests: Comply with NFPA 110, Level 1 Energy Converters and with IEEE 115.
2. Report factory test results within 10 days of completion of test.

PART 3 - EXECUTION

3.1 EXAMINATION

A. Examine areas, equipment bases, and conditions, with Installer present, for compliance with requirements for installation and other conditions affecting packaged engine-generator performance.

B. Examine roughing-in of piping systems and electrical connections. Verify actual locations of connections before packaged engine-generator installation.

C. Proceed with installation only after unsatisfactory conditions have been corrected.

3.2 INSTALLATION

A. Comply with NFPA 110.

B. Install packaged engine generator to provide access, without removing connections or accessories, for periodic maintenance.

C. Install packaged engine generator with elastomeric or restrained spring isolators having a minimum deflection of 1 inch (25 mm). Secure sets to anchor bolts installed in concrete bases.

3.3 FIELD QUALITY CONTROL

A. Manufacturer's Field Service: Engage a factory-authorized service representative to inspect, test, and adjust components, assemblies, and equipment installations, including connections. Report results in writing.

© 2010 Gresham, Smith and Partners. All rights reserved. Use subject to any written agreement with Gresham, Smith and Partners.

B. Tests and Inspections:
   1. NFPA 110 Acceptance Tests: Perform tests required by NFPA 110 that are additional to those specified here including, but not limited to, the following:
      a. Load test using portable resistive type test bank for eight continuous hours minimum. The initial portion of the eight hour test shall be in strict compliance with NFPA 110, Chapter 5-13 – Installation Acceptance. Any remaining portion of the eight hour test shall be tested at 100 percent full load. All test results are to be for each phase. Utilize the services of the system manufacturer's authorized representative for check-out and load tests. Test shall be performed at the site after the entire system is assembled. Factory testing shall only be acceptable for reactive testing. Provide a full tank of diesel fuel prior to test and refill tank with diesel fuel after test. Provide written notification delivered to the Owner a minimum of 14 days prior to the test.
      b. During test, in addition to the requirements of NFPA 110, Chapter 5-13, record the following at 15 minute intervals:
         1) Kilowatts.
         2) Amperes.
         3) Voltage.
         4) Coolant temperature.
         5) Ambient temperature.
         6) Frequency.
         7) Oil pressure.
         8) Engine speed.
      c. Test alarms and shutdown circuits by simulating conditions after the eight continuous running hours have been completed.
      d. Should the engine generator fail any time during any portion of the test period, the entire test shall be repeated after necessary repairs and adjustments have been made.
      e. Engine generator shall have a minimum of 24 hours runtime at time of Owner Acceptance. Provide fuel required for this runtime.
   2. Battery Tests: Equalize charging of battery cells according to manufacturer's written instructions. Record individual cell voltages.
      a. Measure charging voltage and voltages between available battery terminals for full-charging and float-charging conditions. Check electrolyte level and specific gravity under both conditions.
      b. Test for contact integrity of all connectors. Perform an integrity load test and a capacity load test for the battery.
      c. Verify acceptance of charge for each element of the battery after discharge.
      d. Verify that measurements are within manufacturer's specifications.
   3. Battery-Charger Tests: Verify specified rates of charge for both equalizing and float-charging conditions.
   4. System Integrity Tests: Methodically verify proper installation, connection, and integrity of each element of engine-generator system before and during system operation. Check for air, exhaust, and fluid leaks.
   5. Exhaust Emissions Test: Comply with applicable government test criteria.

© 2010 Gresham, Smith and Partners. All rights reserved. Use subject to any written agreement with Gresham, Smith and Partners.

6. Voltage and Frequency Transient Stability Tests: Use recording oscilloscope to measure voltage and frequency transients for 50 and 100 percent step-load increases and decreases, and verify that performance is as specified.
7. Harmonic-Content Tests: Measure harmonic content of output voltage under 25 percent and at 100 percent of rated linear load. Verify that harmonic content is within specified limits.
8. Noise Level Tests: Measure A-weighted level of noise emanating from generator-set installation, including engine exhaust and cooling-air intake and discharge, at four locations, seven meters in each direction from the generator set, and compare measured levels with required values.

C. Test instruments shall have been calibrated within the last 12 months, traceable to standards of NIST, and adequate for making positive observation of test results. Make calibration records available for examination on request.

D. Operational Test: After electrical circuitry has been energized, start units to confirm proper motor rotation and unit operation.

E. Test and adjust controls and safeties. Replace damaged and malfunctioning controls and equipment.

F. Retest: Correct deficiencies identified by tests and observations and retest until specified requirements are met.

G. Report results of tests and inspections in writing. Record adjustable relay settings and measured insulation resistances, time delays, and other values and observations. Attach a label or tag to each tested component indicating satisfactory completion of tests.

H. Infrared Scanning: After Substantial Completion, but not more than 60 days after Final Acceptance, installing contractor shall perform an infrared scan of each power wiring termination and each bus connection under load conditions. Remove all access panels so terminations and connections are accessible to portable scanner.
1. Instrument: Use an infrared scanning device designed to measure temperature or to detect significant deviations from normal values. Provide calibration record for device.
2. Record of Infrared Scanning: Prepare a certified report that identifies terminations and connections checked and that describes scanning results. Include notation of deficiencies detected, remedial action taken, and observations after remedial action.

3.4 CLEANING

A. On completion of installation, inspect system components. Remove paint splatters and other spots, dirt, and debris. Repair damaged finish to match original finish. Clean components internally using methods and materials recommended by manufacturer.

B. Replace oil, fuel filters, and oil filters at time of Owner Acceptance.

© 2010 Gresham, Smith and Partners. All rights reserved. Use subject to any written agreement with Gresham, Smith and Partners.

3.5 DEMONSTRATION

A. Engage a factory-authorized service representative to train Owner's maintenance personnel to adjust, operate, and maintain packaged engine generators. Provide a minimum of eight hours training. Provide Owner with two weeks advance notice for training.

END OF SECTION 26 3213

© 2010 Gresham, Smith and Partners. All rights reserved. Use subject to any written agreement with Gresham, Smith and Partners.

PART 1 - GENERAL

1.1 RELATED DOCUMENTS

A. Drawings and general provisions of the Contract, including General and Supplementary Conditions and Division 01 Specification Sections, apply to this Section.

B. Provide written description of any deviations or exceptions taken to this Section when bids are submitted.

C. UPS and battery equipment must fit in available space as indicated on the Drawings.

1.2 SUMMARY

A. This Section includes three-phase, on-line, double-conversion, UPS installations complete with transient voltage surge suppression, input harmonics reduction, rectifier-charger, battery, battery disconnect device, inverter, static bypass transfer switch, external maintenance bypass/isolation switch, output isolation transformer, remote UPS monitoring provisions, remote battery monitoring, 40 KW/42 KVA minimum battery runtime of 10 minutes, with 0 to 60 seconds adjustable time delay on return to normal A/C power..

1.3 DEFINITIONS

A. EMI: Electromagnetic interference.

B. LCD: Liquid-crystal display.

C. LED: Light-emitting diode.

D. THD: Total harmonic distortion.

E. UPS: Uninterruptible power supply.

1.4 SUBMITTALS

A. Product Data: Include data on features, components, ratings, and performance for each UPS component indicated.

B. Shop Drawings: Detail assemblies of equipment indicating dimensions, weights, components, and location and identification of each field connection. Show access, workspace, and clearance requirements; details of control panels; and battery arrangement.
   1. Wiring Diagrams: Power, signal, and control wiring. Differentiate between field-installed and factory-installed wiring and components.

C. Qualification Data: For manufacturer.

© 2010 Gresham, Smith and Partners. All rights reserved. Use subject to any written agreement with Gresham, Smith and Partners.

D. Manufacturer Certificates: For each product, signed by manufacturers.

E. Factory Test Reports: Comply with specified requirements.

F. Field Quality-Control and Performance Test Reports: Indicate test results compared with specified performance requirements, and provide justification and resolution of differences if values do not agree.

G. Operation and Maintenance Data: For UPS units to include in emergency, operation, and maintenance manuals. In addition, include the following:
   1. Lists of spare parts and replacement components recommended being stored at Project site for ready access.
   2. Detailed operating instructions covering operation under both normal and abnormal conditions.

H. Warranties: Special warranties specified in this Section.

1.5 QUALITY ASSURANCE

A. Installer Qualifications: Manufacturer's authorized representative who is trained and approved for both installation and maintenance of units required for this Project.

B. Manufacturer Qualifications: A qualified manufacturer. Maintain, within 100 miles of Project site, a service center capable of providing training, parts, and emergency maintenance repairs with eight hours' maximum response time.

C. Source Limitations: Obtain the UPS and associated components specified in this Section from a single manufacturer with responsibility for entire UPS installation.

D. Electrical Components, Devices, and Accessories: Listed and labeled as defined in NFPA 70, Article 100, by a testing agency acceptable to authorities having jurisdiction, and marked for intended use.

E. UL Compliance: Listed and labeled under UL 1778.

F. NFPA Compliance: Mark UPS components as suitable for installation in computer rooms according to NFPA 75.

1.6 DELIVERY, STORAGE, AND HANDLING

A. Deliver equipment in fully enclosed vehicles after specified environmental conditions have been permanently established in spaces where equipment is to be placed.

B. Store equipment in spaces with environments controlled within manufacturer's ambient temperature and humidity tolerances for non-operating equipment.

1.7 WARRANTY

© 2010 Gresham, Smith and Partners. All rights reserved. Use subject to any written agreement with Gresham, Smith and Partners.

A. Special Battery Warranties: Specified form in which manufacturer and Installer agree to repair or replace UPS system storage batteries that fail in materials or workmanship within specified warranty period of five years from date of Substantial Completion.
   1. Warranted Cycle Life for Valve-Regulated, Lead-Acid Batteries: Equal to or greater than that represented in manufacturer's published table, including figures corresponding to the following, based on annual average battery temperature of 77 deg F (25 deg C):

Discharge Rate	Discharge Duration	Discharge End Voltage	Cycle Life
15 minutes	45 seconds	1.67	120 cycles

B. Special UPS Warranties: Specified form in which manufacturer and Installer agree to repair or replace components that fail in materials or workmanship within special warranty period.
   1. Special Warranty Period: Two years from date of Substantial Completion.

1.8 EXTRA MATERIALS

A. Furnish extra materials described below that match products installed and that are packaged with protective covering for storage and identified with labels describing contents. Deliver extra materials to Owner.
   1. Fuses: One for every 10 of each type and rating, but no fewer than 1 of each.
   2. Cabinet Ventilation Filters: One complete set.

PART 2 - PRODUCTS

2.1 MANUFACTURERS

A. Manufacturers: Subject to compliance with requirements, provide products by one of the following manufacturers specified:
   1. Powerware/Eaton.
   2. Mitsubishi Electric, Automation Division.
   3. Liebert Corporation.

2.2 PERFORMANCE DESCRIPTION

A. Automatic operation includes the following:
   1. Normal Conditions: Supply the load with ac power flowing from the normal ac power input terminals, through the rectifier-charger and inverter, with the battery connected in parallel with the rectifier-charger output.
   2. Abnormal Supply Conditions: If normal ac supply deviates from specified and adjustable voltage, voltage waveform, or frequency limits, the battery supplies energy to maintain constant, regulated inverter ac power output to the load without switching or disturbance.

© 2010 Gresham, Smith and Partners. All rights reserved. Use subject to any written agreement with Gresham, Smith and Partners.

3. If normal power fails, energy supplied by the battery through the inverter continues supply-regulated ac power to the load without switching or disturbance.
4. When power is restored at the normal supply terminals of the system, controls automatically synchronize the inverter with the external source before transferring the load. Provide adjustable 0 to 60 second time delay before transferring load to normal power; set at 30 seconds. The rectifier-charger then supplies power to the load through the inverter and simultaneously recharges the battery.
5. If the battery becomes discharged and normal supply is available, the rectifier-charger charges the battery. On reaching full charge, the rectifier-charger automatically shifts to float-charge mode.
6. If any element of the UPS system fails and power is available at the normal supply terminals of the system, the static bypass transfer switch switches the load to the normal ac supply circuit without disturbance or interruption.
7. If a fault occurs in the system supplied by the UPS, and current flows in excess of the overload rating of the UPS system, the static bypass transfer switch operates to bypass the fault current to the normal ac supply circuit for fault clearing.
8. When the fault has cleared, the static bypass transfer switch returns the load to the UPS system.
9. If the battery is disconnected, the UPS continues to supply power to the load with no degradation of its regulation of voltage and frequency of the output bus.

B. Manual operation includes the following:
1. Turning the inverter off causes the static bypass transfer switch to transfer the load directly to the normal ac supply circuit without disturbance or interruption.
2. Turning the inverter on causes the static bypass transfer switch to transfer the load to the inverter.

C. Maintenance Bypass/Isolation Switch Operation: Switch is interlocked so it cannot be operated unless the static bypass transfer switch is in the bypass mode. Device provides manual selection between the following three conditions without interrupting supply to the load during switching:
1. Full Isolation: Load is supplied, bypassing the UPS. Normal UPS ac input circuit, static bypass transfer switch, and UPS load terminals are completely disconnected from external circuits.
2. Maintenance Bypass: Load is supplied, bypassing the UPS. UPS ac supply terminals are energized to permit operational checking, but system load terminals are isolated from the load.
3. Normal: Normal UPS ac supply terminals are energized and the load is supplied through either the static bypass transfer switch and the UPS rectifier-charger and inverter, or the battery and the inverter.

2.3 SERVICE CONDITIONS

A. Environmental Conditions: The UPS shall be capable of operating continuously in the following environmental conditions without mechanical or electrical damage or degradation of operating capability, except battery performance.

© 2010 Gresham, Smith and Partners. All rights reserved. Use subject to any written agreement with Gresham, Smith and Partners.

1. Ambient Temperature for Electronic Components: 32 to 104 deg F (0 to 40 deg C).
2. Ambient Temperature for Battery: 41 to 95 deg F (5 to 35 deg C). Average is 77 deg F (25 deg C).
3. Relative Humidity: 0 to 95 percent, noncondensing.
4. Altitude: Sea level to 4000 feet (1220 m).

2.4 PERFORMANCE REQUIREMENTS

A. The UPS shall perform as specified in this Article while supplying rated full-load current, composed of any combination of linear and nonlinear load, up to 100 percent nonlinear load with a load crest factor of 3.0, under the following conditions or combinations of the following conditions:
1. Inverter is switched to battery source.
2. Steady-state ac input voltage deviates up to plus or minus 10 percent from nominal voltage.
3. Steady-state input frequency deviates up to plus or minus 5 percent from nominal frequency.
4. THD of input voltage is 15 percent or more with a minimum crest factor of 3.0, and the largest single harmonic component is a minimum of 5 percent of the fundamental value.
5. Load is 50 percent unbalanced continuously.

B. Minimum Duration of Supply: If battery is sole energy source supplying rated full UPS load current at 80 percent power factor, duration of supply is 10 minutes.

C. Input Voltage Tolerance: System steady-state and transient output performance remains within specified tolerances when steady-state ac input voltage varies plus 10, minus 15 percent from nominal voltage.

D. Maximum Energizing Inrush Current: Six times the full-load current.

E. Maximum AC Output-Voltage Regulation for Loads up to 50 Percent Unbalanced: Plus or minus 2 percent over the full range of battery voltage.

F. Output Frequency: 60 Hz, plus or minus 0.5 percent over the full range of input voltage, load, and battery voltage.

G. Limitation of harmonic distortion of input current to the UPS shall be as follows:
1. Description: Either a tuned harmonic filter or an arrangement of rectifier-charger circuits shall limit THD to 5 percent, maximum, at rated full UPS load current, for utility power source or generator power source.

© 2010 Gresham, Smith and Partners. All rights reserved. Use subject to any written agreement with Gresham, Smith and Partners.

H. Maximum Harmonic Content of Output-Voltage Waveform: 5 percent RMS total and 3 percent RMS for any single harmonic, for 100 percent rated nonlinear load current with a load crest factor of 3.0.

I. Minimum Overload Capacity of UPS at Rated Voltage: 125 percent of rated full load for 10 minutes, and 150 percent for 30 seconds in all operating modes.

J. Maximum Output-Voltage Transient Excursions from Rated Value: For the following instantaneous load changes, stated as percentages of rated full UPS load, voltage shall remain within stated percentages of rated value and recover to, and remain within, plus or minus 2 percent of that value within 100 ms:
   1. 50 Percent: Plus or minus 5 percent.
   2. 100 Percent: Plus or minus 5 percent.
   3. Loss of AC Input Power: Plus or minus 1 percent.
   4. Restoration of AC Input Power: Plus or minus 1 percent.

K. Input Power Factor: A minimum of 0.85 lagging when supply voltage and current are at nominal rated values and the UPS is supplying rated full-load current.

L. EMI Emissions: Comply with FCC Rules and Regulations, and with 47 CFR 15 for Class A equipment.

2.5 UPS SYSTEMS

A. Manufacturers:
   1. Powerware/Eaton.
   2. Mitsubishi Electric Automation, Inc.
   3. Liebert Corporation.

B. Electronic Equipment: Solid-state devices using hermetically sealed, semiconductor elements. Devices include rectifier-charger, inverter, static bypass transfer switch, and system controls.

C. Enclosures: Comply with NEMA 250, Type 1, unless otherwise indicated.

D. Control Assemblies: Mount on modular plug-ins, readily accessible for maintenance.

E. Surge Suppression: Protect internal UPS components from surges that enter at each ac power input connection including main disconnect switch, static bypass transfer switch, and maintenance bypass/isolation switch. Protect rectifier-charger, inverter, controls, and output components.
   1. Use factory-installed surge suppressors tested according to IEEE C62.41, Category B.
   2. Additional Surge Protection: Protect internal UPS components from low-frequency, high-energy voltage surges described in IEEE C62.41. Design the circuits connecting with external power sources and select circuit elements, conductors, conventional surge suppressors, and rectifier components and

© 2010 Gresham, Smith and Partners. All rights reserved. Use subject to any written agreement with Gresham, Smith and Partners.

controls so input assemblies will have adequate mechanical strength and thermal and current-carrying capacity to withstand stresses imposed by 40-Hz, 180 percent voltage surges described in IEEE C62.41.

F. Maintainability Features: Mount rectifier-charger and inverter sections and the static bypass transfer switch on modular plug-ins, readily accessible for maintenance.

G. UPS Cabinet Ventilation: Redundant fans or blowers draw in ambient air near the bottom of cabinet and discharge it near the top rear.

2.6 RECTIFIER-CHARGER

A. Capacity: Adequate to supply the inverter during rated full output load conditions and simultaneously recharge the battery from fully discharged condition to 95 percent of full charge within 10 times the rated discharge time for duration of supply under battery power at full load.

B. Output Ripple: Limited by output filtration to less than 0.5 percent of rated current, peak to peak.

C. Rectifier-Charger Control Circuits: Immune to frequency variations within rated frequency ranges of normal and emergency power sources.
1. Response Time: Field adjustable for maximum compatibility with local generator-set power source.

D. Battery Float-Charging Conditions: Comply with battery manufacturer's written instructions for battery terminal voltage and charging current required for maximum battery life.

2.7 INVERTER

A. Description: Pulse-width modulated, with sinusoidal output. Include a bypass phase synchronization window adjustment to optimize compatibility with local engine-generator-set power source.

2.8 STATIC BYPASS TRANSFER SWITCH

A. Description: Solid-state switching device providing uninterrupted transfer. A contactor or electrically operated circuit breaker automatically provides electrical isolation for the switch.

B. Switch Rating: Continuous duty at the rated full UPS load current, minimum.

© 2010 Gresham, Smith and Partners. All rights reserved. Use subject to any written agreement with Gresham, Smith and Partners.

2.9 BATTERY

A. Description: Valve-regulated, premium, heavy-duty, recombinant, lead-calcium units, factory assembled in an isolated compartment or in a separate matching cabinet, complete with battery disconnect switch.
   1. Arrange for ready removal of battery assembly from cabinet for testing and inspecting.
   2. Provide minimum 10 minute run time at full load.

2.10 CONTROLS AND INDICATIONS

A. Description: Group displays, indications, and basic system controls on a common control panel on front of UPS enclosure.

B. Minimum displays, indicating devices, and controls include those in lists below. Provide sensors, transducers, terminals, relays, and wiring required to support listed items. Alarms include audible signals and visual displays.

C. Indications: Plain-language messages on a digital LCD or LED.
   1. Quantitative indications shall include the following:
   2. Input voltage, each phase, line to line.
      a. Input current, each phase, line to line.
      b. Bypass input voltage, each phase, line to line.
      c. Bypass input frequency.
      d. System output voltage, each phase, line to line.
      e. System output current, each phase.
      f. System output frequency.
      g. DC bus voltage.
      h. Battery current and direction (charge/discharge).
      i. Elapsed time discharging battery.
   3. Basic status condition indications shall include the following:
      a. Normal operation.
      b. Load-on bypass.
      c. Load-on battery.
      d. Inverter off.
      e. Alarm condition.
   4. Alarm indications shall include the following:
      a. Bypass ac input overvoltage or undervoltage.
      b. Bypass ac input overfrequency or underfrequency.
      c. Bypass ac input and inverter out of synchronization.
      d. Bypass ac input wrong-phase rotation.
      e. Bypass ac input single-phase condition.
      f. Bypass ac input filter fuse blown.
      g. Internal frequency standard in use.
      h. Battery system alarm.
      i. Control power failure.
      j. Fan failure.

© 2010 Gresham, Smith and Partners. All rights reserved. Use subject to any written agreement with Gresham, Smith and Partners.

k. UPS overload.
l. Battery-charging control faulty.
m. Input overvoltage or undervoltage.
n. Input transformer overtemperature.
o. Input circuit breaker tripped.
p. Input wrong-phase rotation.
q. Input single-phase condition.
r. Approaching end of battery operation.
s. Battery undervoltage shutdown.
t. Maximum battery voltage.
u. Inverter fuse blown.
v. Inverter transformer overtemperature.
w. Inverter overtemperature.
x. Static bypass transfer switch overtemperature.
y. Inverter power supply fault.
z. Inverter transistors out of saturation.
aa. Identification of faulty inverter section/leg.
bb. Inverter output overvoltage or undervoltage.
cc. UPS overload shutdown.
dd. Inverter current sensor fault.
ee. Inverter output contactor open.
ff. Inverter current limit.

5. Controls shall include the following:
   a. Inverter on-off.
   b. UPS start.
   c. Battery test.
   d. Alarm silence/reset.
   e. Output-voltage adjustment.

D. Dry-form "C" contacts shall be available for remote indication of the following conditions:
   1. UPS on battery.
   2. UPS on-line.
   3. UPS load-on bypass.
   4. UPS in alarm condition.
   5. UPS off (maintenance bypass closed).

E. Emergency Power Off Switch: Capable of local operation and operation by means of activation by external dry contacts.

2.11 MAINTENANCE BYPASS/ISOLATION SWITCH

A. Description: Manually operated switch or arrangement of switching devices with mechanically actuated contact mechanism arranged to route the flow of power to the load around the rectifier-charger, inverter, and static bypass transfer switch.
   1. Switch shall be electrically and mechanically interlocked to prevent interrupting power to the load when switching to bypass mode.
   2. Switch shall electrically isolate other UPS components to permit safe servicing.

© 2010 Gresham, Smith and Partners. All rights reserved. Use subject to any written agreement with Gresham, Smith and Partners.

B. Comply with NEMA PB 2 and UL 891.

C. Switch Rating: Continuous duty at rated full UPS load current.

D. Mounting Provisions: Floor-mounted unit.

E. Key interlock requires unlocking maintenance bypass/isolation switch before switching from normal position with key that is released only when the UPS is bypassed by the static bypass transfer switch. Lock is designed specifically for mechanical and electrical component interlocking.

2.12 OUTPUT ISOLATION TRANSFORMER

A. Description: Shielded unit with low forward transfer impedance up to 3 kHz, minimum. Include the following features:
1. Comply with applicable portions of UL 1561, including requirements for nonlinear load current-handling capability for a K-factor of approximately 20.
2. Output Impedance at Fundamental Frequency: Between 3 and 4 percent.
3. Regulation: 5 percent, maximum, at rated nonlinear load current.
4. Full-Load Efficiency at Rated Nonlinear Load Current: 96 percent, minimum.
5. Electrostatic Shielding of Windings: Independent for each winding.
6. Coil Leads: Physically arranged for minimum interlead capacitance.
7. Shield Grounding Terminal: Separately mounted; labeled "Shield Ground."
8. Capacitive Coupling between Primary and Secondary: 33 picofarads, maximum, over a frequency range of 20 Hz to 1 MHz.

2.13 MONITORING BY REMOTE STATUS AND ALARM PANEL

A. Description: Labeled LEDs on panel faceplate indicate 15 basic status conditions. Audible signal indicates alarm conditions. Silencing switch in face of panel silences signal without altering visual indication.
1. Cabinet and Faceplate: Surface or flush mounted to suit mounting conditions indicated.

2.14 MONITORING BY REMOTE COMPUTER

A. Description: Communication module in unit control panel provides capability for remote monitoring of status, parameters, and alarms specified in "Controls and Indications" Article. The remote computer and the connecting signal wiring are not included in this Section. Include the following features:
1. Connectors and network interface units or modems for data transmission via RS-232 link.
2. Software designed for control and monitoring of UPS functions and to provide on-screen explanations, interpretations, diagnosis, action guidance, and instructions for use of monitoring indications and development of meaningful reports. Permit storage and analysis of power-line transient records. Design for windows applications using a personal computer, which is not included in this Section.

© 2010 Gresham, Smith and Partners. All rights reserved. Use subject to any written agreement with Gresham, Smith and Partners.

2.15 BASIC BATTERY MONITORING

A. Manufacturers:
   1. Albercorp; Hawker Siddeley.
   2. BTECH Inc.
   3. MetriXX USA, Inc.
   4. Powerware; an Invensys Company.

B. Battery Ground-Fault Detector: Initiates alarm when resistance to ground of positive or negative bus of battery is less than 5000 ohms.

C. Battery compartment smoke/high-temperature detector initiates an alarm when smoke or a temperature greater than 75 deg C occurs within the compartment.

D. Annunciation of Alarms: At UPS control panel.

2.16 SOURCE QUALITY CONTROL

A. Factory test complete UPS system before shipment. Include the following:
   1. Test and demonstration of all functions, controls, indicators, sensors, and protective devices.
   2. Full-load test.
   3. Transient-load response test.
   4. Overload test.
   5. Power failure test.

B. Observation of Test: Give 14 days' advance notice of tests and provide opportunity for Owner's representative to observe tests at Owner's option.

C. Report test results. Include the following data:
   1. Description of input source and output loads used. Describe actions required to simulate source load variation and various operating conditions and malfunctions.
   2. List of indications, parameter values, and system responses considered satisfactory for each test action. Include tabulation of actual observations during test.
   3. List of instruments and equipment used in factory tests.

PART 3 - EXECUTION

3.1 INSTALLATION

A. Install system components on 4-inch- (100-mm-) high concrete bases.

B. Maintain minimum clearances and workspace at equipment according to manufacturer's written instructions and NFPA 70.

© 2010 Gresham, Smith and Partners. All rights reserved. Use subject to any written agreement with Gresham, Smith and Partners.

C. Connections: Interconnect system components. Make connections to supply and load circuits according to manufacturer's wiring diagrams, unless otherwise indicated.

3.2 GROUNDING

A. Separately Derived Systems: If not part of a listed power supply for a data-processing room, comply with NFPA 70 requirements for connecting to grounding electrodes and for bonding to metallic piping near isolation transformer.

3.3 IDENTIFICATION

A. Identify components and wiring according to Division 26 Section "Identification for Electrical Systems."
   1. Identify each battery cell individually.

3.4 BATTERY EQUALIZATION

A. Equalize charging of battery cells according to manufacturer's written instructions. Record individual-cell voltages.

3.5 FIELD QUALITY CONTROL

A. Manufacturer's Field Service: Engage a factory-authorized service representative to inspect, test, and adjust equipment installation including connections, and to assist in field testing. Report results in writing.

B. Electrical Tests and Inspections: Perform tests and inspections according to manufacturer's written instructions and as listed below to demonstrate condition and performance of each UPS component:
   1. Inspect interiors of enclosures, including the following:
      a. Integrity of mechanical and electrical connections.
      b. Component type and labeling verification.
      c. Ratings of installed components.
   2. Load the system using a variable-load bank to simulate kilovolt amperes, kilowatts, and power factor of loads for unit's rating. Use instruments calibrated, within the previous six months according to NIST standards.
      a. Simulate malfunctions to verify protective device operation.
      b. Test duration of supply on emergency, low-battery voltage shutdown, and transfers and restoration due to normal source failure.
      c. Test harmonic content of input and output current less than 25, 50, and 100 percent of rated loads.
      d. Test output voltage under specified transient-load conditions.
      e. Test efficiency at 50, 75, and 100 percent of rated loads.
      f. Test remote status and alarm panel functions.
      g. Test battery-monitoring system functions.

C. Retest: Correct deficiencies and retest until specified requirements are met.

© 2010 Gresham, Smith and Partners. All rights reserved. Use subject to any written agreement with Gresham, Smith and Partners.

D. Record of Tests and Inspections: Maintain and submit documentation of tests and inspections, including references to manufacturers' written instructions and other test and inspection criteria. Include results of tests, inspections, and retests.

3.6 DEMONSTRATION

A. Engage a factory-authorized service representative to train Owner's maintenance personnel to adjust, operate, and maintain the UPS a minimum of 8 hours.

END OF SECTION 26 3353

© 2010 Gresham, Smith and Partners. All rights reserved. Use subject to any written agreement with Gresham, Smith and Partners.

PART 1 - GENERAL

1.1 RELATED DOCUMENTS

A. Drawings and general provisions of the Contract, including General and Supplementary Conditions and Division 01 Specification Sections, apply to this Section.

1.2 SUMMARY

A. This Section includes TVSSs for low-voltage power, control, and communication equipment.

B. Related Sections include the following:
1. Division 26 Section "Panelboards" for factory-installed TVSSs.

1.3 DEFINITIONS

A. ATS: Acceptance Testing Specifications.

B. SVR: Suppressed voltage rating.

C. TVSS: Transient voltage surge suppressor.

1.4 SUBMITTALS

A. Product Data: For each type of product indicated. Include rated capacities, operating weights, operating characteristics, furnished specialties, and accessories.

B. Product Certificates: For transient voltage suppression devices, signed by product manufacturer certifying compliance with the following standards:
1. UL 1283.
2. UL 1449, Second Edition.

C. Field quality-control test reports, including the following:
1. Test procedures used.
2. Test results that comply with requirements.
3. Failed test results and corrective action taken to achieve requirements.

D. Operation and Maintenance Data: For transient voltage suppression devices to include in emergency, operation, and maintenance manuals.

E. Warranties: Special warranties specified in this Section.

1.5 QUALITY ASSURANCE

A. Source Limitations: Obtain suppression devices and accessories through one source from a single manufacturer.

© 2010 Gresham, Smith and Partners. All rights reserved. Use subject to any written agreement with Gresham, Smith and Partners.

B. Product Options: Drawings indicate size, dimensional requirements, and electrical performance of suppressors and are based on the specific system indicated. Refer to Division 01 Section "Product Requirements."

C. Electrical Components, Devices, and Accessories: Listed and labeled as defined in NFPA 70, Article 100, by a testing agency acceptable to authorities having jurisdiction, and marked for intended use.

D. Comply with IEEE C62.41, "IEEE Guide for Surge Voltages in Low Voltage AC Power Circuits," and test devices according to IEEE C62.45, "IEEE Guide on Surge Testing for Equipment Connected to Low-Voltage AC Power Circuits."

E. Comply with NEMA LS 1, "Low Voltage Surge Protection Devices."

F. Comply with UL 1283, "Electromagnetic Interference Filters," and UL 1449, second edition, "Transient Voltage Surge Suppressors."

G. Label components in compliance with NFPA 70, Article 285 with withstand ratings.

1.6 PROJECT CONDITIONS

A. Service Conditions: Rate surge protection devices for continuous operation under the following conditions, unless otherwise indicated:
1. Maximum Continuous Operating Voltage: Not less than 115 percent of nominal system operating voltage.
2. Operating Temperature: 30 to 120 deg F (0 to 50 deg C).
3. Humidity: 0 to 85 percent, noncondensing.
4. Altitude: Less than 20,000 feet (6090 m) above sea level.

1.7 COORDINATION

A. Coordinate location of field-mounted surge suppressors to allow adequate clearances for maintenance.

1.8 WARRANTY

A. Special Warranty: Manufacturer's standard form in which manufacturer agrees to repair or replace components of surge suppressors that fail in materials or workmanship within five years from date of Substantial Completion.

1.9 EXTRA MATERIALS

A. Furnish extra materials described below that match products installed and that are packaged with protective covering for storage and identified with labels describing contents.
1. Replaceable Protection Modules: One of each size and type installed.

© 2010 Gresham, Smith and Partners. All rights reserved. Use subject to any written agreement with Gresham, Smith and Partners.

PART 2 - PRODUCTS

2.1 MANUFACTURERS

A. Manufacturers: Subject to compliance with requirements, provide products by one of the following:
   1. Current Technology, Inc.
   2. Cutler-Hammer, Inc.; Eaton Corporation.
   3. General Electric Company.
   4. Innovative Technology, Inc.
   5. Square D; Schneider Electric.

2.2 PANELBOARD SUPPRESSORS

A. Surge Protection Device Description: Modular design with field-replaceable modules, sign-wave-tracking type with the following features and accessories:
   1. Integral disconnect switch.
   2. Redundant suppression circuits.
   3. Redundant modules.
   4. Arrangement with wire connections to phase buses, neutral bus, and ground bus.
   5. LED indicator lights for power and protection status.
   6. Audible alarm, with silencing switch, to indicate when protection has failed.
   7. One set of dry contacts rated at 5 A and 250-V, ac, for remote monitoring of protection status. Coordinate with building power monitoring and control system.
   8. Surge-event operations counter.

B. Peak Single-Impulse Surge Current Rating: 120 kA per phase.

C. Protection modes and UL 1449 SVR for grounded wye circuits with voltages of 208Y/120, 3-phase, 4-wire circuits shall be as follows:
   1. Line to Neutral: 400 V for 208Y/120.
   2. Line to Ground: 400 V for 208Y/120.
   3. Neutral to Ground: 400 V for 208Y/120.

2.3 ENCLOSURES

A. NEMA 250, with type matching the enclosure of panel or device being protected.

PART 3 - EXECUTION

3.1 INSTALLATION OF SURGE PROTECTION DEVICES

A. Install devices at service entrance on load side, with ground lead bonded to service entrance ground.

© 2010 Gresham, Smith and Partners. All rights reserved. Use subject to any written agreement with Gresham, Smith and Partners.

B. Install devices for panelboard and auxiliary panels with conductors or buses between suppressor and points of attachment as short and straight as possible. Do not exceed manufacturer's recommended lead length. Do not bond neutral and ground.
   1. Provide multipole circuit breaker as a dedicated disconnect for suppressor, unless otherwise indicated.

3.2 PLACING SYSTEM INTO SERVICE

A. Do not energize or connect panelboards to their sources until surge protection devices are installed and connected.

3.3 FIELD QUALITY CONTROL

A. Testing: Perform the following field tests and inspections and prepare test reports:
   1. After installing surge protection devices, but before electrical circuitry has been energized, test for compliance with requirements.
   2. Complete startup checks according to manufacturer's written instructions.
   3. Perform each visual and mechanical inspection and electrical test stated in NETA ATS, "Surge Arresters, Low-Voltage Surge Protection Devices" Section. Certify compliance with test parameters.

B. Remove and replace malfunctioning units and retest as specified above.

END OF SECTION 26 4313

© 2010 Gresham, Smith and Partners. All rights reserved. Use subject to any written agreement with Gresham, Smith and Partners.

Description

This section specifies the minimum requirements for fiber optic cable termination cabinets, pigtails patch cords and connectors furnished and installed on this Project as shown on the Plans or as directed by the Engineer. The termination cabinets are installed in the Equipment Racks serving as termination and distribution facilities.

Materials

Fiber Optic Termination Cabinet (FO Termination Cabinet)

1) Provide fiber optic termination cabinets in communications hubs, field junctions, and the Traffic Management Center (TMC) as shown in the Plans for termination of 288- fibers. (2 units of 144 fibers)
2) Use rack-mount termination cabinets designed to fit standard 19-inch EIA Equipment Racks.
3) Provide all mounting hardware and supports to mount the termination cabinets in the Equipment Cabinet. (See Equipment Cabinet Specification)
4) Use fiber optic termination cabinets providing one hundred and forty-four (144) fiber connectors and capable of storing one hundred and forty-four (144) fusion splices in splice trays.
5) Use termination cabinets that integrate the splice trays and connector modules into one compartment within one cabinet or houses the splice trays and connector modules in separate compartments integrated into one cabinet.
6) Maximum dimensions of a complete termination cabinet shall be seven (7) rack units high (12.25 inches) by sixteen (16) inches deep.
7) Use fiber optic termination cabinets with fully enclosed metallic construction and with a protective hinged front cover for the connector ports.
8) Provide cable access on all sides of the enclosed area behind the connector port panel.
9) Provide sufficient splice trays for storing two hundred and eighty-eight (288) fusion splices in twelve (12) or twenty-four (24) splice increments.

10) Provide termination cabinets with fiber optic connector modules in a twelve (12) fiber configuration of six (6) rows of one (1) duplex connector couplers. Twelve (12) modules per cabinet for a total of two hundred and forty-four (244) fibers per cabinet.

11) Connector modules shall mount vertically in the termination cabinet front panel.

12) Connector modules shall include clearly legible and permanent labeling of each of the twelve (12) fiber connector couplers and shall be labeled and identified.

13) Provide factory-assembled twelve (12) fiber termination interconnect cables (pigtail cables) to be fusion spliced to the outside plant cable and connected to the rear of the connector modules.

14) Termination interconnect (pigtail cables) cables shall be all-dielectric single jacketed cable with high tensile strength yarn surrounding twelve (12) individual nine hundred (900) micron fibers following EIA/TIA-598B color identification with factory-installed connectors.

15) Provide all incidental and ancillary materials, including, but not limited to, grommets, cable strain relief and routing hardware, blank connector panels, and labeling materials.

Fiber Optic Connectors

1) Provide fiber optic connectors compliant with this Specification for all fiber optic infrastructures, including, but not limited to, fiber optic termination cabinets and fiber optic patch cords.

2) Provide only factory-installed keyed LC compatible connectors for all single mode fiber optic connections. Do not use field-installed connectors. Do not use adapter couplers to change connector types.

3) Provide only factory-installed keyed ST compatible connectors for all multi-mode fiber optic connections. Do not use field-installed connectors. Do not use adapter couplers to change connector types.

4) Use factory-installed ceramic ferule connectors with a thermal-set heat-cured epoxy and machine polished mating face. Install connectors as per manufacturer application and recommendations, including proper termination to the outer-tubing (900 micron tubing, 3 mm fan out tubing, etc.) required for the application.

5) Use connectors rated for an operating temperature of -40°C to +75°C.
6) Provide connectors that have an installed insertion loss of less than 0.50 dB, a typical loss of 0.20 dB, and an optical return loss of greater than 45 dB.
7) Use simplex connectors for all male LC connectors. Provide latching cover for two male connectors being used in a duplex configuration. Female couplers may be duplex but must allow simplex mating connectors.
8) Label each fiber position on panels and termination cabinets containing duplex couplers with the port/position ID as shown in the Plans.
9) Provide dust caps for all exposed male connectors and female couplers at all times until permanent connector installation.

Installation

1) Two outside plant cables will be terminated in these cabinets. The first is a twelve (12) fiber single mode cable from the campus network. This cable connects the traffic department building to the street department building. Terminate it in the first twelve (12) positions of the first termination cabinet (Module A).
2) The second cable is the two hundred and four (204) single mode sixty (60) multi-mode trunk cable that connects the TMC to the field. Terminate the first one hundred and thirty-two (132) single mode fibers in the remaining eleven (11) modules of the first termination cabinet (Modules B thru M).
3) Terminate the next seventy-two (72) fibers of the field trunk cable in the second termination cabinet (Modules A thru F).
4) Terminate the sixty (60) multi mode fibers in the remainder of the second cabinet (Modules G thru L).
5) Fully test each termination and place those test results on a test sheet for each cable. Provide the Engineer with test results.
6) Connect all equipment with patch cords to the fibers that it was originally connected to in order to restore service.

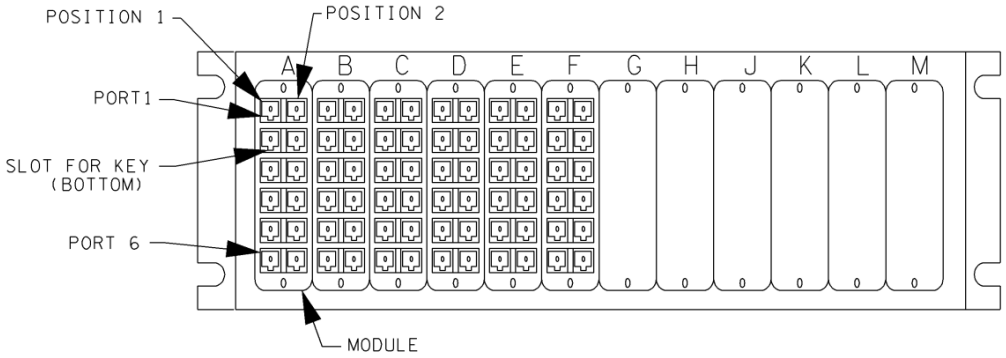

FO Termination Cabinet (Vertical Connector Module)

Fiber Optic Patch Cords

1) Provide fiber optic patch cords consisting of a length of fiber optic cable terminated on both ends.
2) All patch cords shall be factory pre-connected assemblies adhering to all applicable cable and fiber specifications stated in these Specifications.
3) Provide patch cords of the appropriate length for the necessary connections, maintaining minimum bend radius, and with no residual strain at the connector or anywhere on the patch cord itself beyond self-support. Patch cords shall not have excess length beyond what is necessary for equipment connection and routing.
4) All single mode patch cords shall be duplex zip-cord fiber cable with simplex LC connectors.
5) All multi-mode patch cords shall be duplex zip-cord fiber cable with simplex ST connectors.
6) The two connectors of each end of the patch cord shall be differentiated by different colors.
7) Provide sufficient flexibility at each end to disconnect one connector without disturbing the other or to allow swapping of the two connectors

within the same duplex coupler without disturbing the remainder of the patch cord.

8) Provide strain relief and reinforcement at the point where the duplex cable separates from the individual simplex connectors.
9) Fiber cable shall be 3mm jacketed cable with high tensile strength yarn protecting the inner fiber manufactured into a duplex zip-cord configuration. All Inside Plant (IP) patch cords shall meet NEC jacketing requirements.
10) Connector strain relief boots shall be fixed to the outer jacket and strength yarn.
11) Use yellow outer jackets for single mode fiber.
12) Use orange outer jacket for multi mode fiber.
13) No splices of any type are allowed within a patch cord assembly.
14) Fully test each patch cord assembly at the source of manufacture and place those test results on a test tag for each mated pair of connectors. Attach the associated tag to one end of each fiber within the duplex assembly.

Submittal Requirements

Contractor shall submit manufacturer's cut sheet detailing full compliance with this section prior to purchase of the covered equipment.

Description

This section specifies the minimum requirements for Equipment Racks and Power Distribution Units furnished and installed on this Project as shown on the Plans or as directed by the Engineer. The number of equipment racks that are shown in the plans and will contain the required electronic equipment and fiber optic cable interfaces.

Materials

The Equipment Racks shall meet the following material requirements:

1.	Net weight	275.20 lbs. (125.09 kg)
2.	Maximum height	78.39 inches (1991 mm)
3.	Maximum width	23.62 inches (600 mm)
4.	Maximum depth	42.13 inches (1070 mm)
5.	Net depth with stabilizing feet	50.30 inches (1278 mm)
6.	Weight capacity (static load)	3000.00 lbs. (1363.64 kg)
7.	Weight capacity (dynamic load)	2250.00 lbs. (1022.73 kg)
8.	Minimum mounting depth	7.52 inches (191 mm)
9.	Maximum mounting depth	36.02 inches (915 mm)
10.	Rack height	42U
11.	Color	Black
12.	Vertical posts	16 gauge
13.	Front door	16 gauge
14.	Rear door	18 gauge
15.	Roof	18 gauge
16.	EIA mounting rails	14 gauge
17.	Side panels	18 gauge

18. All and necessary cable management and baying hardware included
19. Documentation shall be provided
20. Key(s), keyed-alike doors and side panels

Conformance

1.	Regulatory approvals	EIA-310-D
2.	Standard warranty	5 year repair or replace
3.	Standards	UL 60950

Rack Power Distribution Units

Provide Power Distribution Units meeting the following minimum requirements:

1.	Nominal output voltage	120V
2.	Maximum total current draw per phase	12A
3.	Output connections	NEMA 5-15P
4.	Nominal input voltage	100V, 120V
5.	Input frequency	50/60 Hz
6.	Input connections	NEMA 5-15 P
7.	Cord length	12 feet (3.66 meters)
8.	Number of power cords	1
9.	Maximum line current per phase	1440A
10.	Maximum input current per phase	15A

Physical Dimensions of Power Distribution Unit

1.	Maximum height	1.74 inches (44 mm)
2.	Maximum width	17.47 inches (444 mm)
3.	Maximum depth	4.03 inches (102 mm)

Environmental

1.	Operating environment	23 - 113 °F (-5 - 45 °C)
2.	Operating relative humidity	5 - 95%

Conformance

1.	Regulatory approvals	
2.	UL listed	
3.	CSA	
4.	FCC Part 15 Class A	
5.	ICES-003	
6.	VCCI	
7.	Standard warranty	2 years repair or replace

Submittal Requirements

1. Contractor shall submit manufacturers' cut sheet detailing full compliance with this section prior to purchase of the covered equipment.

Description

1. This section illustrates and describes the requirements for the TMC consoles for the City of Johnson City' TMC.

Materials

1. The Contractor shall provide the services and equipment necessary to assemble and integrate new Traffic Management Center consoles as per the requirements illustrated and stated in this Technical Special Provision (TSP).

2. There shall be two consoles of different dimensions to accommodate the operators for the City of Johnson City as show in the plans and this TSP. There shall also be a custom millwork over head storage a unit installed. See console drawings this section for details.

3. The consoles and millwork storage units shown in the drawings are of a specific type, function and finish as required by the City.

Requirements for Consoles

1. The laminate front and rear panels shall give the console a contemporary appeal with cutting-edge cladding design and color options.

2. The console shall be designed with the consideration of accepted Human Factors guidelines and applicable ergonomic standards including ANSI/BIMFA, CSA, and ISO.

3. The console shall have the ability to have flat screen monitors and various desk accessories mounted on the rear wall. Wall height shall be 6" (153 mm),. The wall design should be configured to accommodate equipment mounting.

4. The console shall accommodate the computer workstations specified in the specification book with a variety of optional processor shelves. The computer cavities shall be ventilated with thermostatically controlled brushless fans to prevent overheating of the CPU's. The Contractor is responsible to ensure the provided Workstations will fit and operate in the space provided in the consoles. The Contractor is responsible for providing the proper length cables for mouse, keyboard, and monitors.

5. The console shall provide convenient open cable chases that run uninterrupted to adjacent desks in the upper and lower portion of the base units. The integrated cable tray shall be accessible by removing the access panel on the work surface. The standard finish for the monitor deck is high plastic laminate (HPL) on both sides of the work surface. Cable management options accommodate electrical and data service as shown on the plans. Termination boards shall be used to mount outlets and jacks.

6. The work surface shall be designed to provide a smooth, level work area, while complying with accepted human factors criteria. All applicable ergonomic standards shall be taken into consideration, including view and reach distances, keyboard height, and knee-well space.

Submittals

The contractor shall supply the following to obtain project level approval:

1. Copy of ISO 9001 Certification.
2. Detailed CAD (PDF format) drawings of console and equipment layouts for coordination of site measurements, architectural, mechanical, and electrical project elements for each console type.
3. Detailed CAD (PDF format) drawings of each console type with its specific equipment per application.
4. Renderings of consoles with millwork and room upon request.
5. Pre-production review, to include a drawing submittal and component listing complete with samples of selected finish materials for consoles and millwork upon request.
6. Detailed explanation of any deviations from this specification or plan set drawings.

Console Material Specifications

1. The consoles must be of modular design, facilitating future equipment retrofits and full reconfigurations without requiring any major modification to the structure or exterior elements.

2. The console structure, sub structure and frame must form a freestanding unit independent of the exterior cladding.
3. The consoles must be manufactured to industry recognized ISO 9001 quality standards.

Ergonomics and Operator Safety

1. Consoles shall be designed in accordance with the ergonomic standards of ISO,ANSI, BIFMA and CSA
2. The work surface platform shall have smooth edges and transitions, thus avoiding sharp corners or potential "rib catchers" for operator safety.
3. Sharp edges at the console base and in CPU cavities are not acceptable and represent potential "knee-banger" operator safety issues. All transitions and curves shall have a minimum 5-inch radius.

Console Frame Structure

1. All sheet metal used for structural components shall be cold rolled steel.
2. Components ensure square, rigid connection of the front portal to the rear frame assembly, module-to-module connections at corner positions, and attachment of front, rear and end panels.
3. All sheet metal parts must be finished with a durable, black, electrostatic powder coating.

Work surfaces and Panels

1. Panels and work surfaces shall have the following properties:
   A. Materials: Not less than 1" (25mm) particleboard, high-pressure laminate surface.
   B. Finish - Horizontal grade laminate.
   C. Static Load: Not less than 50-lb./ linear ft.(MAXIMUM 250 lb. Per surface on Adjustable Work surfaces)
   D. Surface to Floor Distance Fixed 29" (737 mm) 27 ½" (692 mm) clearance

2. Panels shall have the following properties:

A. The console must offer hinged clipped panels as an option for front and back. Hinged panels will hinge from the column.

3. Rounded Polyurethane Work surface Nosing
   A. Polyurethane foam secured over an aluminum extrusion carrier.
   B. Comfortable and ergonomically sound.
   C. Allows for curved sections with a 14 in radius.
   D. An edge slope and radius spreads the weight over a larger surface. Enhancing end user comfort.

Console and Millwork Drawings

1) The attached drawings illustrates the type and required dimensions needed as minimum performance criteria for the City of Johnson City's TMC consoles and millwork:

Installation Requirements

1. The Contractor will be responsible for the assembly of the consoles at the TMC and that the consoles are in proper working order per the City of Johnson City.
2. Installation of the custom millwork overhead storage units is the responsibilities of the contractor including all hard ware necessary for mounting units to wall.
3. Modules shall be able to be assembled using standard tools without any site cutting or drilling. Each module shall be rigid and self-supporting to permit individual removal, relocation or modification of adjacent modules.

Warranty

1. Vendor shall provide the following minimum warranty terms against defects and workmanship:
   A. A. LIFETIME WARRANTY on all fixed structural frame components.
   B. All static exterior panels and work surface components for a period of not less than five (5) years.
   C. All adjustable, sliding or hinged mechanisms or parts for a period of not less than one (1) years.

STRATEGY ™ CLASSIC COLLECTION

CONSOLE FINISH SCHEDULE

1.0 Rear Enclosure Panels – P.Lam.: _____

2.0 Front Enclosure Panels – P.Lam.: _____

3.0 Worksurface & Raceway Cover – P.Lam.: _____

4.0 End Panels – P.Lam.: _____

5.0 End Panel Accent – MDF, Painted: Plastofix Black

6.0 Nosing – Injection Molded Rubber on Extruded Aluminum Profile: Black

7.0 Nosing End Caps – MDF, Painted: Plastofix Black

8.0 Rear Stringer – Powder Coated: Black

9.0 Steel Support Legs – Powder Coated: Black

10.0 Hole Plugs – Black Plastic

* NOTE: ALL INTERIOR FACES OF PANELS ARE WILSONART BLACK
** TYPICAL CONSOLES ARE SHOWN ONLY **

* NOTE: MILLWORK FINISHES MATCH PANEL FINISHES UNLESS NOTED OTHERWISE

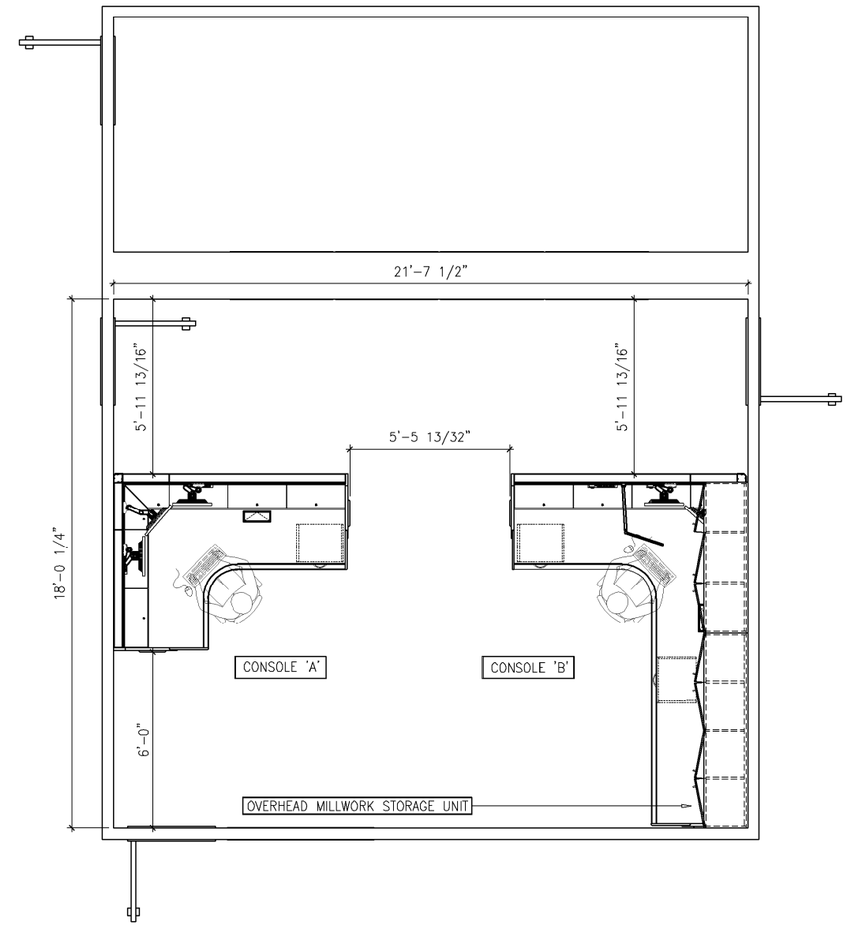

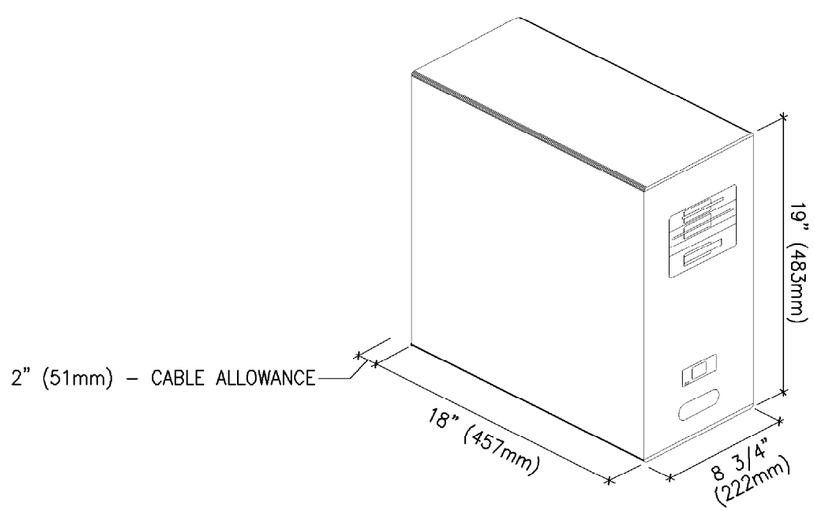

MAXIMUM TOWER PROCESSOR (FOR RD FIXED PROCESSOR SHELF)

FINISH SCHEDULE & MAX. EQUIP.
SCALE: NTS

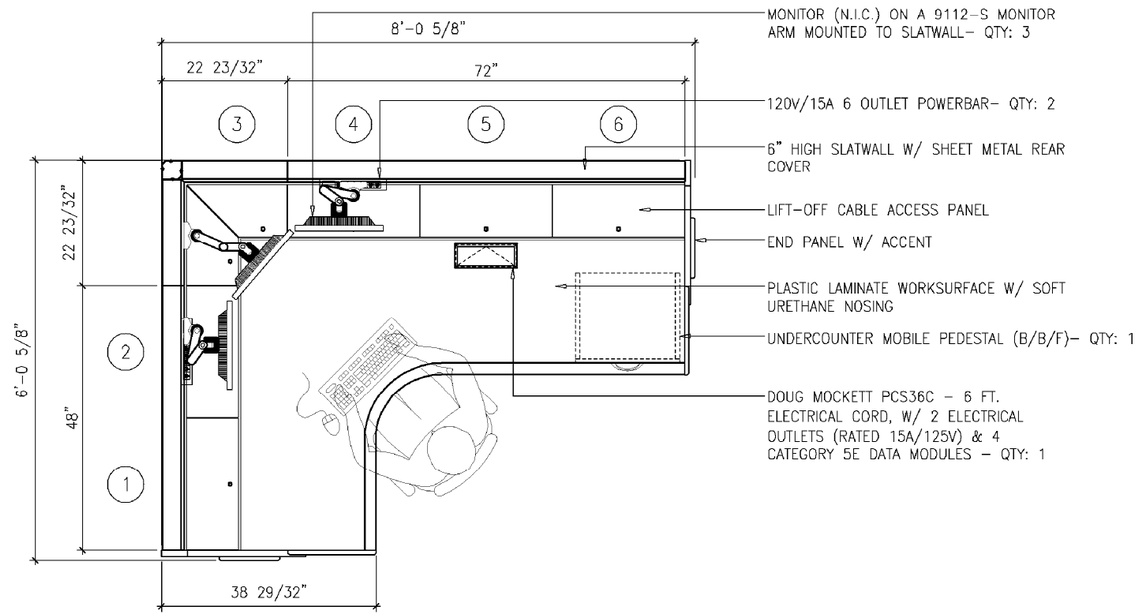

CONSOLE 'A' LAYOUT - QTY: 1
SCALE: 1/2"=1'-0"

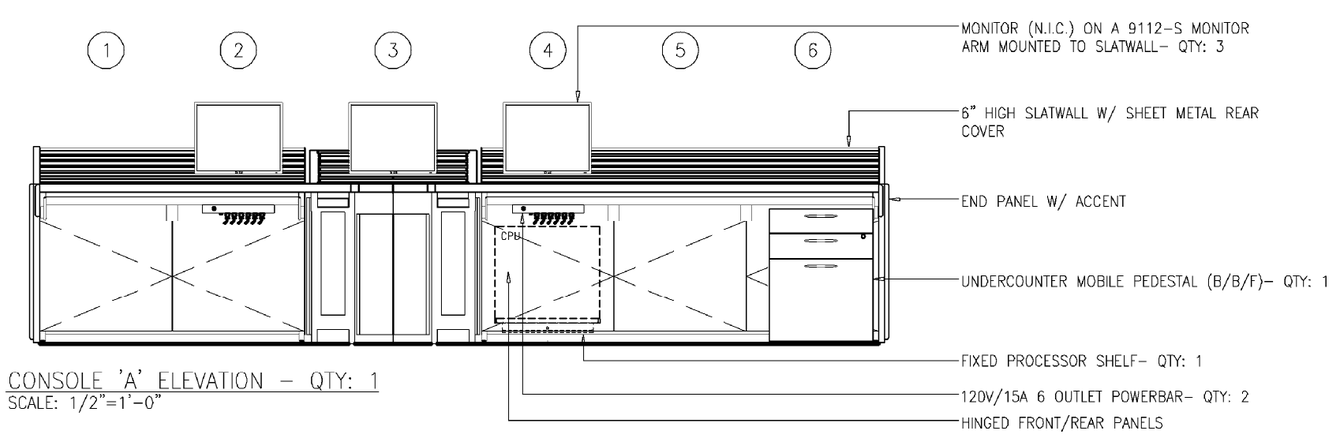

CONSOLE 'A' ELEVATION - QTY: 1
SCALE: 1/2"=1'-0"

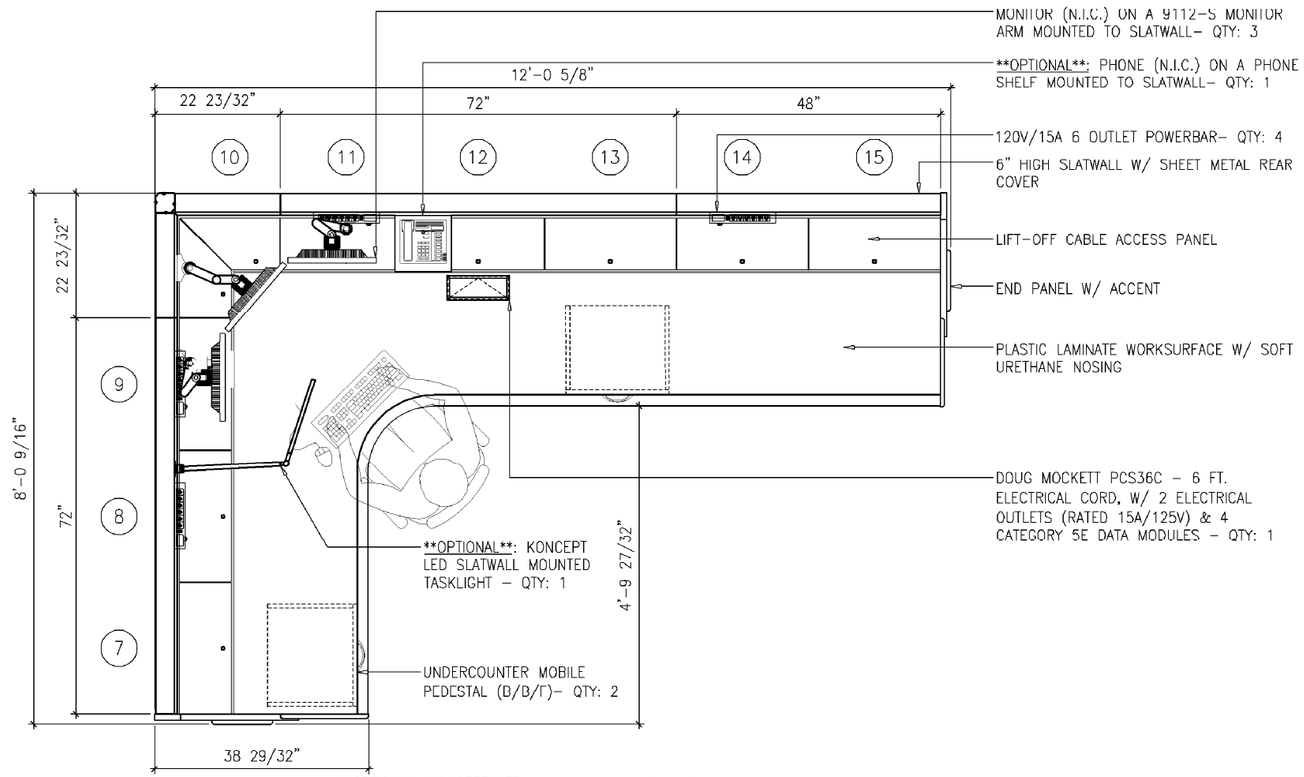

CONSOLE 'B' LAYOUT - QTY: 1
SCALE: 1/2"=1'-0"

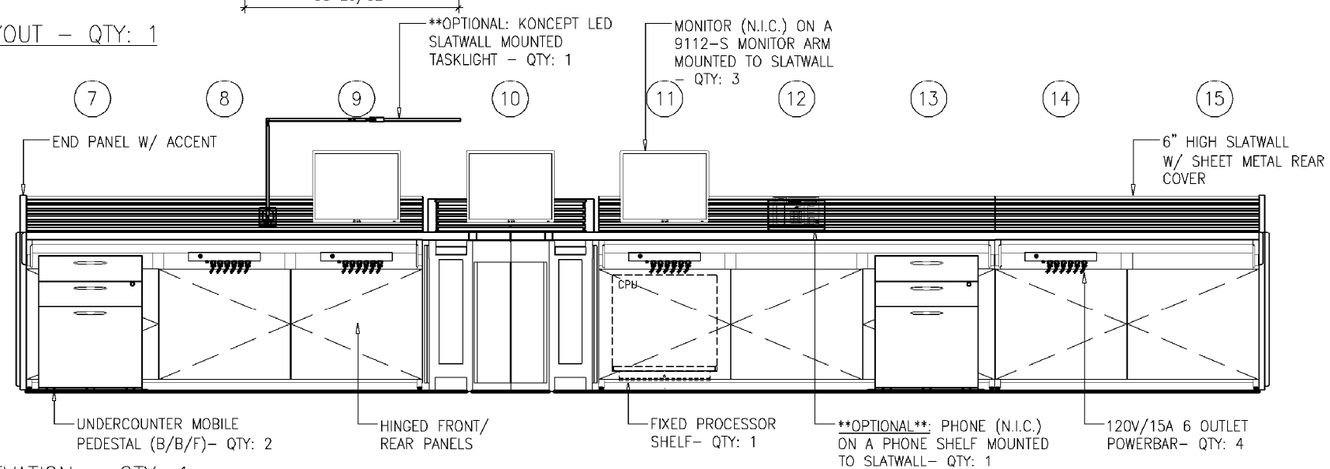

CONSOLE 'B' ELEVATION - QTY: 1
SCALE: 1/2"=1'-0"

NOTE: ALL ELECTRONIC EQUIPMENT, SHOWN FOR REPRESENTATIONAL PURPOSES, ARE PROVIDED BY OTHERS, UNLESS SPECIFIED OTHERWISE.

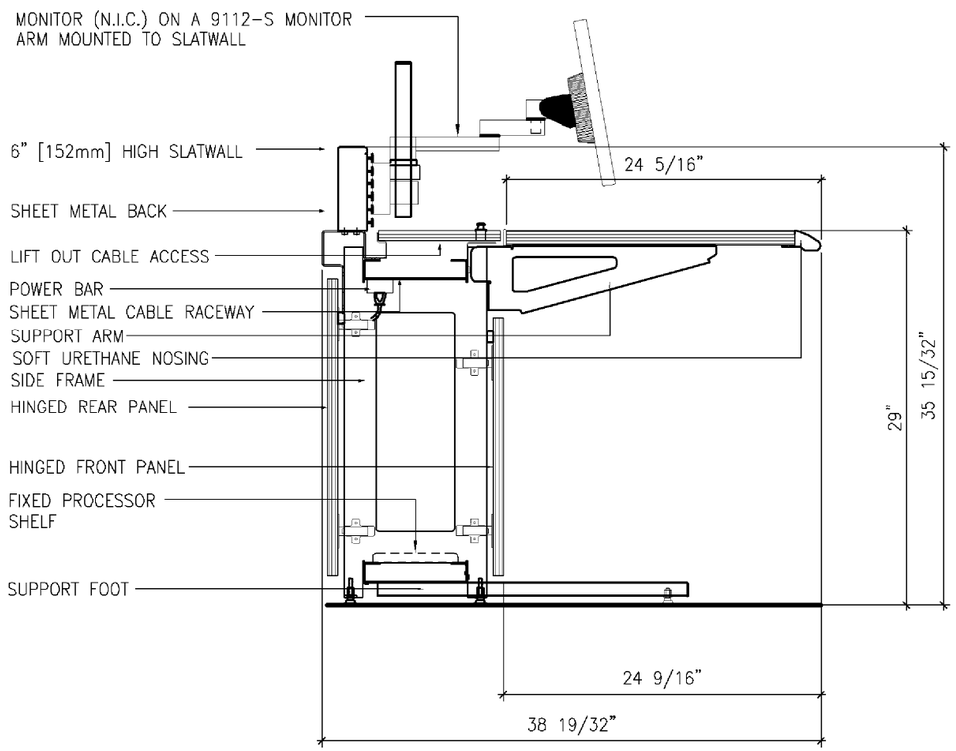

TYPICAL CONSOLE SECTION
SCALE: 1"=1'-0"

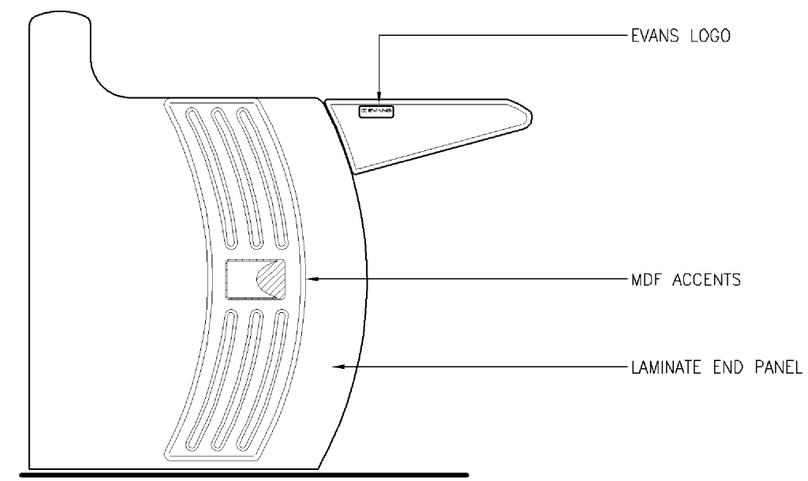

END PANEL ELEVATION
SCALE: 1"=1'-0"

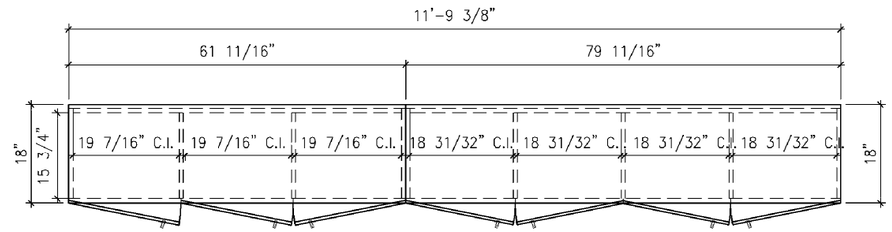

PLAN VIEW

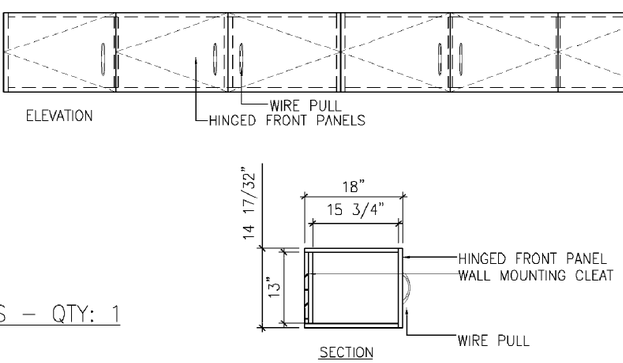

SECTION

CUSTOM MILLWORK OVERHEAD STORAGE UNIT DETAILS – QTY: 1
SCALE: 1/2"=1'-0"

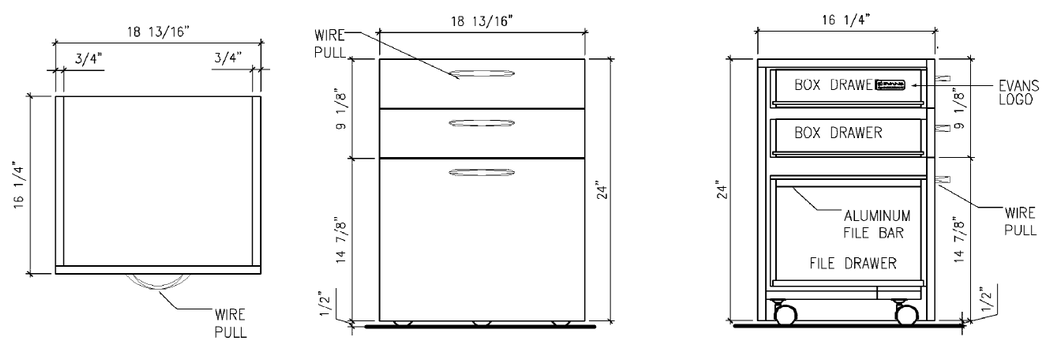

PLAN VIEW

ELEVATION

SECTION

MOBILE PEDESTAL DETAILS – QTY: 3
SCALE: 1"=1'-0"

Description

1) This section describes the LED monitor specifications and requirements for this Project. The work consists of installing a video array wall inside the Streets department conference room and providing all labor, materials, software and incidentals necessary to furnish, install, integrate, test and make functional upgrades. The work includes all additional licensing, documentation and training necessary to operate the system as required.

Materials

General Requirements

1) The Traffic Management Center (TMC) LED monitors procured and installed under this Contract shall support daily operation and maintenance activities associated with the City of Johnson City Intelligent Transportation System (ITS).

2) The contractor is responsible for the construction of a video monitor display in the Street Department Building. Four (4) 32 inch monitors and One (1) 55 inch monitor shall make the video array. All equipment shall be new and installed in accordance with the manufacture specification. The system shall include one (1) workstation as described in the Specification Manual. The Contractor is responsible for all cabling and construction materials to make a complete and operational system. The monitors will display video images from Traffic cameras and computer generated maps of the City as required by streets department engineer. The 55 inch monitor shall have audio capability allowing presentations from the workstation or network to include audio.

3) It is expected that four (4) 32” LED monitors and one (1) 55” LED monitor will be configured, integrated, and tested by the Contractor. All monitors shall include a manufacturer’s warranty with at least one (1) year parts and labor along with free lifetime technical support.

Technical Specifications

1) The 32” LED monitors shall meet the following specifications:

A) Display Size (diagonal): 32”

B) Native panel resolution: 1920 x 1080 pixels

C) Signal compatibility: 1080P (FHDTV), 1080i (HDTV), 720P (HDTV), 480P (EDTV), 480i (SDTV)

D) Number of colors: 1.06 billion

E) Dynamic contrast ratio: 50,000:1

F) Brightness: 500 cd/m²

G) Response time: 6ms

H) Viewable Angle: 178º/178º (horizontal/vertical)

I) Pixel/ Dot Pitch: 0.363 mm (H) x 0.363 mm (V)

J) Lamp Life: 50,000 hours

K) Rear Inputs:

1) 3x HDMI with HDCP

2) 1x RF (connector for internal tuner)

3) 1x component YPbPr plus Stereo Audio

4) 1x composite video plus 1x S-Video (shared stereo audio)

5) 1x RGB plus stereo audio

L) Side Inputs:

1) 2x multimedia USB

M) Outputs:

1) 1x SPDIF (optical) audio

2) 1x stereo audio

N) Additional features:

1) Picture-in-Picture (PIP)

2) Picture-against-Picture (PAP)

2) Wall mount specifications for the 32" LED monitors:

A) Hole Pattern: 200 mm x 200 mm

B) Screw size: M6

C) Screw length: 25 mm/16 mm (upper/lower)

D) Screw pitch: 1.0 mm

3) The 55" LED monitor shall meet the following specifications:

A) Display Size (diagonal): 55"

B) Native panel resolution: 1920 x 1080 pixels

C) Signal compatibility: 1080P (FHDTV), 1080i (HDTV), 720P (HDTV), 480P (EDTV), 480i (SDTV)

D) Number of colors: 1.06 billion

E) Dynamic contrast ratio: 2,000,000:1

F) Brightness: 500 cd/m²

G) Response time: 5ms

H) Viewable Angle: 178º/178º (horizontal/vertical)

I) Pixel/ Dot Pitch: 0.630 mm (H) x 0.630 mm (V)

J) Lamp Life: 40,000 hours

K) Rear Inputs:

1) 3x HDMI with HDCP

2) 1x RF (connector for internal tuner)

3) 1x component YPbPr plus Stereo Audio

4) 1x composite video plus 1x S-Video (shared stereo audio)

5) 1x RGB plus stereo audio

6) 1x Ethernet

L) Side Inputs:

1) 1x HDMI with HDCP

2) 2x multimedia USB

M) Outputs:

1) 1x SPDIF (optical) audio

2) 1x stereo audio

N) Additional features:

1) Picture-in-Picture (PIP)

2) Picture-against-Picture (PAP)

4) Wall mount specifications for the 55" LED monitor:

A) Hole pattern: 300 x 300

B) Screw size: M8

C) Screw length: 25 mm

D) Screw Pitch: 1.25 mm

Installation Requirements

1) The Contractor will be responsible for assembly of the LED monitors in accordance with the manufacture specification.. The Contractor will be responsible for the following items:

   A) Mechanical setup of the new wall, including assembly of the displays and mounts.

   B) Connection of the workstation to the network

   C) Connection of the monitors to the workstation using DVI-D to HDMI cables.

   D) All cables shall be clearly marked indicating source and destination. Markings shall be on both ends of each cable.

   E) Connection of workstation audio output to the 55 inch display

Submittal Requirement

1. The Contractor shall submit cut sheets on all items including the interface cables to the Engineer for approval prior to purchase of any equipment.

2. Contractor shall submit wiring layout including cable routing to the Engineer for approval.

Testing

General Requirements

1) Demonstration of all required features operates completely.

2) Demonstration that monitors operate with existing system through the workstation.

Section 18
PROJECT ACCEPTANCE

18.1 Description

This section specifies the minimum requirements for acceptance procedures and tasks that must be completed prior to project acceptance. These items include the project testing program, burn-in period, training, warranties, project submittals, system documentation, and as-built documentation.

18.2 Task Requirements

18.2.1 Project Testing Program

The project testing program requirements and acceptance procedures are outlined in Section 1.5 of this TSP. Additional specific testing requirements are detailed in the individual TSP sections.

The burn-in period requirements are outlined in Section 1.5.6 of this TSP.

18.2.2 Training

The training requirement minimums are outlined in Section 1.6 of this TSP. Additional specific training requirements are detailed in the individual TSP sections.

18.2.3 Warranties

The warranties requirements are outlined in Section 1.7 of this TSP. Additional specific warranty requirements are detailed in the individual TSP sections.

18.2.4 Project Submittal Program

The project submittal program requirements are outlined in Section 1.8 of this TSP. Additional specific submittal requirements are detailed in the individual TSP sections.

18.2.5 System Documentation

The system documentation requirements are outlined in Section 1.9 of this TSP. Additional specific system documentation are detailed in the individual TSP sections.

18.2.6 As-Built Documentation

1) Prior to the Conditional System Acceptance Tests, all Department approved changes shall be incorporated by the Contractor into all submitted documents and drawings, including the project Plans. Copies of the updated drawings shall be submitted to the Department to serve as the final as-built configuration drawings.

In the Project Plans, each drawing shall be identified under the sheet number block, with the words "AS-BUILT", the date and the approval. The as-built drawings shall consist of a neatly marked-up set of plans using a red permanent marker. The drawing shall indicate the as-built location of all equipment including but not limited to; poles, cabinets, conduit, pull boxes, gates, etc.

2) As part of the as-built drawings, the contractor shall use a hand-held GPS unit to determine the sub-meter GPS Coordinates (in a format approved by the engineer) for all standalone devices, structures and outside plant infrastructure including field devices, poles, pull boxes, equipment cabinets, etc. These coordinates shall be summarized in a GPS Coordinates Database in a Microsoft Excel or Access table that indicates the following minimum information:

3) Device/equipment name and number (where applicable)

4) Roadway name and station number

5) Sheet number in Plans

6) GPS coordinates

7) In addition to submitting an original hardcopy of the AS-BUILT drawings, the Contractor shall also submit a high resolution scanned image of each AS-BUILT sheet. High Quality scanned images shall be submitted on a CD in a format approved by the Engineer.

8) As-built documentation shall be prepared and submitted in the following two stages:

9) Preliminary as-built documentation shall include all materials, devices and infrastructure included in this contract. Preliminary as-built documentation shall be submitted and approved prior to requesting the Conditional System Acceptance Test.

10) Final as-built documentation shall be an update reflecting any changes that occurred during the burn-in period. Final as-built documentation shall also include installation data forms provided by TDOT to the Contractor throughout the project that shall be completed by the Contractor. These forms require various information such as cable length IDs into and out of each pullbox, site specific information, etc. Final as-built documentation shall be submitted and approved as part of the Final Inspection.

11) As part of the as-built drawings, the Contractor shall also submit a complete System Equipment Inventory of all equipment utilized on the project. The Contractor shall create and maintain the System Equipment Inventory as a Microsoft Access database. The System Equipment Inventory shall include GPS coordinate information from the as-built documentation. As an alternate, the GPS Coordinates Database and the System Equipment Inventory may be combined in one relational database provided that all required data components are maintained.

12) As a minimum, the System Equipment Inventory shall include the following information about each equipment item:
    a. Device/equipment item name
    b. Pay item number
    c. Location (station and device ID)
    d. Sheet number in Plans
    e. Sub-meter GPS coordinates
    f. Make, model and mfr part number
    g. Serial number
    h. Revision ID i.
    Firmware ID
    j. Purchase date
    k. Installation date
    l. Manufacturer contact information
13) The Contractor shall provide project submittals for as-built documentation in accordance with the requirements in Section 1.8 of this TSP. The project submittals for as-built documentation shall include but are not limited to the following:
14) GPS Coordinates Database (template shall be submitted for approval)
15) System Equipment Inventory (template shall be submitted for approval)
16) Beginning with the first activities of field construction, all as-built documentation, including but not limited to updated drawings, completed installation data forms, GPS Coordinates Database and System Equipment Inventory, shall be kept up-to-date on a weekly basis and shall be made available for review by the Engineer upon request.

18.3 Measurement

18.3.1 Project Testing Program

Project testing shall be included in the cost of other pay items and will not be measured separately for payment, except for burn-in period as specified herein.

18.3.2 Training

The Training item shall be a lump sum item and shall include all labor, equipment, materials, travel, facilities, production and reproduction, and miscellaneous items needed to conduct the training as specified.

18.3.3 Warranties

Warranties shall be included in the cost of other pay items and will not be measured separately for payment.

18.3.4 Project Submittal Program

Project submittals shall be included in the cost of other pay items and will not be measured separately for payment.

18.3.5 System Documentation

System documentation shall be included in the cost of other pay items and will not be measured separately for payment.

18.3.6 As-Built Documentation

As-built plans shall be a lump sum item and shall include all labor, equipment, materials, production and reproduction, and miscellaneous items needed to produce the as-built plans as specified.

18.4 Payment

The contract unit price shall be full compensation for all work specified in this section.

Payment will be made under:

Item No.	Description	Unit
725-07.63	As-Built Plans	LS
725-07.67	Training	LS

As-Built Documentation will be paid on a lump sum basis as follows:

90% of the contract unit price for approved as-built documentation prior to Conditional System Acceptance.

Final 10% of the contract unit price upon Final System Acceptance.

Training will be paid on a lump sum basis as follows:

100% of the contract unit price upon completion of required training.